United States Patent

[11] 3,569,640

[72] Inventor **Robert G. Suntheimer**
Hastings, Mich.

[21] Appl. No. **831,629**
[22] Filed **June 9, 1969**
[45] Patented **Mar. 9, 1971**

[73] Assignee **Gulf & Western Industrial Products Company**
Grand Rapids, Mich.

[54] **LIMIT SWITCH ASSEMBLY FOR PRESS SLIDE ADJUSTMENT**
5 Claims, 5 Drawing Figs.

[52] **U.S. Cl.** **200/47**
[51] **Int. Cl.** **H01h 21/28**
[50] **Field of Search** ..... 200/47, 167 (A), 153.19; 318/466 (T); 192/142, 150

[56] **References Cited**
UNITED STATES PATENTS

2,522,222	9/1950	Haller	200/47X
3,247,732	4/1966	Barnhart	200/47X

Primary Examiner—Robert K. Schaefer
Assistant Examiner—H.J. Hohauser
Attorney—Meyer, Tilberry & Body

ABSTRACT: A limit switch assembly for use in positioning a press slide. The press is of the type in which the slide is raised or lowered by means of one or more adjusting screws. Connected to one of the adjusting screws is a rack bracket having a rack end spaced from the screw and oriented generally parallel with movement of the slide. The latter supports a pinion which engages the rack end and is rotated with movement of the slide relative the adjusting screw. Rotatable with the pinion is a cam which engages one of two limit switches.

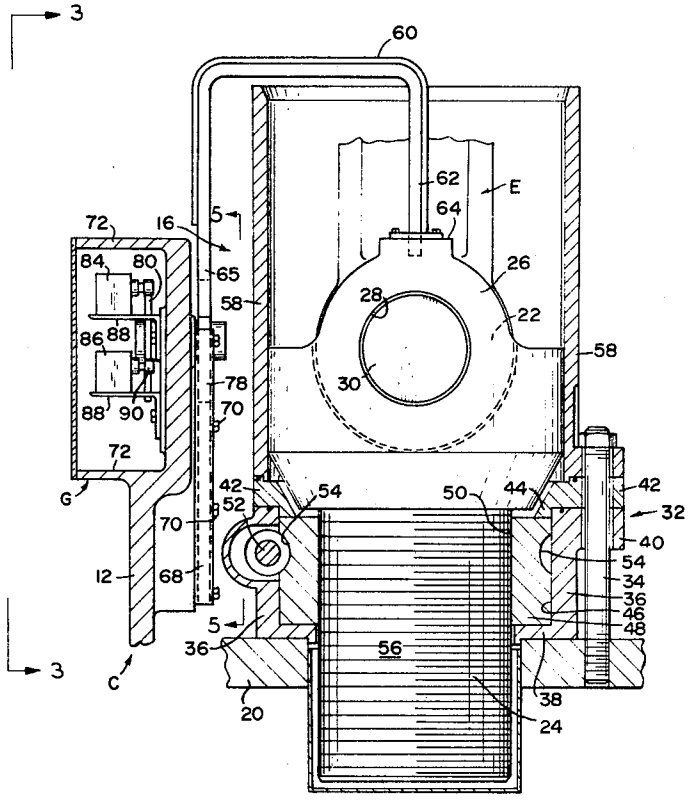

FIG. 1

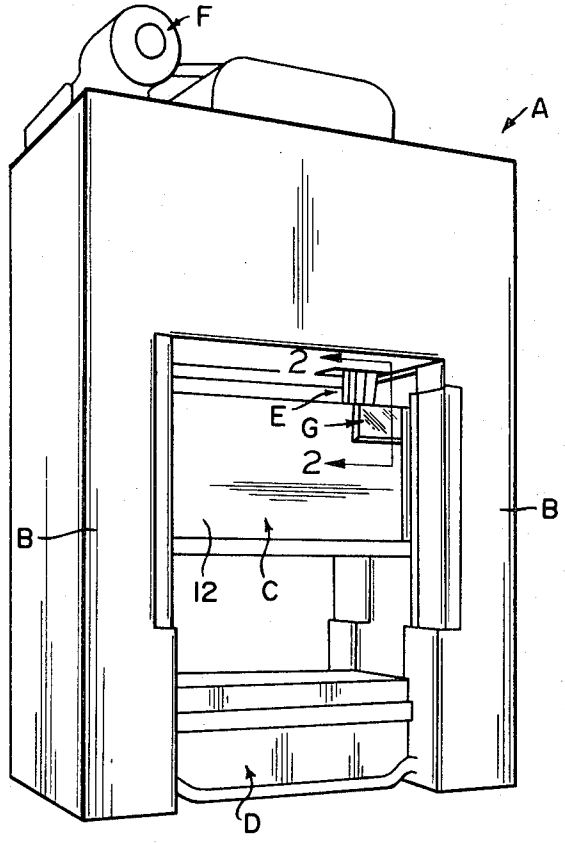

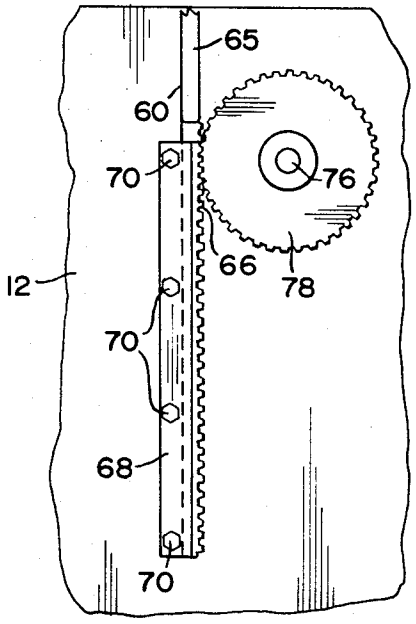

FIG. 5

INVENTOR.
ROBERT G. SUNTHEIMER
BY
Meyer, Tilberry & Body
ATTORNEYS

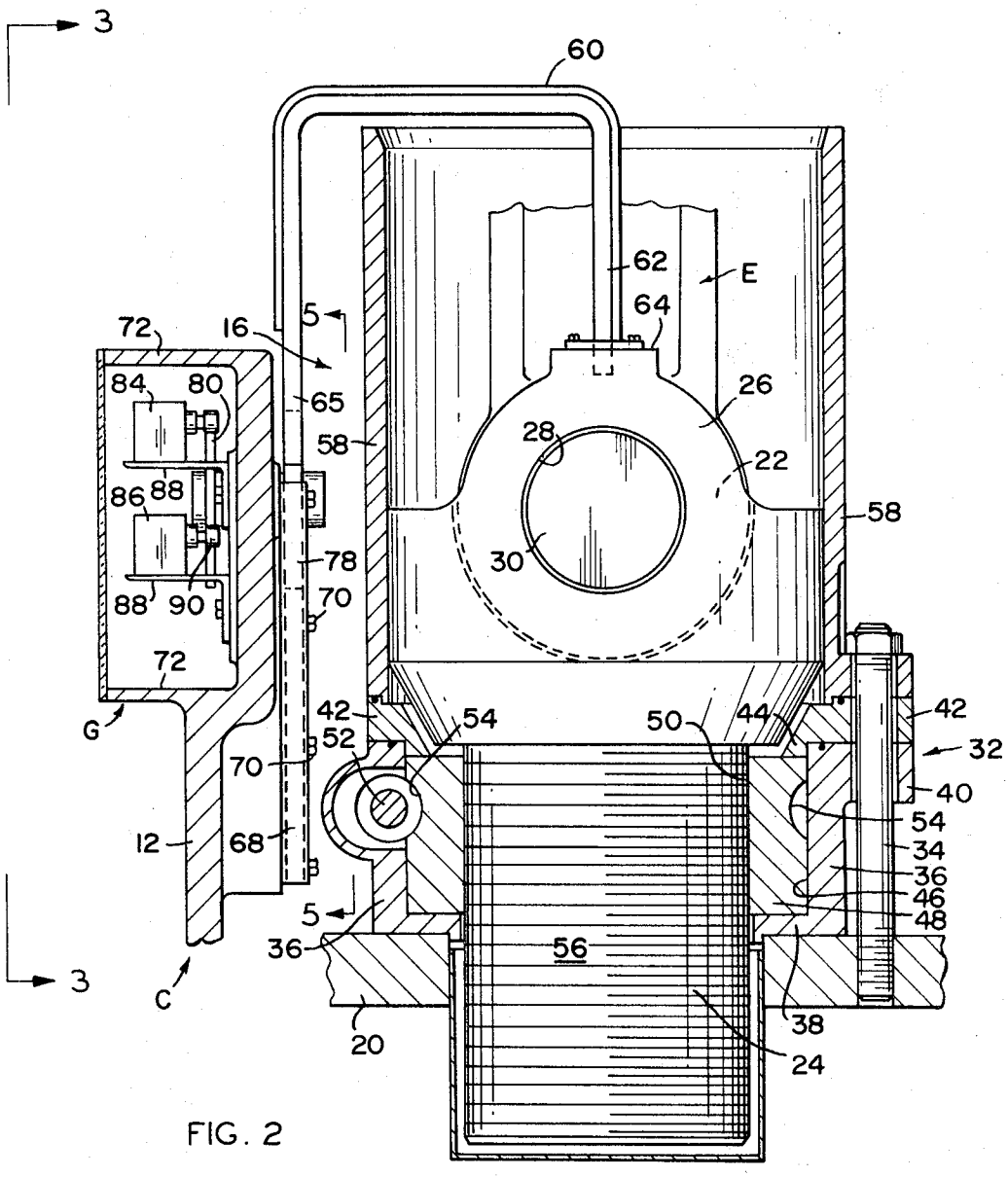

FIG. 2

INVENTOR.
ROBERT G. SUNTHEIMER

BY
Meyer, Tilberry & Body
ATTORNEYS

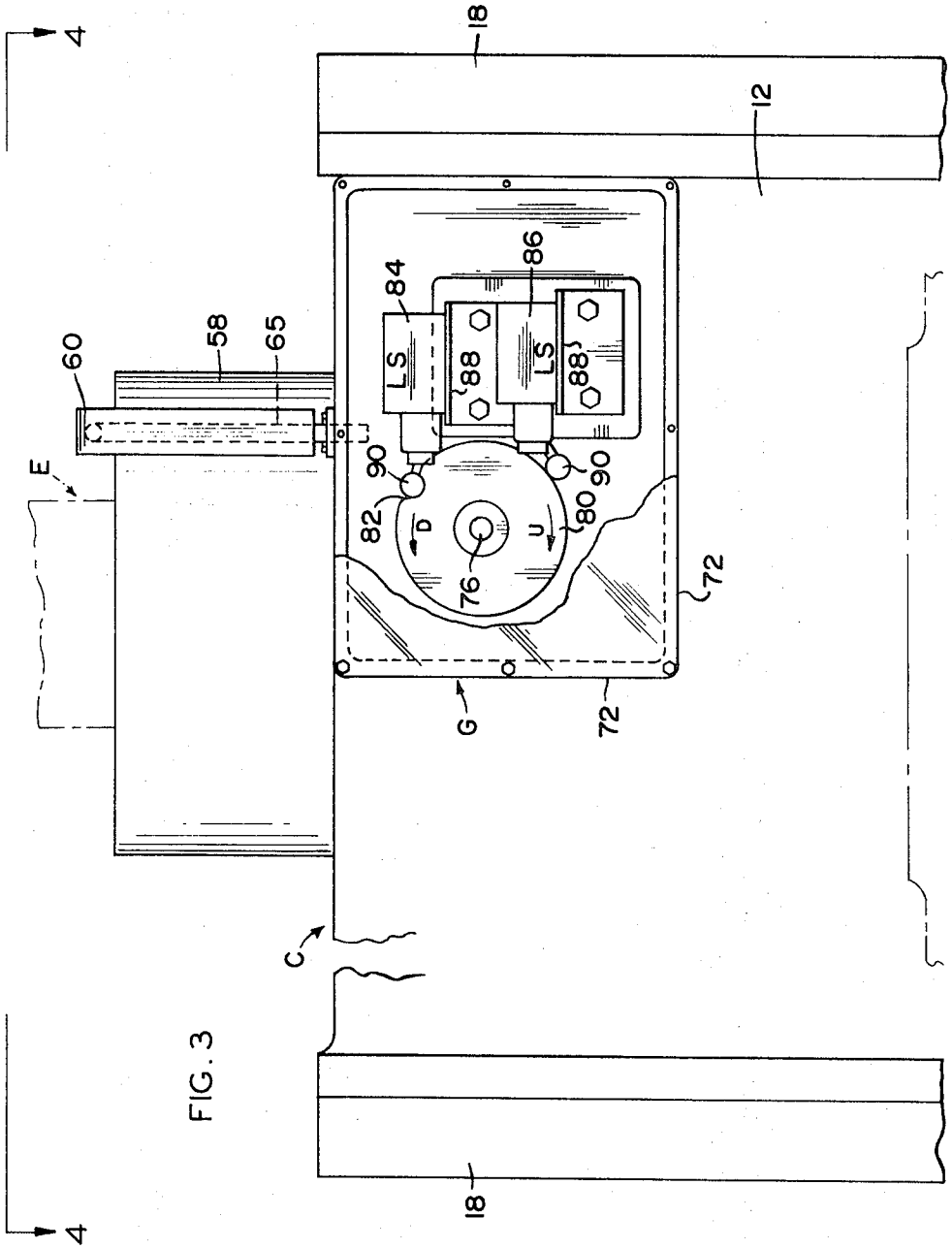

FIG. 3

INVENTOR.
ROBERT G. SUNTHEIMER

BY
Meyer, Tilberry & Body
ATTORNEYS

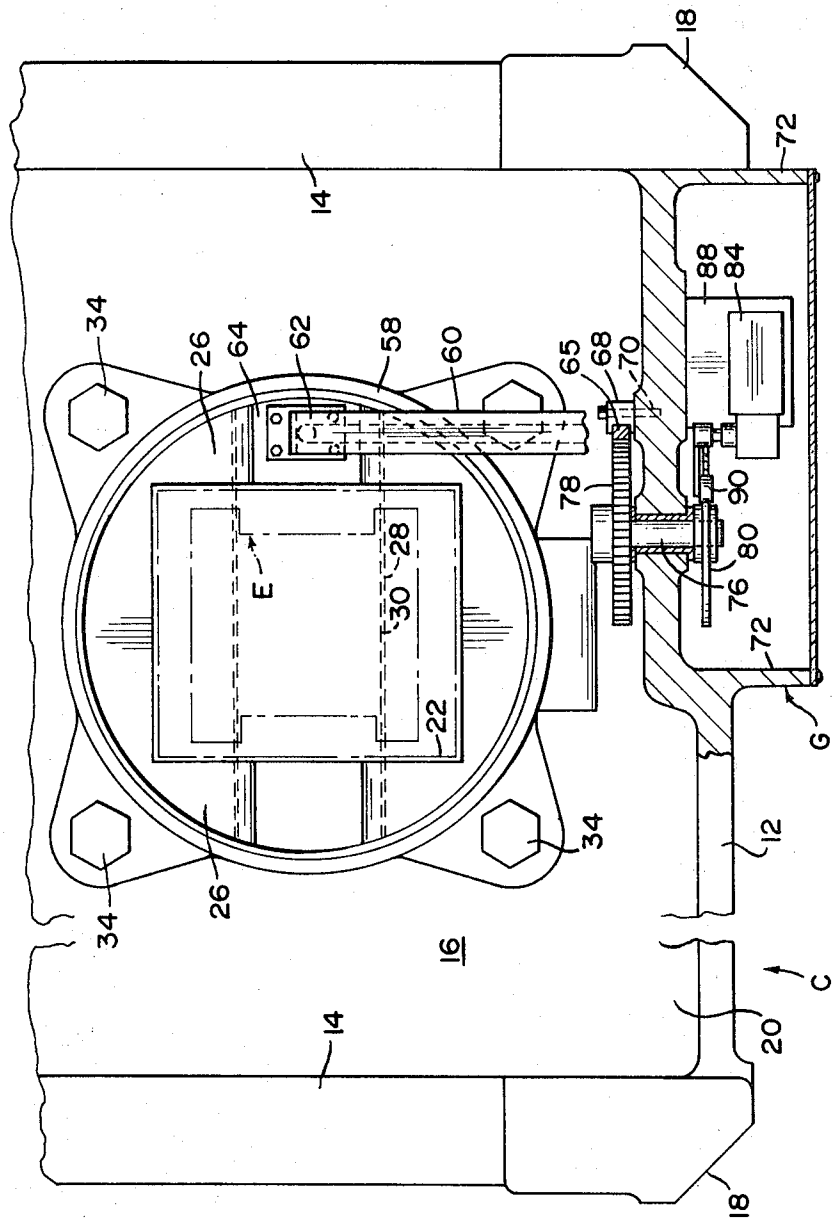

FIG. 4

INVENTOR.
ROBERT G. SUNTHEIMER

BY
Meyer, Tilberry & Body
ATTORNEYS

LIMIT SWITCH ASSEMBLY FOR PRESS SLIDE ADJUSTMENT

The present invention relates to the art of presses, and in particular to a limit switch assembly for use in positioning a press slide.

In presses of the type to which the present invention relates, the press slide is reciprocated towards and away from the press bed by means of a press drive, usually positioned at the top of the press. One or more rods or connections lead from the press drive to the slide. Frequently, it is desirable to adjust the stroke of the press slide prior to operation of the press, that is, to move the slide towards or away from the press bed, and for this purpose, the rods or connections are fastened to the slide through one or more adjusting screws. These screws are threaded into an adjusting nut which is rotatably seated in the slide. A motor on the slide rotates the adjusting nut, through a worm shaft, advancing the adjusting screw into or out of the slide, and raising or lowering the slide relative to the press drive and press bed.

In order to position the press slide at a predetermined or desired elevation, that is, to stop the adjusting motor at a desired point, it was conventional practice to position on the slide a pair of spaced apart limit switches which were tripped by a simple rod of cantilever design connected to the adjusting screw. Movement of the slide relative the adjusting screw caused the trip rod to trip one or the other of the limit switches.

A principle disadvantage with this arrangement was that the trip rod was subject to deflection or dislocation, making accuracy of adjustment of the slide uncertain. In addition, the switches of necessity were positioned within the slide, within the proximity of the adjusting screw, making them inaccessible for maintenance and adjustment.

The above disadvantages are overcome in accordance with the present invention by providing, in a press of the type which includes one or more adjusting screws by which the slide is raised or lowered relative the press bed, the improvement comprising a limit switch assembly including a rack bracket connected to one of the adjusting screws. The rack bracket comprises a rack end spaced from the screw and oriented parallel with movement of the slide. The latter supports a pinion which engages the rack end and which is rotated with movement of the slide relative the adjusting screw. Rotatable with the pinion is a cam which engages one of two limit switches.

Preferably the pinion is mounted on a shaft which penetrates a vertical side of the press slide, the cam and limit switches being positioned within a housing mounted on the outer surface of the press slide within full view and access of the operator for adjustment and maintenance.

It is also a preferred aspect of the present invention that the front of the limit switch housing is covered with a Plexiglass (trademark) window.

It is a further preferred aspect of the invention that the cam defines a curved cam surface, the circumference of said surface being proportional to the vertical adjustment of the slide.

Accordingly it is an object of the present invention to provide an improved limit switch arrangement for adjustment of a press slide.

It is a particular object of the present invention to provide a limit switch arrangement for press slide adjustment which is accessible and visible to the operator for maintenance and adjustment.

The invention and advantages thereof will become apparent upon consideration of the following specification, with reference to the accompanying drawings, in which:

FIG. 1 is a perspective view of a press on which there is mounted a limit switch device in accordance with concepts of the present invention;

FIG. 2 is a section view through line 2–2 of FIG. 1;

FIG. 3 is an elevation view taken along line 3–3 of FIG. 2;

FIG. 4 is a top plan view of the press slide taken along line 4–4 of FIG. 3; and

FIG. 5 is an elevation view taken along line 5–5 of FIG. 2.

Referring now to the drawings wherein the showings are for the purpose of illustrating the preferred embodiment of the invention only and not for the purpose for limiting the same, the FIGS. show a press A having opposite upright sides B which guide a press slide C in up and down movement towards and away from a press bed D. Above the slide C are rod connections E (only one of which is shown in FIG. 1) driven through linkage not shown by a motor F for the press on the top of the press. On the front side of the press slide C is a limit switch housing G containing limit switches for press slide adjustment.

FIG. 4 provides an illustration of the design of the press slide C of FIG. 1, although it is understood that the principles of the present invention are applicable to press slides of various shapes and designs. In essence, the press slide is rectangular in shape (with reference to the horizontal cross section view of FIG. 4) having opposite upright parallel sides 12 and 14, the side 12 constituting the front of the slide. These sides define an open-top cavity 16 into which the drive connections E (FIG. 1) extend. Gibs 18 at the corners of the press slide engage guideways in the sides B of the press which constrain the slide to vertical up and down movement.

Within the press slide cavity 16 is a platform 20, extending between the sidewalls of the slide. Referring to FIG. 2, the rod connection E extends downwardly in the direction of the platform 20, but has a lowermost end 22 spaced from the platform. Between the lowermost end 22 and the platform 20 is an adjusting screw 24 secured to the platform and slide in a manner to be described. At the upper end of the adjusting screw, there is provided a pair of knuckles 26 which are spaced apart from each other, and between which the lower end 22 of the rod connection fits. Both the rod connection and knuckles of the adjusting screw are provided with aligned openings 28 through which a wrist pin 30 extends pivotably joining the rod connection with the adjusting screw. Suitable bearing surfaces line openings 28 to receive the wrist pin.

Seated on the platform 20 of the press slide C is a housing assembly 32 which is generally circular in shape (as shown in FIG. 4) and is connected to the platform 20 by means of a plurality of corner bolts 34. The generally cylindrical sidewall 36 of the housing has at its lowermost end an inwardly directed annular flange 38 which seats on the upper surface of the platform 20, and an upper outwardly directed radial flange 40 on which is seated an annular washer-shaped housing adapter 42. The housing adapter has an inwardly extending lip 44, which extends inside of the inner wall of the housing cylindrical sidewall 36, the lip 44 and flange 38 defining therebetween and with the housing sidewall 36 a cavity 46. A cylindrical adjusting nut 48 having an internally threaded surface 50 is held axially in the cavity between the lip 44 and flange 38.

The adjusting nut 48 is rotatably seated in the cavity 46 and is rotated by means of a worm shaft 52 which engages, in a conventional manner, an annular knurled surface 54 extending around the outer circumference or side of the adjusting nut.

The adjusting screw 24 is necked down to a lesser diameter threaded end 56, below the upper end which is connected to the rod E, and the narrower diameter lower end is threadably secured into the adjusting nut 48. Completing the adjusting assembly is a connection sleeve 58, seated on top of the housing adapter 42 and encompassing the adjusting nut and rod connection in the area of connection of these two items.

Conventionally, the worm shaft 52 is rotated by means of a slide adjustment motor seated on the slide platform 20 remote from the adjusting screw. In operation, this motor is energized to rotate the worm shaft, which in turn rotates the adjusting nut 48. As the latter is rotated, the adjusting screw threaded end 56 is advanced downwardly into the nut, or out of the nut, causing the slide C to move upwardly or downwardly with the nut on the adjusting screw threaded end. During the adjustment operation the adjusting screw and rod E remain relatively stationary. In accordance with the present invention, the limit switch assembly for adjustment of the press slide includes a rack bracket 60 of inverted U-shaped configuration having

one end 62 connected to an upper shoulder 64 of the adjusting screw, on one of the knuckles 26, and an opposite end 65 which extends downwardly spaced from the connection sleeve 58 encompassing the adjusting screw. The orientation of the end 65 is substantially parallel with the direction of movement of the slide C during adjusting.

With reference to FIG. 5, the lower end 65 of the rack bracket is provided, along one side, with rack teeth 66. On the opposite side, the rack bracket end 65 is engaged by a rack guide 68. FIG. 2 also shows these components, and with reference to this FIG., the rack bracket end 65 is positioned adjacent to the vertical inner surface of front side 12 the slide, and the rack guide 68 is secured to the inside of side 12 by means of a plurality of bolts 70.

The vertical wall 12 of the press slide is indented slightly inwardly in the area of the rack guide, and has cast into the outer surface thereof outwardly extending walls 72 (FIGS. 4, 3) which define the rectangular housing G on the outside of the slide. This housing is shown in FIG. 1, in the upper right hand corner of the slide. Returning to FIG. 4, the surface 12 of the slide is penetrated by a shaft 76 which has on one end on the inner side of the slide a gear 78 engaging the rack teeth 66. On the opposite end, the end within housing G, the shaft supports a circular cam 80, better shown in FIG. 3. This cam in its periphery is provided with a notch 82. Along side the cam 80, upper and lower limit switches 84 and 86 are mounted, on platforms 88, these limit switches being of conventional design. The switches are provided with rollers 90 which engage the periphery of the cam 80, and the contacts within the limit switches are either in a closed or open position depending upon whether the rollers 90 therefor are seated within the notch 82, or outwardly positioned by the circumference of the cam.

In operation, the limit switches are electrically connected in the circuit for the slide adjustment motor. If the motor is energized to rotate the adjusting screw 48 (FIG. 2) so that the slide C is moved upwardly, this causes the surface 12 of the slide to also move upwardly relative to the rack end 65. This relative motion causes the cam 80 (FIG. 3) to rotate in a clockwise direction indicated by the arrow U until the notch 82 engages the roller of the lower limit switch 86. This closes the electrical circuit for the adjustment motor stopping the motor. If it is desired to lower the slide, the slide surface 12 moves downwardly (FIG. 2) relative the rack end 65, rotating the cam in the opposite direction until the notch 82 engages the roller of the upper limit switch 84, stopping the motor with the slide in the lowermost position of adjustment.

Advantages of the invention should now be apparent. A principle advantage is that by use of a U-shaped rack bracket, the movement of the slide relative to the adjusting screw can be accurately controlled by limit switches positioned remote from the adjusting screw. In addition, the relative linear movement of the slide is translated to rotational movement of the shaft 76, and the latter is oriented so that it penetrates the wall 12 of the slide. This in turn permits the mechanism which actuates the limit switches to be positioned on the outer surface of the slide, and translation of the rotational movement of the shaft back into actuation of the limit switches is very simply accomplished by use of the cam 80.

Preferably, the housing 74 for the limit switches is covered by a Plexiglass window 92 which is removable from the housing, making the limit switch assembly easily accessible for maintenance, and visible to the operator to see that it is functioning properly.

Although the invention has been described with respect to a specific embodiment, variations within the scope of the following claims will be apparent to those skilled in the art.

I claim:

1. In a press having a slide mounted for reciprocating movement, said slide having a front face, reciprocating drive means connected with said slide by connecting means, adjustment means interposed between said slide and said connecting means for selectively moving said slide toward and away from said connecting means, bracket means attached to said connecting means, said bracket means having an extension portion extending outwardly of said front face of said slide, limit switch means mounted on said front face of said slide for selectively opening and closing said limit switch means, and cooperating operator means between said extension portion of said bracket means and said switch actuating means for moving said switch actuating means upon movement of said slide relative to said connecting means when said adjustment means is operated.

2. The device of claim 1 wherein said extension portion of said bracket means has rack means thereon and said operator means comprises pinion gear means rotatably mounted on said front face of said slide, said pinion gear means being meshed with said rack means.

3. The device of claim 2 wherein said switch actuating means comprises cam means rotatably mounted on said front face of said slide on a common axis with said pinion gear means, said cam being rotatable with said pinion gear means.

4. The device of claim 1 wherein said limit switch means comprises first and second spaced apart limit switches, said cooperating operator means closing one of said switches and opening the other of said switches upon operation of said adjustment means to move said slide toward said connecting means, and said cooperating operator means closing the other of said switches and opening said one switch upon operation of said adjustment means to move said slide away from said connecting means.

5. The device of claim 1 wherein said extension portion of said bracket means extends downwardly substantially parallel to said front face of said slide, said extension portion having rack tooth means thereon, said cooperating operator means comprising pinion gear means meshing with said rack tooth means and rotatably mounted on said front face of said slide, a housing on said front face of said slide, said limit switch means being mounted in said housing, said switch actuating means comprising cam means rotatably mounted in said housing on a common axis with said pinion gear means, said housing having an open front portion closed by a transparent window.