No. 619,417. Patented Feb. 14, 1899.

D. E. HUNTER.

SHELVING.

(Application filed Sept. 23, 1897.)

(No Model.)

Fig. 1.

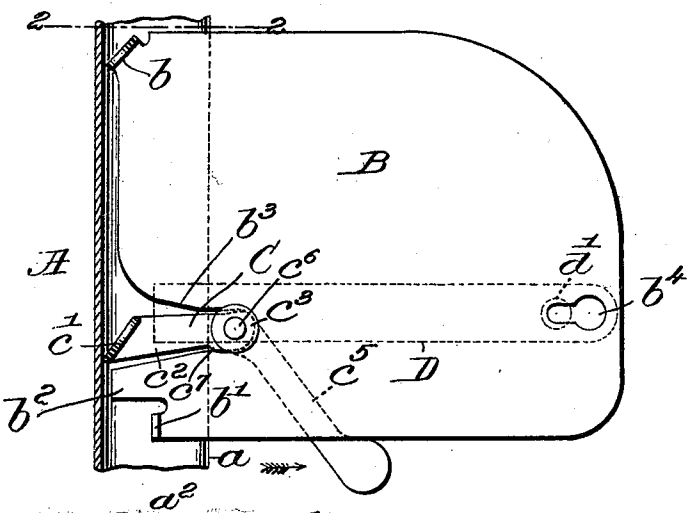

Fig. 2.

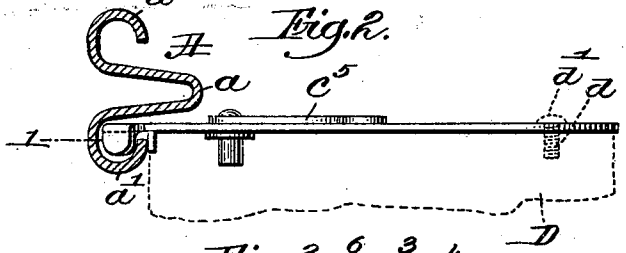

Fig. 3.

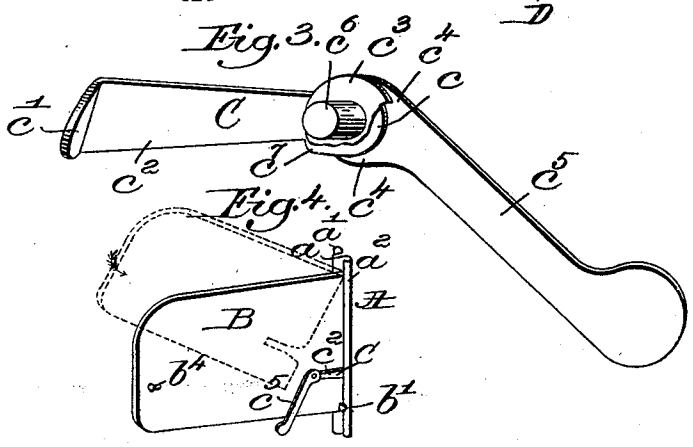

Fig. 4.

Witnesses:
Fred A. Gunlock.
Thomas J. Drummond.

Inventor:
David E. Hunter.
by Crosby & Gregory, Attys.

THE NORRIS PETERS CO., PHOTO-LITHO., WASHINGTON, D. C.

UNITED STATES PATENT OFFICE.

DAVID E. HUNTER, OF CAMBRIDGE, MASSACHUSETTS.

SHELVING.

SPECIFICATION forming part of Letters Patent No. 619,417, dated February 14, 1899.

Application filed September 23, 1897. Serial No. 652,679. (No model.)

To all whom it may concern:

Be it known that I, DAVID E. HUNTER, of Cambridge, county of Middlesex, and State of Massachusetts, have invented an Improvement in Shelving, of which the following description, in connection with the accompanying drawings, is a specification, like letters on the drawings representing like parts.

My invention is an improvement in shelving, having for its object the provision of an end bracket coöperating with a shelf and both constructed and arranged to maintain perfect rigidity when in supporting position and to permit instant adjustment up or down along a standard supporting it.

I provide an end bracket, preferably stamped out of sheet metal, with an engaging portion at its upper inner corner to hold against a standard and with a locking device freely movable with the bracket at all times and self-locking to hold the bracket in any adjustment, the shelf being supported at its rear edge on this locking device and at its front edge being preferably interlocked with the bracket. I also provide a brace and stop or lower supporting portion at the lower inner part of the bracket, which, coöperating with the upper engaging portion before mentioned, serve to maintain the bracket in proper position on the standard.

Various other advantages and details of construction will be pointed out in the course of the following description, and my invention will be defined in the accompanying claims, also forming a part of this specification.

In the drawings, showing a preferred embodiment of my invention, Figure 1 is a vertical section on the line 1, Fig. 2, showing the end bracket in side elevation and indicating a shelf thereon in dotted lines. Fig. 2 is a transverse horizontal section on the line 2 2, Fig. 1, showing the bracket in top plan or edge view. Fig. 3 is a detail in perspective, parts being broken away, showing the locking device used in connection with the end bracket. Fig. 4 is a perspective view illustrating the manner of connecting and disconnecting the bracket from the standard.

The standard A may be of any suitable construction, being herein shown as formed from sheet metal pinched together at its middle portion a in order to give a body and sufficient strength thereto and having its edges rolled over at a' a^2 to receive brackets for two rows of shelving, it being understood that a similar standard will be placed at the opposite end of each tier of shelves to receive brackets similarly as herein shown.

The bracket B may be of any suitable material, being herein shown as stamped from sheet metal. At the upper part of its inner or rear edge I provide an engaging portion or ear b, preferably extending obliquely to the bracket and being herein shown as shaped to conform to the interior of the rolled-over edge or retaining-flange a' of the standard A. (See Fig. 2.) This ear b is intended to be passed behind the flange a', so as to engage the forward edge of the latter and hold the bracket against the tendency thereof to pitch forward away from the standard by reason of the weight of the books or other articles resting on the shelf. At its lower inner part the bracket is provided with a stop or supporting portion b', turned outwardly from the plane of the bracket in the same direction as the engaging portion b and adapted to rest against the outer side of the flange a', opposite the engaging portion b, as is clearly evident viewing Figs. 1, 2, and 4. Preferably also the bracket is provided with a brace b^2, extending inwardly between the body a and the flange a' of the standard, this brace serving to prevent the bracket from being deflected sidewise in either direction and acting also as a guide to aid in the free movement of the bracket as it is adjusted up or down along the standard.

The bracket B is notched or cut away at b^3 to provide an opening for a locking device C. (Shown in enlarged perspective in Fig. 3.) This locking device is freely pivoted or rests loosely, so as to turn freely in the inner end of the notch b^3, and comprises a hub c to rest in the notch b^3 in the plane of the bracket B and a locking-lug c', somewhat similar in shape to the engaging portion b, before mentioned, said locking-lug being carried at the rear end of an arm c^2, projecting from the hub c, so as to bring the lug c' within the roll or flange a' of the standard, in order to wedge therein and firmly lock the bracket and shelf in adjusted postion, as will be evident viewing Fig. 1. The hub c has a flange in the

form of a disk or washer c^3 at one side and the flange c^4 of a counterpoise and operating arm c^5 at the other side thereof, in order to embrace the opposite sides of the bracket B and maintain the locking device properly seated in the notch thereof. The operating mechanism or handle c^5 preferably extends downwardly beneath the bracket B, in order to be conveniently engaged by the hand and pulled outwardly in the direction of the arrow, Fig. 1, to disengage the lug c' from locking position with the standard and permit the bracket to be moved up and down thereon. A supporting-stud c^6 projects from the locking device, as shown, in order to support a shelf D, as indicated in dotted lines in the figures, the shelf for this purpose being recessed at its under side to receive said stud and the washer c^3. The weight of the shelf is therefore brought by means of this construction on the locking device at the stud c^6, and in order to insure that the locking device shall be automatically held in locking position engaging the flange a' of the standard during the adjustment of the bracket I have provided an eccentrically-located supporting-surface or lower bearing-point c^7 to bear on the lower edge of the notch b^3, as is shown in Fig. 1, so that as the weight of the shelf and its contents at such time bear down on the stud c^6 at one side of the fulcrum-point c^7 it lifts the opposite or clamping end of said arm c^2, causing the lug c' to be in position to bite or wedge against the standard when the parts are released and allowed to assume their normal or locked position. This action in the construction herein shown is due to the fact that a considerable part of the weight of the contents of the shelf is borne not by the bracket, but by the stud c^6, and therefore this downward weight on the arm c^2 acts at one end thereof, the wedging or clamping taking place at the other end c' thereof, while the fulcrum c^7 is intermediate these ends; or, in other words, broadly stated, this feature of invention consists in having a clamping device, preferably carried in a notch, perforation, or other opening in the bracket, provided with a fulcrum in such a position that when the weight of the loaded shelf is thrown upon said clamping device during the adjustment of the bracket the said weight automatically throws the device into clamping position. The handle c^5 also tends to maintain the locking device in the last-mentioned position, so that even though the shelf should be light and should not be loaded the bracket and shelf would still be maintained locked.

At its front edge the shelf is provided with a pin d, whose head d', Fig. 2, is adapted to pass through the larger end of a slot b^4, (see Fig. 1,) the shelf being then slid backwardly so as to bring the pin into the position indicated in Fig. 1, thereby locking the shelf at its front edge to the bracket, the rear edge of the shelf being at the same time dropped over the stud c^6, so as to be held and supported thereby. It will thus be seen that it is impossible for the shelf to become accidentally disengaged from its supporting position and also that the shelf and bracket are held snugly and firmly together.

The operation of the construction above described will be understood viewing Fig. 4. Supposing the shelf and bracket to be already secured in the position as shown in Fig. 1 and that it is desired to remove them from the standard, the shelf is first lifted at its rear edge in order to disengage its notch from the stud c^6, being then pulled forward until the head d' of the pin d thereon is alined with the large end of the slot b^4, whereupon the bracket is sprung away from the shelf sufficiently to remove the slot from the pin, and the shelf is thereupon removed. Having done this, the bracket B is simply raised into the dotted-line position, Fig. 4, thereby removing it from the locking device, the latter remaining in engagement with the standard, and then the bracket is readily removed from the standard simply by swinging it around in the direction of the arrow, Fig. 4, or downwardly, Fig. 2, so as to turn the engaging portion b from behind the flange a'. The locking device is similarly removed from the standard. When it is desired to replace the parts, the locking device is first engaged with the standard simply by turning it upwardly and obliquely thereto, so as to hook the lug c' behind the flange a', being then lowered into the position shown in Fig. 4, where the lug c' will maintain said device without assistance, and then the bracket B similarly has its engaging portion b entered behind the flange a', and the bracket is then turned down from the dotted-line position, Fig. 4, to the full-line position, so as to bring the notch b^3 between the flanges or portions c^3 c^4 of the locking device, so as to engage the hub c thereof. Then the shelf is attached to the bracket by the insertion of its pin d into the slot b^4 and the engagement of its rear portion with the stud c^6, as before described.

The shelf may be adjusted up or down instantly and will automatically lock itself wherever adjusted.

It will be evident from the above description that my improved bracket may be secured in place at any portion of the standard and that if a number of shelves are already on the standards and it is desired to put another shelf thereon it can be placed wherever required, inasmuch as no special place or formation of the standard is required in order to attach any of the parts, as has heretofore been necessary in devices most like the present.

Having fully described my invention and the mode of using the same, and without limiting myself in regard to details otherwise than hereinafter defined in the claims, what I claim as new, and desire to secure by Letters Patent, is—

1. As an article of manufacture, a bracket for shelving, consisting of a vertical body,

having at its upper rear edge an engaging portion and at its lower rear edge a supporting portion, each projecting laterally therefrom, said two projecting portions being out of vertical alinement with each other, the former to engage behind a sustaining part of a standard and the latter to engage in front thereof, and a locking device near the bottom of said bracket remote from the upper engaging portion coöperating with said projecting portions, to lock the bracket on a standard, said upper portion being held in engagement with the standard by the weight of the parts and the shelf, independent of the locking device, substantially as described.

2. As an article of manufacture, a bracket for shelving, consisting of a vertical body, having at its upper rear edge an engaging portion and at its lower rear edge a supporting portion, each projecting laterally therefrom, said two projecting portions being out of vertical alinement with each other, the former to engage behind a sustaining part of a standard and the latter to engage in front thereof, and a locking device coöperating with said projecting portions, to lock the bracket on a standard, said locking device consisting of an arm pivoted on said body and having at its rear end a lug projecting therefrom laterally in the same direction as the said projections and in substantially vertical alinement with the upper engaging portion, and arranged to wedge within a standard and thereby offer vertical support for the bracket, substantially as described.

3. As an article of manufacture, a bracket for shelving, consisting of a vertical body having an engaging portion at its upper rear edge for adjustably retaining it on a standard, said bracket having an opening extending adjacent its rear edge below said engaging portion, a locking device loosely mounted in said opening and provided with means at its rear end for locking it and the bracket in adjusted position on the standard, said locking device having a stud projecting therefrom laterally beyond said body to support a shelf adjacent its rear edge, and said body having at its front part means to support the front edge of the shelf, substantially as described.

4. As an article of manufacture, a bracket for shelving, consisting of a vertical body having an engaging portion at its upper rear edge for adjustably retaining it on a standard, said bracket having an opening extending adjacent its rear edge below said engaging portion, a locking device loosely mounted in said opening and provided with means at its rear end for locking it and the bracket in adjusted position on the standard and means to maintain it normally in said locking position, said locking device having a stud projecting therefrom laterally beyond said body to support a shelf adjacent its rear edge, and said body having at its front part means to support the front edge of the shelf, substantially as described.

5. As an article of manufacture, a bracket for shelving, consisting of a vertical body having an engaging portion at its upper rear edge for adjustably retaining it on a standard, said bracket having an opening extending adjacent its rear edge below said engaging portion, a locking device loosely mounted in said opening and provided with means at its rear end for locking it and the bracket in adjusted position on the standard, said locking device having a stud projecting therefrom laterally beyond said body to support a shelf adjacent its rear edge, and said body having at its front part means to support the front edge of the shelf, said locking device having its lower bearing-point on said body located between said stud and its said locking rear end, substantially as described.

6. The combination with a standard having a roll or flange as a', of a bracket for shelving, said bracket having an opening adjacent its rear end intermediate its top and bottom edges, and an engaging portion at its upper rear corner projecting laterally therefrom, said opening having loosely mounted therein a locking device comprising a hub to rest in the opening, flanges at each side thereof to maintain the hub in proper position, an arm extending rearwardly from said hub and provided with a lug projecting laterally therefrom, said lug being arranged obliquely to said standard to slide in said roll when the arm is lowered, and to bite or wedge against the sides of said roll when the arm is raised, means normally maintaining said arm in raised position, and means on said bracket cooperating with a shelf to support the latter, substantially as described.

7. The combination with a standard having a roll or flange as a', of a bracket for shelving, said bracket having an opening adjacent its rear end intermediate its top and bottom edges, and an engaging portion at its upper rear corner projecting laterally therefrom, said opening having loosely mounted therein a locking device comprising a hub to rest in the opening, flanges at each side thereof to maintain the hub in proper position, an arm extending rearwardly from said hub and provided with a lug projecting laterally therefrom, said lug being arranged obliquely to said standard to slide in said roll when the arm is lowered, and to bite or wedge against the sides of said roll when the arm is raised, means normally maintaining said arm in raised position, and a guide projecting from the lower part of the bracket within said roll, to prevent lateral movement of the bracket relatively to the standard, and means on said bracket coöperating with a shelf to support the latter, substantially as described.

8. The combination with a standard having a roll or flange as a', of a bracket for shelving, said bracket having an opening adjacent its

rear end intermediate its top and bottom edges, and an engaging portion at its upper rear corner projecting laterally therefrom, said opening having loosely mounted therein a locking device comprising a hub to rest in the opening, means preventing movement of said hub sidewise out of supporting engagement with said opening, an arm extending rearwardly from said hub and provided with a laterally-projecting lug, said lug being arranged obliquely to said standard to slide in said roll when the arm is lowered and to bite or wedge against the sides of said roll when the arm is raised, and an operating-handle extending from said hub, adapted to be engaged by the hand to unlock said locking device for the adjustment of the shelf, said bracket being provided with means coöperating with a shelf to support the latter, substantially as described.

9. The combination with a standard having a roll or flange as a', of a bracket for shelving, said bracket having an opening adjacent its rear end intermediate its top and bottom edges, and an engaging portion at its upper rear corner projecting laterally therefrom, said opening having loosely mounted therein a locking device comprising a hub to rest in the opening, means preventing movement of said hub sidewise out of supporting engagement with said opening, an arm extending rearwardly from said hub and provided with a laterally-projecting lug, said lug being arranged obliquely to said standard to slide in said roll when the arm is lowered, and to bite or wedge against the sides of said roll when the arm is raised, means to maintain said arm normally in raised position, said bracket having at its lower rear part a projecting stop engaging the front of said roll, and being provided with means coöperating with a shelf to support the latter, substantially as described.

10. As an article of manufacture, a bracket for shelving consisting of a vertical body having an engaging portion at its upper rear edge for adjustably retaining it on a standard, said bracket having an opening extending adjacent its rear edge below said engaging portion, a locking device for locking the bracket in adjusted position, said locking device being loosely mounted in said opening and having a stud projecting therefrom laterally beyond said body to support a shelf adjacent the rear edge, and said body having at its front part means to support the front edge of the shelf, substantially as described.

11. The combination with a standard, of a bracket and shelf, said bracket supporting the front edge of the shelf, and a separate clamping device, said clamping device having means receiving directly, and independently of the bracket, the weight of the shelf for automatically clamping or locking the bracket in adjusted position, substantially as described.

In testimony whereof I have signed my name to this specification in the presence of two subscribing witnesses.

DAVID E. HUNTER.

Witnesses:
JOHN COUPER EDWARDS,
ALEX. COUPER PROUDFIT.