Office de la Propriété Intellectuelle du Canada
Un organisme d'Industrie Canada

Canadian Intellectual Property Office
An agency of Industry Canada

CA 2582266 C 2013/06/11

(11)(21) **2 582 266**

(12) **BREVET CANADIEN**
CANADIAN PATENT

(13) **C**

(86) Date de dépôt PCT/PCT Filing Date: 2005/10/18
(87) Date publication PCT/PCT Publication Date: 2006/04/27
(45) Date de délivrance/Issue Date: 2013/06/11
(85) Entrée phase nationale/National Entry: 2007/03/28
(86) N° demande PCT/PCT Application No.: DE 2005/001885
(87) N° publication PCT/PCT Publication No.: 2006/042533
(30) Priorité/Priority: 2004/10/18 (DE PCT/DE2004/002332)

(51) Cl.Int./Int.Cl. *A61F 2/44* (2006.01), *A61F 2/46* (2006.01)

(72) Inventeurs/Inventors:
BUETTNER-JANZ, KARIN, DE;
BUETTNER, EIKO, DE

(73) Propriétaire/Owner:
BUETTNER-JANZ, KARIN, DE

(74) Agent: DEETH WILLIAMS WALL LLP

(54) Titre : ENDOPROTHESE DE DISQUE INTERVERTEBRAL A BORD ADAPTE AU MOUVEMENT POUR PARTIE LOMBAIRE ET PARTIE CERVICALE DE LA COLONNE VERTEBRALE

(54) Title: INTERVERTEBRAL DISC ENDOPROSTHESIS WITH A MOTION-ADAPTED EDGE FOR THE LUMBAR VERTEBRAL COLUMN AND CERVICAL VERTEBRAL COLUMN

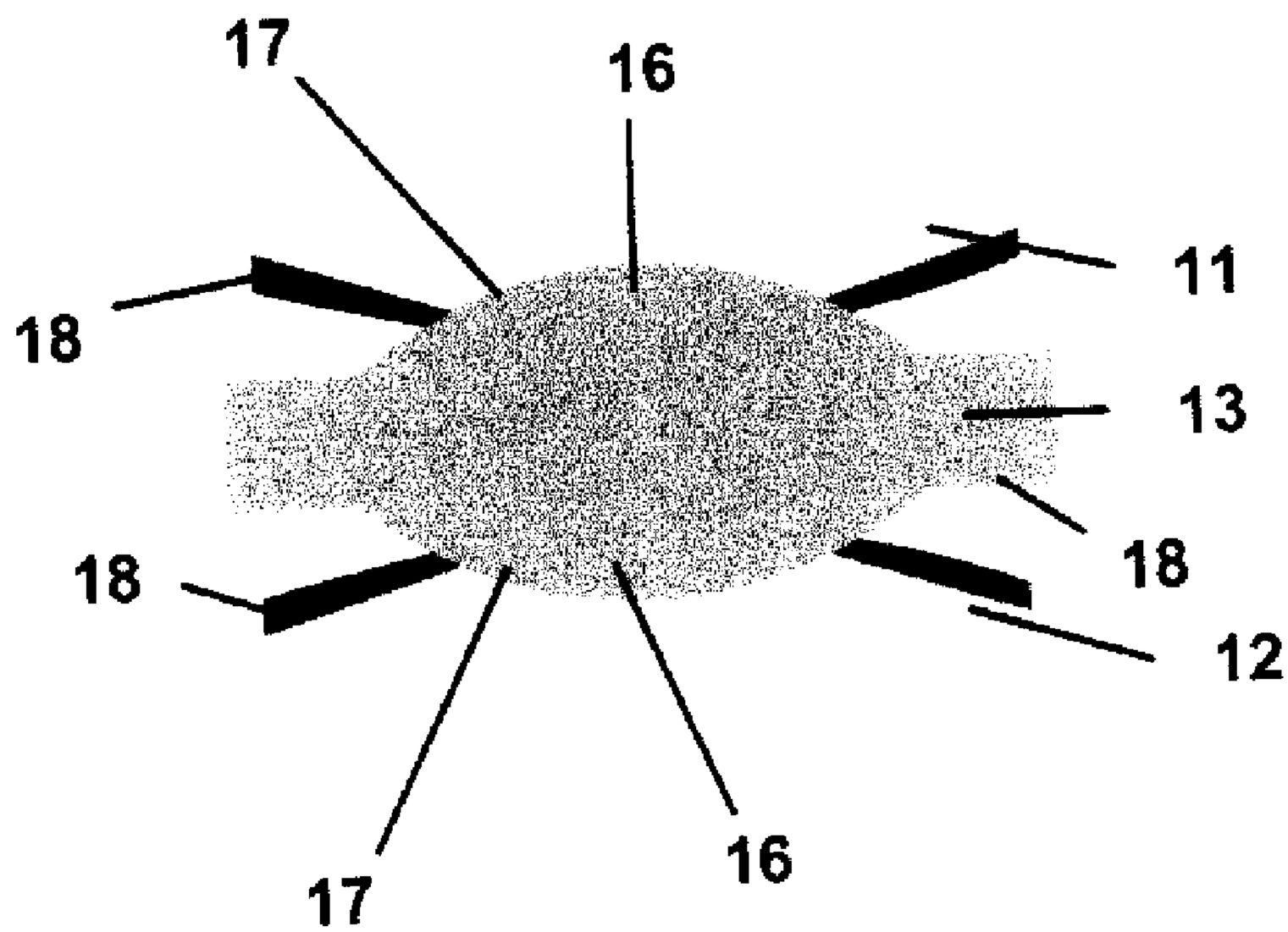

(57) Abrégé/Abstract:
The invention relates to an intervertebral disc prosthesis for the total replacement of the intervertebral disc within the lumbar and cervical spine. For a two part as well as for a three part intervertebral disc prosthesis, according to the invention, in accordance to

(57) Abrégé(suite)/Abstract(continued):
the design of the edges of the sliding partners, there are aspects for at least one of the sliding partners, in which there is an wavelike design of the edge, as the respectively differently high edge regions preferably fluently merge. A significant advantage of the two intervertebral disc prostheses, according to the invention, compared to the present state of the art of already known prostheses, is that as a result of a central transfer of load across a large surface area due to the spherical sliding surfaces, the maximally possible inclination of the sliding partners towards each other in a dorsoventral and laterolateral direction and/or the extent of rotation can, according to the invention, be defined through the wavelike design of the edge region.

Abstract

The invention relates to an intervertebral disc prosthesis for the total replacement of the intervertebral disc within the lumbar and cervical spine. For a two part as well as for a three part intervertebral disc prosthesis, according to the invention, in accordance to the design of the edges of the sliding partners, there are aspects for at least one of the sliding partners, in which there is an wavelike design of the edge, as the respectively differently high edge regions preferably fluently merge. A significant advantage of the two intervertebral disc prostheses, according to the invention, compared to the present state of the art of already known prostheses, is that as a result of a central transfer of load across a large surface area due to the spherical sliding surfaces, the maximally possible inclination of the sliding partners towards each other in a dorsoventral and laterolateral direction and/or the extent of rotation can, according to the invention, be defined through the wavelike design of the edge region.

Intervertebral disc endoprosthesis with a motion-adapted edge for the lumbar vertebral column and cervical vertebral column

Description

The invention relates to an intervertebral disc prosthesis for the total replacement of an intervertebral disc of the lumbar and cervical spine.

The idea of function-retaining artificial replacements for intervertebral discs is younger than that for replacements of artificial joints of extremities, but in the meantime about 50 years old [Büttner-Janz, Hochschuler, McAfee (Eds.): The Artificial Disc. Springer Verlag, Berlin, Heidelberg, New York 2003]. It results from biomechanical considerations, unsatisfactory results of fusion surgeries, disorders adjacent to fusion segments and from the development of new materials with greater longevity.

By means of function-retaining disc implants it is possible to avoid fusion surgery, i.e. to maintain, or to restore the mobility within the intervertebral disc space. In an in-vitro experiment it is also possible to achieve a normalization of the biomechanical properties of the motion segment to a large extent through the implantation of an artificial intervertebral disc after a nucleotomy.

Implants for the replacement of the whole intervertebral disc differ from those for the replacement of the nucleus pulposus. Accordingly, implants for the total replacement of the intervertebral disc are voluminous; they are implanted via a ventral approach. An implantation of a prosthesis for total replacement of the intervertebral disc immediately after a standard nucleotomy can therefore not be carried out.

The indication for a function-retaining intervertebral disc replacement as an alternative to the surgical fusion includes, besides the painful discopathy, also pre-operated patients with a so-called post discectomy syndrome, patients with a recurrent herniated intervertebral disc within the same segment and patients having a pathology within the neighbouring intervertebral disc as a consequence fusion surgery.

Presently, a total of more than 10 different prostheses are clinically used for the total replacement of intervertebral discs. For the lumbar spine the Charité Artificial Disc, the Prodisc, the Maverick, the FlexiCore and the Mobidisc (Overview in Clinica Reports, PJB Publications Ltd., June 2004) are particularly well known, and for the cervical spine the Bryan prosthesis, the Prestige LP prosthesis, the Prodisc-C and the PCM prosthesis, which will be described below.

The Prodisc prosthesis for the lumbar spine is being implanted since 1999, following its further development to the Prodisc II. Although with respect to its components a three-part intervertebral disc prosthesis, it is functionally a two-part prosthesis with its sliding partners made of metal and polyethylene. Implantations of the Prodisc are carried out in the lumbar spine and with an adapted model of the prosthesis, the Prodisc-C, also in the cervical spine. Different sizes, heights (achieved by the polyethylene core) and angles of lordosis (achieved by the metal endplates) are available. Bending forward and backward as well as to the right and left is possible to the same extent of motion; the axial rotation is not limited in the construction.

The same applies to both two-part prostheses for the cervical spine, the PCM prosthesis with its sliding partners metal and polyethylene and the Prestige LP prosthesis with its sliding partners metal-metal. As special feature of the construction of the Prestige LP prosthesis it has the possibility for an anterior-posterior translation, due to the horizontal ventrally prolonged concavity, which, in a frontal section, has the same radius as the convexity.

The Maverick and the FlexiCore for the lumbar spine are functionally two-part prostheses with spherical convex-concave sliding partners, both with sliding partners made of metal-metal. In contrast, the Mobidisc is functionally a three-part prosthesis with sliding partners of metal-polyethylene and two articulation surfaces. One area is a segment of a sphere, as it is in the three afore mentioned prostheses, with a convex and a concave surface of the articulating partners each of the same radius, the other area of the Mobidisc being plane. Although a limitation of the axial rotation is planned within the plane section, it is not limited within the convex-concave area of articulation. In contrast the FlexiCore has a small stopping area within the spherical sliding surfaces limiting the rotation movement.

The Bryan prosthesis is clinically used as a compact prosthesis for total replacement of intervertebral discs of the cervical spine. It is attached to the vertebral bodies by convex titanium plates with a porous surface and achieves its biomechanical properties by virtue of a polyurethane nucleus.

The longest experience exists with the Charité prosthesis, which is matter of the DE 35 29 761 C2 and the US 5,401,269. This prosthesis was developed in 1982 by Dr. Schellnack und Dr. Büttner-Janz at the Charité in Berlin and was later on named SB Charité prosthesis. In 1984 the first surgery took place. The intervertebral disc prosthesis was further developed and since 1987 the current type of this prosthesis, model III, is being implanted; in the meantime over 10000 times worldwide (DE 35 29 761 C2, US 5,401,269). The prosthesis is functionally three-parted with the sliding partners metal and

polyethylene with two identical spherical sliding surfaces. On the one hand it has a transversally mobile polyethylene core and on the other hand the accordingly adapted concave cups within the two metal endplates. For the adaptation to the intervertebral space, the Charité prosthesis provides different sizes of the metal plates and different heights of the size adapted sliding cores as well as angled prosthetic endplates, which when implanted vice versa in sagittal direction can also be used as replacement for the vertebral body. The primary fixation of the Charité prosthesis is achieved by six teeth, which are located in groups of three slightly towards the middle next to the frontal and rear edge of each prosthetic plate.

The other prostheses have other primary fixations on their towards the intervertebral bodies directed surfaces, e.g. a sagittally running keel, a structured surface, a convex shape with for instance crosswise running grooves and combinations thereof, also with differently located teeth. Furthermore screw fixations can be used, either from ventral or from within the intervertebral space into the intervertebral body.

To assure a long-term fixation of the prosthetic endplates to the intervertebral bodies and to thus generate a firm connection with the bone, a surface was created in analogy to cement-free hip and knee prostheses, which combines chrome-cobalt, titanium and calcium phosphate in such a way that it is possible for bone to grow directly onto the endplates. This direct connection between prosthesis and bone, without the development of connective tissue, makes a long-term fixation of the artificial intervertebral disc possible and reduces the danger of loosening or displacements of the prosthesis and material breakage.

One primary objective of function retaining intervertebral disc replacements is to closely adapt the motions of the prosthesis to the ones of a healthy intervertebral disc. Directly connected to this is the motion and stress for the facet joints, which following inappropriate biomechanical stress have their own potential for disorders. There can be abrasion of the facet joints (arthritis, spondylarthritis), in the full blown picture, with the formation of osteophytes. As result of these osteophytes and also by a pathologic course of motion of the intervertebral disc alone, the irritation of neural structures is possible.

A healthy intervertebral disc is, in its interactions with other elements of the motion segment, composed in such a way that it allows only motions to a certain extent. For example, within the intervertebral disc, motions to the front and back are combined with rotary motions, and side motions are also combined with other motions. The motion amplitudes of a healthy intervertebral disc are very different, with respect to the extension (reclination) and flexion (bending forward) as well as to the lateral bending (right and left)

and rotary motion. Although of common basic characteristics, there are differences between the motion amplitudes of the lumbar and cervical spine.

During motion of the intervertebral disc the centre of rotation changes, i.e. the motion of the intervertebral disc does not take place around a fixed center. Due to a simultaneous translation movement of the adjacent vertebrae, the center changes its position constantly (inconstant center of rotation). The prosthesis according to DE 35 29 761 C2 shows a construction which differs in comparison to other available types of prostheses which are build like a ball and socket joint, as a result of which they move around a defined localized centre of rotation. By virtue of the three-part assembly of the prosthesis according to DE 35 29 761 C2, with two metallic endplates and the interpositioned freely mobile polyethylene sliding core, the course of motion of a healthy intervertebral disc of the human spine is mimicked as far as possible, however without the exact motion amplitudes in the specific motion directions.

A further important feature of the healthy lumbar intervertebral disc is its trapezium shape, which is primarily responsible for the lordosis of the lumbar and cervical spine. The vertebral bodies themselves contribute only to a minor extent to the lordosis. During prosthetic replacement of intervertebral discs the lordosis should be maintained or reconstructed. The Charité disc prosthesis provides four differently angled endplates, which moreover can be combined with each other. However during surgery there is more surgical effort and the risk to damage the vertebral endplates with the resulting danger of subsidence of the prosthesis into the vertebral bodies, if the prosthesis has to be removed completely, because a good adjustment of lordosis and an optimal load of the center of the polyethylene core were not achieved.

To avoid sliding or a slip-out of the middle sliding partner from the endplates, the DE 35 29 761 C2 discloses a sliding core with a two-sided partly spherical surface (lenticular), with a plane leading edge and at the exterior with a ring bulge, which will lock between the form-adapted endplates during extreme motion. The DE 102 42 329 A1 discloses a similar intervertebral disc prosthesis which has a groove around the contact surfaces, in which an elastic ring is embedded that is in contact with the opposite contact area for a better course.

The EP 0 560 141 B1 describes a three-part intervertebral disc prosthesis, which also consists of two endplates and an interpositioned prosthetic core. The intervertebral disc prosthesis, described in this document, provides a resistance during rotation of its endplates in opposing directions around a vertical rotary axis without a contact between the prosthetic endplates. This is achieved by a soft limitation of the endplates during

rotation onto the prosthesis core caused by the weight, which acts on the plates as a result of the biomechanical load transfer within the spine, because the corresponding radii of curvature differ in a median- sagittal and frontal transection.

The above mentioned models are permanently anchored in the intervertebral spaces as implants. Especially due to a load transfer over too small surface areas, a migration of the endplates into the vertebral bodies and thus a dislocation of the complete implant is possible in middle to long-term, resulting in artificial stress for the vertebral bodies and the adjacent nerves and in the end for the total motion segment, and leading to new complaints of the patients. The long-term stability of the polyethylene and the restricted mobility of the intervertebral disc prosthesis due to an inappropriate load on the polyethylene within the intervertebral space have to be discussed. Insufficiently adapted ranges of motion and adverse biomechanical stress in the motion segment can possibly lead to persistence of the complaints or later on to new complaints of the patients.

The US 6,706,068 B2 on the other hand, describes an intervertebral disc prosthesis comprising an upper and lower part, in which the parts are built correspondently towards each other. No intermediate part as middle sliding partner exists. Different designs are realized for the interdigitating and articulating partners, resulting in a two-part prosthesis. The design is however limited to structures having either edges or corners so that this way both parts of the prosthesis articulate with each other; in this case it is not possible to speak of sliding partners. Furthermore two sliding partners are described having one convex part towards the interior of the prosthesis and the other sliding partner is correspondingly shaped concavely. This kind of prosthesis, however, allows restricted movements of the artificial intervertebral disc only. The concave protuberance corresponds to a part of a ball with the according radius. The US 6,706,068 B2 further shows a two-part disc prosthesis having convex and concave partial areas on each sliding partner corresponding to concave and convex partial areas of the other sliding partner. According to the disclosure of the US 6,706,068 B2 several fixed points of rotation are generated.

The US 5,258,031 discloses a two-part disc prosthesis, in which the two endplates articulate with each other by a ball and socket joint. The joint is located centrally in the frontal section. In a lateral view, the small area of articulation is positioned outside the middle. The articulation areas are spherical in a sagittal view and plane in a frontal view, at the ends small and partly spherical parts are followed by plane skewed ones; these parts have no contact when the other parts of the joint are in contact. Bending to one side with a prosthesis according to the US 5,258,031 is achieved by use of the partly spherical edge of the articulation areas. Whether the lateral inner parts of the endplates come into

contact with each other cannot be clearly discerned from the US 5,258,031. At least during one lateral motion, the laterally outwardly opened areas in the bilateral part of the articulation areas do not come into contact. Therefore during lateral bending of the endplates according to the US 5,258,031 the pressure is partly on the spherical edges of the articulation areas only. Because of the pressure distribution only onto points or small areas during side bending, the outer parts of the convex/concave parts are exposed to greater abrasion. The edges of the prosthesis also do not have contact over a large area during the different movements. If the prosthesis according to the US 5,258,031 provides rotation around a vertical axis there is only a bilateral punctiform contact area between the upper and lower endplates.

Setting off from this state of the art it is the objective of this invention to provide an intervertebral disc prosthesis for the total replacement of intervertebral discs, with which the extent of the movement can be specifically adapted to the anatomy and biomechanics of the lumbar and cervical spine. This is achieved by the design of the edges of the prosthesis by being such that a physiological motion and at the same time as large as possible a contact region of the sliding partners is provided.

The objective is solved by the features of the independent claims 1 and 2. The invention comprises two different types of an intervertebral disc prosthesis, namely a functionally two-part and a functionally three-part prosthesis.

A functional two-part prosthesis, as per invention, according to claim 1 is characterized by

a) a first sliding partner constructed in such a manner, that the opposite side of the side for the assembly with a vertebral body has a convex curvation (convexity) , and the geometry of this convexity is like a cap of a sphere, with the convexity being completely surrounded by an edge, and

b) a second sliding partner, with a concave articulation area (concavity) on the side opposite of that assembled to the vertebral body, and the geometry of the concavity being defined by a recess corresponding with the spherical convexity of the first sliding partner with the recess being completely surrounded by an edge, and

c) at least one sliding partner having an edge for the targeted limitation of the maximal possible motion of the sliding partners , which as result of its varying height surrounds convexity or concavity in a wavelike manner, and

d) the other sliding partner having an edge surrounding the corresponding concavity or convexity, which surrounds the corresponding concavity or

convexity corresponding to the articulating sliding partner in a wavelike or plane manner,

e) the differences of the heights of a wavelike edge transit seamlessly and/or in one or several steps, and

f) during terminal inclination and/or rotation of the sliding partners towards each other a definite limitation of the maximal possible motion arising as a result of a gap-closure of the edges.

The functional three-part prosthesis, as per invention, according to claim 2 is characterized by

a) the middle sliding partner has on its upper and lower side a convex curvation (convexities), and a geometry of these convexities each corresponds to a cap of a sphere, and

b) the upper and lower sliding partner are constructed with a concave inner articulation area (concavity), and a geometry of these concavities being defined by a corresponding recess to the convexity of the upper and lower side of the middle sliding partner, each being totally surrounded by an edge, and

c) at least one of the sliding partners having an edge suitable for a targeted limitation of the maximal possible motion of the sliding partners, which as a result of its varying heights surrounds the convexity or concavity in a wavelike manner, and

d) another sliding partner has an edge surrounding the corresponding concavity or convexity, which surrounds the corresponding concavity or convexity corresponding to the articulating sliding partner in a wavelike or plane manner,

e) differences of the heights of a wavelike edge transits seamlessly and/or in one or several steps, and

f) during terminal inclination and/or rotation of the sliding partners towards each other a defined limitation of the maximal possible motion arising as a result of a gap-closure of the edges.

Both prostheses have in common that they comprise of articulation sliding partners of which each upper sliding partner is firmly assembled to an upper vertebral body and each lower sliding partner is firmly assembled to a lower vertebral body and that the sliding partners form interdigitating articulations areas on their toward each other directed inner

surfaces. Upper and lower sliding partner of a three-part prosthesis as well as both sliding partners of a two-part prosthesis at the same time act as endplates, having means for assembly to an upper or lower vertebral body.

The two-part prosthesis can be of advantage for the lumbar spine in prosthetic implantations in multiple adjacent intervertebral spaces because of its model-immanent stability. The three-part intervertebral disc prosthesis has the advantage that the transversal sliding of two neighboring vertebrae is minimal, resulting in a particularly advantageous adaptation to the bio-mechanics of the motion segment particularly for the lumbar spine. Furthermore, the three-part prosthesis enables the simulation of an inconstant center of rotation.

With respect to the presented invention the three body axes are described by the following terms: A “sagittal section” or a view in the “sagittal plane” enables a lateral view, because the section plane runs vertically from the front to the back. The term “front” is synonymous with “ventral” and the term “back” with “dorsal”, because using these terms, the orientation of the prosthesis within the body is indicated. A “frontal section“or the “frontal plane“ is a vertical cross-section from one side to the other. The term “lateral” stands for sidewise. Sagittal and frontal sections are vertical sections as they both run in a vertical plane, but 90 degrees displaced from one another. A view in the “transversal plane” or a “transversal section” shows a top-view onto the prosthesis, as it is a horizontal section.

With respect to the description and depiction of the presented invention an articulation area signifies that region of the sliding partners, which comprises the curved convex and concave parts of the surfaces, which come into contact or slide on each other or articulate with each other. For this reason articulation area is synonymous with the term sliding area.

The term “corresponding”, with respect to the articulating sliding surfaces designates not only congruent convex and concave shaped surfaces articulating with each other. Moreover this term also designates articulating surfaces that are not completely congruent. Such “deviations” or tolerances regarding the sliding surfaces of articulating sliding partners can be caused on the one hand by the chosen materials and shapes. On the other hand it may also be intended that convexity and the concavity articulating with it are not totally congruent, for instance in order to designate the respectively wished for possibilities of motion of the articulating partners directly.

With respect to the presented invention, an edge indicates an area located between outer rim of the particular sliding partner and its convexity(ies) or concavity(ies).

In the case of a two- and three-part intervertebral disc prosthesis, as per invention, the concavities of upper and lower sliding partners are each enclosed by an edge, whereas the convexities of the middle sliding partner of a three part prosthesis span across the complete upper and lower side, i.e. the convexities are without edge or the convexities are each surrounded by an edge. The edges are either in their entire breadth of the same or differing heights or wavelike, with the differences in height of a wavelike edge changing fluently and/or in one or more steps. If in the case of a three-part prosthesis the middle sliding partner has a wavelike edge, the edges of upper and lower sliding partners may be designed without wavelike pattern, because the wavelike shape of the edge of the middle sliding partner is sufficient to define the maximal motion amplitudes of the sliding partners in ventral, dorsal and both lateral directions.

It is important for the design of the surfaces of the edges, that during terminal inclination of the sliding partners towards each other a maximally possible contact between the edges of the sliding partners is guaranteed. Should the edges not have a plane surface, they have to in any case be designed in such a way that when they close towards each other, a maximally possible contact arises between them. In these cases an edge may have a wavelike shape, which surrounds a convexity or concavity up to the outer rim of the edge. It may also have a wavelike shape, which is rotated by 90 degrees compared to the previous (although this is not exclusive or definite) and moves from inside to outside. The last stated wavelike shape, from inside to outside, is meant to also signify a circular, bow shaped or curved design for the edge, as per invention.

For a two part as well as a three-part intervertebral disc prosthesis, as per invention, aspects of at least one sliding partner arise, as a result of the design of the edge regions of the sliding partners as per invention, in which a wavelike shape of the edge can be seen because the differently high edge regions interchange fluently or in one or more steps. As per invention, it is preferred for the two- and three-part prosthesis, that as a result of the wavelike design of at least one edge of a sliding partner, the maximally possible motion of the sliding partners towards each other is always larger in dorsoventral direction than in a laterolateral direction.

An important advantage of both intervertebral disc prostheses, as per invention, compared to prostheses known from the present state of the art is that during central load transfer over a large surface area as a result of the spherical sliding surface(s), the maximally possible inclination of the sliding partners towards each other in laterolateral and dorsoventral directions can be defined by the design, as per invention, of the differently high edge regions, whose surrounding breadth (of an edge) is equal or different, with the breadths of the edges of the sliding partners are uniform or variable. The differently high

edge regions interchange fluently and/or stepwise and it is solely possible by virtue of the resulting wavelike edge of at least one sliding partner to allow the maximal laterolateral motion- possibility to a lesser degree than the maximally possible inclination of the sliding partners towards each other in a dorsoventral direction. This correlates to the natural situation of an intact motion segment of a healthy lumbar and cervical spine, where the inclination and reclination is always clearly to a larger extent than the bending to the sides. Thus by virtue of the prosthesis, as per invention, a situation with respect to the maximally possible angles of inclination in the different directions is created within the motion segment, which comes very close to the physiological motion possibilities of inclination, reclination and lateral bending.

It is also feasible that as a result of the design of the edge regions of an intervertebral disc prosthesis, as per invention, the angles of inclination may be purposely adapted to the necessities that have to be considered for a patient, who is to have the prosthesis implanted. In such a way, by virtue of the design of the edge region, as per invention, a lateral angle of inclination of 0 degrees could also be set in the extreme case. As the prosthesis, as per invention, is to have as physiological as possible a motion and the resulting impossible bending is not physiological, the 0° motion presents an extreme exception for the design of the edge only.

It is also intended for a three-part prosthesis, as per invention, that the maximally possible angles of inclination of the upper and lower sliding partners are set solely with the wavelike edges of the middle sliding partner. This gives the possibility to only exchange the middle sliding partner with a sliding partner with a different edge design for the adaptation to the spine. The sliding partners assembled to the vertebral bodies do not need to be exchanged, but can remain within the patient, thus foreclosing damage to the vertebral bodies as a result of their removal.

As a result of the respective limitation of the motion possibilities of the edges, as per invention, an advantageous extra protection of the facet joints is achieved because they no longer need to limit the over-proportionate motion within the intervertebral space as is to be found in prostheses with spherical sliding surfaces and always equally high edge of the sliding partners. As a result of this an extreme or wrong stress on the facet joints can be mostly avoided.

With respect to the rotation of the sliding partners towards each other around a fictitious vertical axis, a free rotation of the sliding partners towards each other may theoretically be possible if for instance only one sliding partner has a wavelike edge, depending on the design of the edge region or the shaping of the wavelike regions and the position of the

respective maxima of these "waves". If, however, the edge regions of both sliding partners of a sliding area are designed in wavelike manner, it is possible that a specific motion is permitted and then a soft limitation of the rotation takes place, because the raisings and deepenings of the edges are rotated against each other and the prosthesis is "untwisted" against the load bearing down on the sliding partners. This is comparable with the guiding tracks of a screw cap, where the pitches are twisted against each other as well. The limitation of the rotation leads to an improved physiological situation within the motion segment, particularly of the facet joints, because in vivo an axial rotation is only possible to a little extent.

In an intervertebral disc prosthesis, as per invention, the maximally possible angle of inclination (at the same time aperture angle) of the sliding partners toward each other depends on the height of the spherical convexities with respect to their surrounding edges as well as the respective height, inclination and wavelike shaping of the edge surrounding the convexities and concavities.

Regarding the material of the prosthesis, as per invention, it is intended, that the sliding partners are built as a single piece or at least one sliding partner consists of at least two permanent or permanently, but reversibly attached parts, whereas the convexity(ies) and/or the concavity(ies) are the parts being permanent or permanently, but reversibly assembled to the corresponding sliding partner, or the convexity(ies) and/or concavity(ies) have suitable means for a permanent or permanent, but reversible assembly, whereby with each other connected parts consist of the same or different materials or the surfaces of the parts are coated equally or differently. As suitable means for the assembly, adaptations of the shape of the parts to be connected, as per invention, are intended, such as recesses or plane broadenings as part of the edge or being the whole edge. Depending on the chosen design, the respective sliding partner and/or convexity and/or concavity as well as the edge are designated as parts that are to be connected. In addition it is planned for a middle sliding partner that it results from the assembly of the respective parts.

In case that an intervertebral disc prosthesis consists of permanent or permanently, but reversibly attached parts, it is intended that the assembly is achieved by a groove/spring assembly, a guide tail and corresponding recess, a snap mechanism, by gluing or screwing.

For a three-part intervertebral disc prosthesis, as per invention, it is intended, that upper and lower sliding partner consist of the same material or are equally coated and the middle sliding partner is made of a different material or is differently coated.

The sliding partners are manufactured from well established materials in implantation techniques; for instance upper and lower sliding partner are made of rustproof metal and the middle sliding partner of medicinal polyethylene. Other combinations of materials are also possible. The use of other alloplastic materials, which may also be bio-active, is intended too. The sliding partners are high gloss polished at their communicating contact areas to minimize abrasion (low-friction principle). Furthermore a coating of the respective sliding partners with appropriate materials is also planned. Favoured materials are: titanium, titanium alloys, titanium carbide, alloys of cobalt and chrome or other appropriate metals, tantalum or appropriate tantalum alloys, suitable ceramic materials as well as suitable plastics or compound materials.

In a favored design of a three-part prosthesis, as per invention, the spherical-cap shaped convexities on their upper and lower sides of the middle sliding partner have identical or differing radii as well as the corresponding concavities in the upper and lower sliding partners. This increases the possibilities of the adaptation of the motion radii of an intervertebral disc prosthesis, as per invention, to the physiological motion radii.

In the case of identical as well as differing radii of curvature of the upper- and lower side of a middle sliding partner, the maximal height of the convexities on upper and lower side of the middle sliding partner is the same or different. Depending on the design, the height of the edge of a middle sliding partner is reduced by the same amount as the height of the convexity(ies), or the height of the edge remains the same or differs from the change of height of the convexity(ies), and by virtue of this the maximal height of the convexities of the upper and lower side remain the same or are different.

By this measure, as per invention, it is possible to reduce the total height of the whole prosthesis. Such a flatter prosthesis is particularly intended for the implantation in the cervical spine. It is, however, also feasible that such a flat prosthesis be applied for the lumbar region, if the intervertebral spaces are of a low height. On the whole, by this measure, as per invention, the possibility is given to adapt the prosthesis to the height of an intervertebral space by the selection of the respectively high middle sliding partner.

For the intervertebral disc prosthesis, as per invention, a maximal aperture angle of 6° - 10° during one-sided gap-closure of the sliding partners during extension or flexion, and of 0°- 6° during one-sided lateral gap-closure is intended, although 0° bending to the side presents more of an extreme and at least 3° bending should be enabled by the prosthesis. The concrete maximal ranges of motion can be constructively adapted for the lumbar and cervical spine, without the need of an “individual prosthesis” for every single intervertebral disc. The aperture angles correspond to the natural segment mobility and are reached by

suitable choices of convexities and concavities in connection with the design of the surrounding edges (see above). To compensate for the tolerances within the motion segment an additional 3° will be included for every direction of motion.

For a functional two-part as well as for a functional three-part intervertebral disc prosthesis, as per invention, a limited rotation of the sliding partners towards each other around a fictitious vertical axis of up to 3 degrees for the lumbar spine and up to 6 degrees for the cervical spine is intended to each side by virtue of the shaping of the edges, as per invention. To compensate for tolerances within the motion segment an additional 2 degrees to each side will be included.

Furthermore, a shift of up to 4 mm away from a midline sagittal section to dorsal of the convexity(ies) and corresponding concavity(ies) is intended in a two- and three-part intervertebral disc prostheses, as per invention. A dorsally displaced centre of rotation above all corresponds to the physiological situation of the transition between lumbar spine and sacral bone; on the other hand parallel to that, the differences correlating to the physiological situation between the possible angles of inclination during extension and flexion are thus reached.

It is further intended that the edges of the sliding partners outwardly close rectangularly, otherwise inclined, curved, combined straight, curved and/or angled. Particularly in the case of a three-part prosthesis, a design is feasible, in which the upper and lower side of the sliding core simply end perpendicularly or curved towards each other in their periphery and in which the breadth of the edge is not substantially differently designed compared to the upper and lower sliding partner. Thus the middle sliding partner can remain in between the upper and lower sliding partner during terminal inclination too. By virtue of this a compact and economic (w.r.t. space) construction of an intervertebral disc prosthesis, as per invention, is possible.

A slip out of the middle sliding partner out of this “compact“ design of a three-part intervertebral disc prosthesis, as per invention, is on one hand prevented by the motion adapted heights of the convexity(ies) and the corresponding concavity(ies) starting with the edge around the articulation areas and on the other hand by the gap-closure between the edges of the sliding partners at terminal inclination. The convexities and the wave form in the edge region are designed in such a way that the convexities interdigitate deeply enough into the articulating concavities, particularly during reclination. A sufficient opening of the whole prosthesis post-operatively, which is a prerequisite for a slip out of the middle sliding partner, is thus not possible.

Furthermore it is intended as per invention, that in the case of a middle sliding partner of a three-part prosthesis, as an additional safeguard, a stop as a part of the outer edge of the middle sliding partner is provided against a slip-out, slip-away or slip-aside (luxation) out of the prosthesis during gap-closure of all three sliding partners. The stop of the middle sliding partner is located next to the periphery of the upper and/or lower sliding partner and it is higher at least on the upper or the lower side than the edge of the middle sliding partner.

This stop, as an additional safeguard against a slip-out, slip-away or slip-aside (luxation) out of the prosthesis can, as per invention also be designed in such a way that it is a part of the edge of the middle sliding partner. It is higher than the edge of the middle sliding partner at the upper or lower side and is lead within a groove in the edge of the upper and/or the lower sliding partner with clearance necessary for the maximal sliding motion of the sliding partners.

As per invention, a stop is an outwardly directed extension of the edge of a middle sliding partner, which, because of its embodiment, as result of its design, is suited to prevent a slip-out of the middle sliding partner out of the concavities of the upper and lower sliding partner. It is not necessary that a stop encloses the middle sliding partner completely, because this could result in a limitation of the maximal mobility of all sliding partners; where required, it is rather arranged in defined distances or opposite of positions of the edge, which represent possible positions for a slip-out of the middle sliding partner. If the stop is higher on the upper and lower side than the edge of the middle sliding partner, it can for instance be shaped like a drawing-pin, sticking with the tip from outside into the edge, so that the head of the drawing-pin juts out over the upper and lower edge of the middle sliding partner and prevents a slip-out of the middle sliding partner during a terminal inclination in direction of the drawing pin by stopping its movement via contact to the upper and lower sliding partner.

If a stop, as a safeguard to prevent slip-out, is part of the edge of a sliding partner, the height of the convexity depends only - with regard to the anatomy and the material properties - on the required maximal inclination angles, which are also influenced by this (see above).

A stop to secure the middle sliding partner of a three-part prosthesis is advantageously shaped in such a way that it is part of the contact areas during terminal inclination of the edges of the sliding partners. Due to this fact the stop functions not only as a safeguard, but it additionally increases the load bearing area during terminal inclination of the sliding partners; the advantages of this have already been described. The possibility for such a

design, however, depends crucially on the external shape of the upper and lower sliding partner and the respective breadth of the edges of the convexity and concavity.

In a further design of a three part intervertebral disc prosthesis it is intended that the height of the middle sliding partner partly or totally continuously increases beginning from the transition area between the convexity and the edge up unto the peripheral edge area. This is intended without the size of the aperture angle changing as a result of an adaptation to the height of the edge of the upper and lower sliding partner. This “dovetail” shape of the edge of the middle sliding partner increases the safeguard against dislocation.

As per invention, a shape for the upper and lower sliding partner is intended for a three-part prosthesis, in which the peripheral edge areas are complete or partly hook-shaped, perpendicular, otherwise angular, curved or a combination thereof in direction of the other peripheral sliding partner. In this design, the edge of the middle sliding partner is narrower there, so that the middle sliding partner is partly or completed covered by the features of one or both outer sliding partners, in order to prevent a slip-out of the middle sliding partner. Advantageously, the edge of the middle sliding partner is adapted in such a way to the shape of the edge of the outer sliding partners, that during terminal gap-closure as high as possible an area of the articulating sliding partners comes into contact.

Further, it is intended for an intervertebral disc prosthesis, as per invention, that the outer circumferences of the upper and lower sliding partner may taper off from dorsal to ventral (lumbar spine) or from ventral to dorsal (cervical spine) in a transversal view. This tapering off of the outer circumferences of the upper and lower sliding partner may laterally be in the form of identical curves and is preferably a segment of a circle. Where necessary, area and shape of the outer circumference of the upper and lower sliding partner can be equal or unequal and thus adapted by this to the size of the respective vertebral body with which they will be assembled.

The tapering off shape of the circumference of the upper and lower sliding partner the prosthetic plates on the whole corresponds to the usable area of a vertebral body in a transversal view and leads in that way to an optimal use of the area at disposal for anchoring of upper and lower sliding partner with the aim of a large area for load transfer.

Adaptations to the sliding partners, as per invention, of the intervertebral disc prosthesis are further intended, in which upper and/or lower sliding partner are built in such a way in a frontal and/or sagittal section, that the out- and inside of the upper and/or lower sliding partner are parallel or unparallel to each other. By this measure an intervertebral disc

prosthesis, as per invention, can be adapted to vertebral body endplates, which are not standing parallel in a frontal view or which, in a sagittal view, should form an optimal lordosis and positioning of the sliding areas.

It is further intended, that in a two- and three-part design, as per invention, the convexity (two-part prosthesis) or the middle sliding partner (three-part prosthesis) is parallel or unparallel with respect to a fictitious horizontal. In the case of an unparallel design, the upper- and lower sides stand in an angle with respect to a fictitious horizontal, with the angles being the same above and below or different with a middle sliding partner. The convexity(ies) and corresponding concavity(ies) in the two- and three-part prosthesis are symmetrical or asymmetrical in their surface design. By virtue of the angular convexity or the angular middle sliding partner, adaptations to asymmetries of the intervertebral space, into which the prosthesis will be implanted, are also possible.

For a secure anchorage of the implants within the intervertebral space, an edge and/or plane interdigitation of the exterior sides of the upper and lower sliding partner serves for the connection with an upper and lower vertebral body. The exterior sides themselves are flat or convex in shape and it is possible to coat the interdigitation or the vertebra-directed surfaces with or without interdigitation bio-actively or bluntly. To minimize the risk of a fracture of the vertebral body an anchorage with three ventrally positioned and two dorsally positioned anchoring teeth is preferred. As an alternative laterally continuously arranged rows of teeth are favoured for an improved guidance of the upper and lower sliding partner during implantation between the vertebral bodies, because the forceps of the surgeon can grip in the middle gap between the rows of teeth or into holes of the upper and lower sliding partner at level with the teeth.

To facilitate implantation or explantation of the intervertebral disc prosthesis, the upper and/or lower sliding partner is furbished with a provision for instruments in a further design. These provisions preferably consist of holes or moulds, into which the required instrument of the surgeon can grip so that a secure fixation of the respective sliding partner is possible.

Furthermore as absolute measurements for an intervertebral disc prosthesis, as per invention, a maximal breadth (frontal view) of 14 to 48 mm, a maximal depth (sagittal view) of 11 to 35 mm and a maximal height of 4 to 18 mm is intended. These measurements are orientated to the natural conditions of the lumbar and cervical spine and assure that the situation with an intervertebral disc prosthesis, as per invention, comes very close to the *in vivo* situation.

Further, for an intervertebral disc prosthesis, as per invention, one or more X-ray contrast giving markers are provided, which are located under the surface of each of the non X-ray contrast giving parts of the prosthesis. That way it is possible to exactly control the position of these parts of the intervertebral disc prosthesis after the implantation. Furthermore it is possible to check, if these parts have changed their position or if they are still in the right position in defined timely intervals.

Further useful measures are described in the dependent claims; the invention is described in the following by examples and figures; it shows:

Fig. 1a - c	spatial frontal views of a functional three-part prosthesis, as per invention, for the lumbar spine a: frontal view from dorsal b: frontal view from ventral c: median frontal section
Fig. 2 a, b	spatial sagittal views of a functional three-part intervertebral disc prosthesis, as per invention: a: sagittal view b: median sagittal section
Fig. 3 a, b	spatial transversal views: a: inner side of upper and lower sliding partner b: inner side of upper or lower sliding partner with middle sliding partner on it
Fig. 4 a - c	schematic depiction of different shapes of the upper and lower sliding partner for the lumbar spine
Fig. 5 a, b	schematic depiction the arrangement of anchoring teeth on the outside of the upper and lower sliding partner for the lumbar spine

Fig. 6 a - e schematic spatial depiction of different wave-shaped designs of a middle sliding partner of a three-part intervertebral disc prosthesis, as per invention

Fig. 7 a - g schematic spatial depiction of a three-part intervertebral disc prosthesis, as per invention, with stepped design of the edge und protection against dislocation of the middle sliding partner

Figures 1 a – c show different spatial frontal views of a model of a functional three-part intervertebral disc prosthesis, as per invention, for the lumbar spine, with the middle sliding partner 13 having an edge 18. As per invention, however, other models of a three-part intervertebral disc prosthesis are also planned, where the middle sliding partner 13 is constructed without an edge 18.

Figure 1a shows a frontal view of the dorsal side 23 and figure 1 b of the ventral side 24 of an intervertebral disc prosthesis, as per invention. In an intervertebral disc prosthesis, as per invention, intended for the implantation into the lumbar spine, the ventral side 24 (figure 1 b) is narrower than the dorsal side 23 (figure 1 a), as a result of the ventrally tapering off shape of the upper and lower sliding partner 11, 12. For an implantation of the intervertebral disc into the cervical spine, the external circumference of the upper and lower sliding partner 11, 12 tapers off dorsally.

In the models depicted in figures 1 a and b the height of the edge 18 of the middle sliding partner 13 is the same around the convexities 16 of the upper and lower side of the middle sliding partner 13. The edges 18 of the upper and lower sliding partner 11, 12 are constructed laterally higher than dorsally and ventrally. The transitions between the different heights of the edges 18 interchange fluently, so that a wavelike shape of the edges 18 arises. This wavelike shape effects the desired laterolateral lesser possible angle of inclination compared to the dorsoventral inclination of the sliding partners 11, 12, 13 towards each other.

Figure 1 c shows a median frontal section of the model depicted in figures 1 a and b of an intervertebral disc prosthesis, as per invention. In this section it can be clearly seen that the lateral apertures 22 to both sides of the convexity 16 of the middle sliding partner 13 and concavity 17 of the upper and lower sliding partner 11, 12 are identical.

Figures 2 a and b show a spatial sagittal section of a functional three part intervertebral

disc prosthesis, as per invention. In both illustrations the upper sliding partner 11, the lower sliding partner 12 as well as the interpositioned sliding partner 13 are depicted. In the depicted model, the middle sliding partner 13 has an edge 18, which is an optional characteristic.

Figure 2a shows a sagittal over view of the lateral side of the prosthesis. The equally highly shaped edge 18 of the middle sliding partner 13 can be seen as well as each lateral higher edge 18 of the upper sliding partner 11 and of the lower sliding partner 12. The transition between the laterally higher edges 18 of the upper and lower sliding partner in dorsal and ventral direction, is fluent and bow shaped in this view. As soon as the prosthesis is turned dorsally or ventrally, however, the upper edge 18 and the lower edge 18 form a wavelike shape.

Figure 2 b shows a median sagittal section of the intervertebral disc prosthesis, as per invention, depicted in figure 2 a, with upper and lower sliding partner 11, 12, and an interpositioned middle sliding partner 13. The sliding partners 11, 12, 13 articulate via the convexities 16 and the concavities 17. As the edges of the upper sliding partner 11 and the lower sliding partner 12, as per invention, are dorsally and ventrally not constructed as high as laterally, the fluent transition of the edges 18 is depicted as a black area in the median sagittal section. Because the edge 18 of the middle sliding partner in the depicted model is of the same height in its complete breadth all around, no transition of the edges can be seen.

Figure 3 a shows a transverse section of an upper and lower sliding partner 11, 12 of an three-part intervertebral disc prosthesis, as per invention, or the sliding partner with concavity 17 of a two-part intervertebral disc prosthesis, as per invention. The external shape of the sliding partner 11, 12 tapers off from the dorsal side 23 to the ventral side 24 in the lumbar spine and vice versa in the case of the cervical spine. It can be well seen that the tapering off of the depicted model is in the form of sections of a circle. The differences in height of the edges 18 of a sliding partner 11, 12 which are dorsally and ventrally not constructed as highly as laterally, are indicated by the shading in the illustration.

The concavity 17 is located in the middle, or also displaced up to 4mm dorsally (not shown here). This is correspondingly constructed to the convexity 16, which is shaped like the cap of a sphere (figure 3 b). Because of the differently high edges 18, which completely enclose the concavity 17, the concavity does not appear as a circle in the overview, but rather as a dorsally and ventrally flattened round shape.

Figure 3 b shows a transversal section of an upper and lower sliding partner 11, 12, of an intervertebral disc prosthesis, as per invention, in whose concavity a middle sliding partner 13 with an edge 18 is lying. In this aspect too, the tapering off outer shape of the upper and lower sliding partner 11, 12, from the dorsal side 23 and the ventral side 24 (lumbar spine) can be seen. The shadings of the edges 18 indicate the differently high edge regions dorsoventrally and laterally. The edge 18 of the middle sliding partner 13 is of equal height around the convexity 16 and therefore unshaded.

The figures 4 a - c each schematically show a top view onto alternative designs of the circumference of upper and lower sliding partner 11, 12. The small letters indicate the orientation with respect to the dorsoventral alignment of the plates for the lumbar spine (d=dorsal; v=ventral), which is however reversed for the cervical spine (v=dorsal; d=ventral).

The figures 5 a and 5 b show alternative arrangements of the anchoring teeth 25 on the outside of the upper and lower sliding partner 11, 12. Again the orientation of the sliding partners with respect to the dorsoventral alignment is indicated by the small letter (d=dorsal; v=ventral). Dorsally, there are no anchoring teeth 25 intended in the middle, because this results on one hand in protecting the vertebral bodies and on the other hand facilitates the implantation. For the cervical spine the reversed orientation is also without middle dorsal anchoring teeth 25.

Figures 6 a – e each show a middle sliding partner 13 with an wavelike edge design in different spatial views. The middle sliding partner 13 rotates from the left to the right, each time around a horizontal axis around 180 degrees. Beginning from figure 6 a, in which the middle sliding partner has only one wave, the number of waves increases up to figure 6 e. The transition between the undulations waves is fluent.

Figures 7 a – g each show the same prosthesis with graduated waves of the sliding partners 11, 12, 13, with the height of the edge of the middle sliding partner 13 increasing from the convexity to the rim of the edge. By this measure a dislocation of the middle sliding partner 13 from within the prosthesis is to be prevented.

Figure 7 a shows from left to right, the prosthesis in a median sagittal section without motion, (left is the front and right the back), during inclination to the front, without inclination, during reclination and in an oblique overview without inclination (left is the back, right the front).

Figure 7 b shows the prosthesis in the same positions of the sliding partners 11, 12, 13 in a median frontal section. The inclination and reclination correlates with a right- and left-

sided bending.

Figure 7 c shows front and back as well as the inside of the upper sliding partner 11 in several views.

Figure 7 d shows the front and back as well as the articulation areas of the middle sliding partner 13 in different views and

Figure 7 e shows the lower sliding partner in a front and rear view as well as the inside in several views.

Figure 7 f shows the prosthesis from the front, from the side, during bending to the right, in reclination and during ventrolateral inclination.

In figure 7 g the prosthesis is depicted during rotations. To the far left a rotation can be seen, in which the middle sliding partner 13 is in a zero-position and the upper sliding partner 11 is rotating in a clockwise, and the lower sliding partner 12 in an anticlockwise direction. In the second figure from the left the rotation of upper and lower sliding partner 11, 12 is reverse. In the middle the prosthesis can be seen without rotation. The two right parts of the figure each show top views of the rotations depicted on the left.

Reference Numbers

11	upper sliding partner
12	lower sliding partner
13	middle sliding partner
16	convexity
17	concavity
18	edge
22	aperture
23	dorsal side of a sliding partner (lumbar spine)
24	ventral side of a sliding partner (lumbar spine)
25	anchoring teeth

Claims

1. Functionally two-part intervertebral disc prosthesis for the total replacement of the intervertebral disc within the lumbar and cervical spine, comprising an upper and a lower articulating sliding partner, where the upper sliding partner has an upper surface with means for an assembly to an upper vertebral body and the lower sliding partner has a lower surface with means for an assembly to a lower vertebral body and wherein the sliding partners have sliding areas on their inner sides that are directed towards each other, wherein

   a) a first sliding partner (11, 12) constructed in such a manner, that the opposite side of the side for the assembly with a vertebral body has a convexity (16), and the geometry of the convexity (16) corresponds to a cap of a sphere, wherein the convexity (16) being completely surrounded by a first edge (18), and

   b) a second sliding partner (11 or 12), having a concavity (17) on the opposite side of the side for the assembly with a vertebral body, and the geometry of the concavity (17) is defined by a recess corresponding with the spherical convexity (16) of the first sliding partner (11, 12), wherein the recess is completely surrounded by a second edge (18), and

   c) either the first or the second edge (18) has a wavelike shape surrounding the convexity or concavity, and

   d) the respective other edge (18) of the other sliding partner (11 or 12) has a wavelike shape or is plane, wherein a wavelike shaped edge surrounds the concavity or convexity, wherein

   e) the differences of the heights of a wavelike edge (18) changes seamlessly and/or in one or several steps, and

   f) that during terminal inclination and/or rotation of the sliding partners (11, 12) towards each other a definite limitation of the maximal possible motion of the sliding partners (11, 12) arises as a result of a gap-closure of the edges (18), and

   g) the maximal possible motion of the sliding partners (11, 12) towards each other is always greater in dorsoventral direction than in laterolateral direction due to the wavelike construction of at least one edge (18).

2. Functionally three-part intervertebral disc prosthesis for the total replacement of the intervertebral disc within the lumbar and cervical spine, comprising of an upper, a middle and a lower articulating sliding partner, wherein the upper sliding partner has an upper surface with means for an assembly to an upper vertebral body and the lower sliding partner has a lower surface with means for an assembly to a lower vertebral body and wherein between the upper and lower sliding partner a further, middle sliding partner with an upper and lower surface is located, wherein between the inner side of the upper sliding partner and the upper side of the middle sliding partner as well as between the lower side of the middle sliding partner and the inner side of the lower sliding partner, respectively, sliding areas are located, wherein

   a) the middle sliding partner (13) has on the upper and lower side convexities (16), and the geometry of these convexities (16) each correlate with a cap of a sphere, and

   b) the upper and lower sliding partner (11, 12) are constructed with a concavity (17) on the inner side, and the geometry of these concavities (17) is defined by a corresponding recess to the convexities (16) of the upper and lower side of the middle sliding partner (13), each being totally surrounded by an edge (18), and

   c) the edge (18) of the other upper or lower sliding partner has a wavelike shape surrounding the concavity (17), and

   d) the edge (18) of the respective other, upper or lower, sliding partner (11, 12) has a wavelike shape or is plane, wherein a wavelike shaped edge surrounds the concavity, wherein,

   e) the differences of the heights of a wavelike edge (18) change seamlessly and/or in one or several steps, and

   f) during terminal inclination and/or rotation of the sliding partners (11, 12, 13) towards each other a defined limitation of the maximal possible motion arises as a result of a gap-closure of the edges (18), and

   g) the maximal possible motion of the sliding partners (11, 12 and 13) towards each other is always greater in dorsoventral direction than in laterolateral direction due to the wavelike construction of at least one edge (18).

3. Intervertebral disc prosthesis according to claim 2, wherein the convexities (16) of the middle sliding partner (13) are each surrounded on the upper and lower side by an edge (18), which has the same height or is differently high or is wavelike shaped along the entire breadth surrounding the respective convexity, wherein the differences in heights of the wavelike edge (18) change seamlessly and/or in one or several steps.

4. Intervertebral disc prosthesis according to any one of claims 1 to 3, wherein as the result of the wavelike edge shape of at least one edge (18) a greater inclination of the sliding partners (11, 12 and 13) towards each other is possible in ventral direction than in a dorsal direction.

5. Intervertebral disc prosthesis according to any one of claims 1 to 4, wherein the maximal possible angle of inclination (aperture angle) of the sliding partners (11, 12 and 13) towards each other depends on

   a) the height of the spherical convexity(ies) (16), in case that an edge is present with respect to the edge (18) surrounding it, as well as

   b) the respective height, inclination and wavelike shape of the edge (18) surrounding the convexity(ies) (16) and concavity(ies) (17).

6. Intervertebral disc prosthesis according to any one of claims 1 to 5, wherein the sliding partners (11, 12, 13) are constructed in one piece.

7. Intervertebral disc prosthesis according to any one of claims 1 to 5, wherein at least one sliding partner (11, 12 and 13) consists of at least two permanent or permanently, but reversibly assembled parts, wherein either the convexity(ies) (16) and/or the concavity(ies) (17) are the parts that are permanent or permanently, but reversibly assembled to the respective sliding partners (11, 12 and 13), or the convexity(ies) (16) and/or concavity(ies) (17) have at their basis suitable means for a permanent or permanent, but reversible assembly.

8. Intervertebral disc prosthesis according to any one of claims 1 to 7, wherein the sliding partners (11, 12 and 13) and/or with each other connected parts consist of the same or different materials.

9. Intervertebral disc prosthesis according to any one of claims 1 to 8, with the surfaces of the sliding partners (11,12 and 13) and/or with each other connected parts are coated equally or differently.

10. Intervertebral disc prosthesis according to any one of claims 7 to 9, wherein a permanent or permanent, but reversible assembly is reached by a tongue and groove assembly, a track and corresponding recess, a snap mechanism, gluing or screwing.

11. Intervertebral disc prosthesis according to any one of the claims 2 to 10, wherein the upper and lower sliding partner (11, 12) comprise the same material or are equally coated and the middle sliding partner (13) is made of a different material or is differently coated.

12. Intervertebral disc prosthesis according to claim 2 or any claim dependent thereon, wherein the spherical cap-shaped convexities (16) on upper and lower side of the middle sliding partner (13) as well as the corresponding concavities (17) of the upper and lower sliding partner (11, 12) have identical or different radii.

13. Intervertebral disc prosthesis according to claim 2 or any claim dependent thereon, wherein the maximal height of the convexities (16) of the middle sliding partner (13) is equal or different on the upper and lower side.

14. Intervertebral disc prosthesis according to any one of claims 1 to 13, wherein the maximal height of a convexity (16) is less than a hemisphere and/or in the case that an edge is present, the height of the edge (18) is reduced, wherein the height of the convexities (16) is equal or different on the upper and lower side in the case of a three-part intervertebral disc prosthesis.

15. Intervertebral disc prosthesis according to any one of claims 1 to 14, wherein the maximal aperture angle at a one-sided gap-closure of the sliding partners (11, 12 and 13) during extension or flexion is between 6 and 10 degrees and at a lateral gap-closure is between 0 and 6 degrees, with a tolerance of an additional 3 degrees in every direction.

16. Intervertebral disc prosthesis according to any one of claims 1 to 15, wherein the shape of the edges (18) allows for a limited rotational motion of the sliding partners (11, 12, and 13) with respect to a fictitious vertical axis of up to 3 degrees for the lumbar spine and of 6 degrees for the cervical spine to every side, with a tolerance of an additional 2 degrees to each side.

17. Intervertebral disc prosthesis according to any one of claims 1 to 16, wherein the convexity(ies) (16) and the respective corresponding concavity(ies) (17) are dorsally

displaced up to 4 mm away from a centric frontal section.

18. Intervertebral disc prosthesis according to any one of claims 1 to 17, wherein the edges (18) of the sliding partners (11, 12 and 13) end outwardly perpendicular, otherwise angled, curved or have a combination of straight, curved, and /or angular.

19. Intervertebral disc prosthesis according to claim 2 or any claim dependent thereon, wherein as an additional safeguard for the middle sliding partner (13) with edge (18) against a slip-out out of the prosthesis during a gap-closure of all three sliding partners (11, 12, 13) a stop is part of the edge (18) of the middle sliding partner (13), that is located outside the upper and/or lower sliding partner (11, 12), wherein the stop is at least on the upper or the lower side higher than the edge (18) of the middle sliding partner (13).

20. Intervertebral disc prosthesis according to claim 2 or any claim dependent thereon, wherein as an additional safeguard for the middle sliding partner (13) with edge (18) against a slip-out out of the prosthesis during a gap-closure of all three sliding partners (11, 12, 13) a stop is part of the edge (18) of the middle sliding partner (13), which is higher on the upper and/or the lower side than the edge (18) of the middle sliding partner (13) and is guided within a groove in an edge area of the upper and/or lower sliding partner (11, 12) with the necessary clearance for the maximal sliding motions of the sliding partners (11, 12, 13).

21. Intervertebral disc prosthesis according to claim 2 or any claim dependent thereon, wherein as an additional safeguard for the middle sliding partner (13) with edge (18) against a slip-out out of the prosthesis during a gap-closure of all three sliding partners (11, 12, 13) the edge (18) of the middle sliding partner (13) partly or totally increases continuously in height from the transition area of the convexity to the periphery and the edge of the upper and/or lower sliding partner (11,12) levels off to the same degree.

22. Intervertebral disc prosthesis according to claim 2 or any claim dependent thereon, wherein as an additional safeguard for the middle sliding partner (13) against a slip-out out of the prosthesis during a gap-closure of all three sliding partners (11, 12, 13), the most outward portion of the upper and/or lower sliding partner (11, 12) are completely or partly hook-shaped, perpendicular, otherwise angular, curved or a combination thereof in a direction of the other external sliding partner.

23. Intervertebral disc prosthesis according to any one of claims 1 to 22, wherein surface and shape of the outer circumference of the upper and lower sliding partner (11, 12) are equal or unequal and are adapted by this to the corresponding size of the vertebral body with which they are to be assembled.

24. Intervertebral disc prosthesis according to any one of claims 1 to 23, wherein upper and/or lower sliding partner (11, 12) are constructed in such a manner that in frontal and/or sagittal section the outside and inside of the upper and/or lower sliding partner (11, 12) run parallel or non-parallel.

25. Intervertebral disc prosthesis according to any one of claims 1 to 24, wherein the convexity of a two part prosthesis (11, 12) and the upper and lower side of the middle sliding partner (13) of a three part prosthesis are parallel or non-parallel with respect to a horizontal, and thus run in a defined angle relative to each other, with the convexity(ies) being symmetrical or asymmetrical.

26. Intervertebral disc prosthesis according to any one of claims 1 to 25, wherein the upper and lower sliding partner (11, 12) are plane or convex and coated bio-actively or bluntly on the outer surface and have for their primary anchorage with the vertebral bodies teeth (25), that are either arranged from dorsal to ventral laterally straight or oblique or ventral and dorsal in straight direction, and in the dorsal row anchoring teeth (25) are arranged laterally only.

27. Intervertebral disc prosthesis according to any one of claims 1 to 26, wherein the upper and/or lower sliding partner (11, 12) have means for an instrument to engage for implantation or explantation.

28. Intervertebral disc prosthesis according to any one of claims 1 to 27, wherein it has a maximal breadth (frontal view) from 14 to 48 mm, a maximal depth (sagittal view) from 11 to 35 mm and a maximal height from 4 to 18 mm.

29. Intervertebral disc prosthesis according to –any one of claims 1 to 28 for the implantation into the lumbar spine, with the outer circumference of the upper and lower sliding partners (11, 12) tapering off ventrally in the transversal view.

30. Intervertebral disc prosthesis according to any one of claims 1 to 28 for the implantation into the cervical spine, with the outer circumference of the upper and lower sliding partners (11, 12) tapering off dorsally in the transversal view.

31. Intervertebral disc prosthesis according to claim 29 or 30, wherein the diminution of the outer circumference of the sliding partners (11, 12), has laterally respective identical curvations or is asymmetric.

32. Intervertebral disc prosthesis according to any one of claims 1 to 31, wherein the prosthesis has one or more X-ray contrast giving tags under their surface.

Fig. 1 a

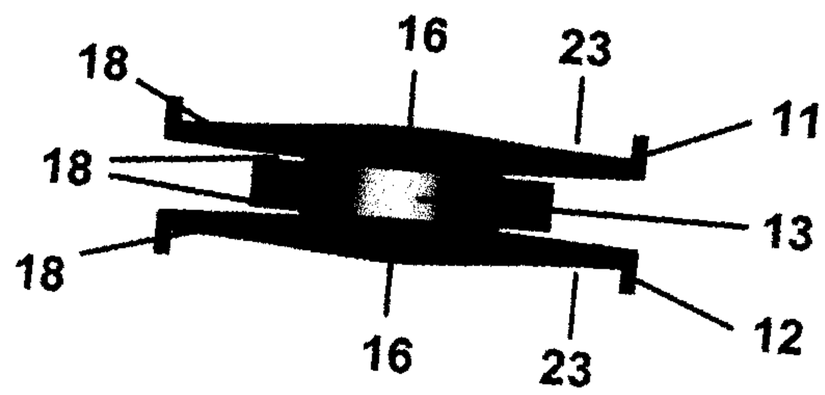

Fig. 1 b

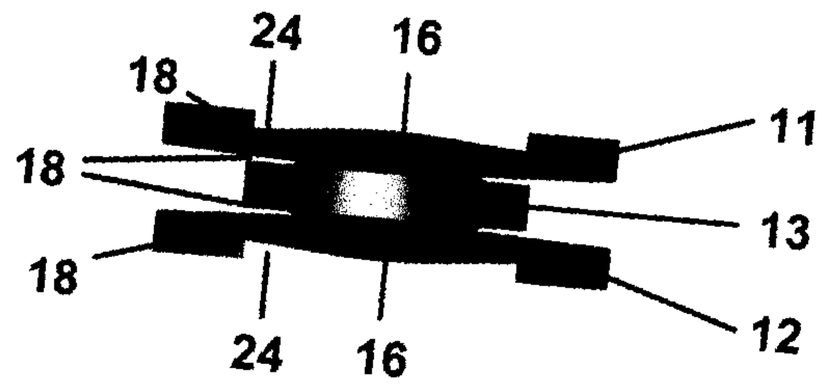

Fig. 1 c

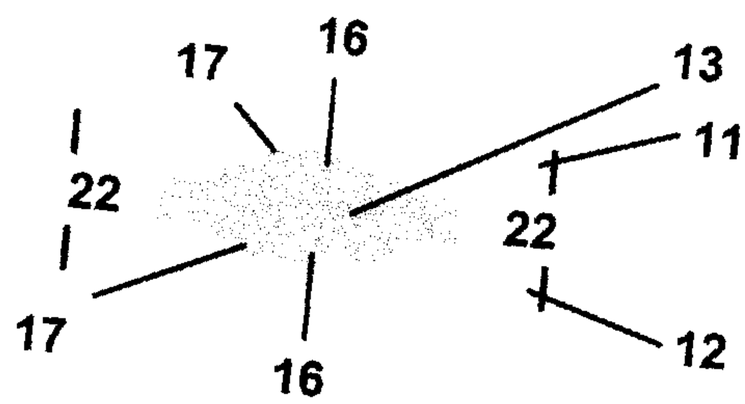

Fig. 2 a

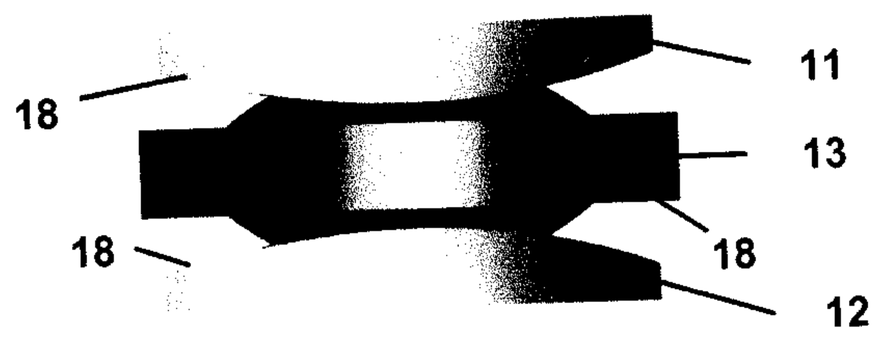

Fig. 2 b

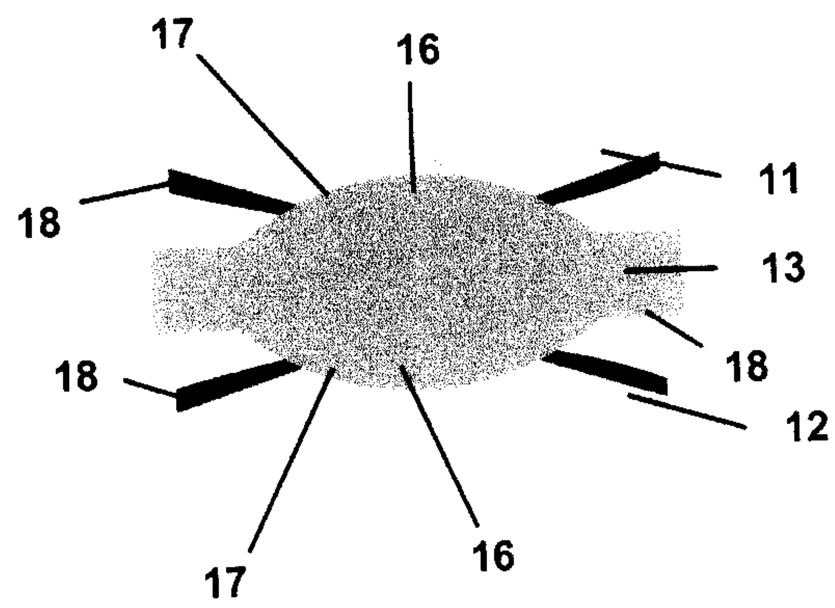

Fig. 3 a

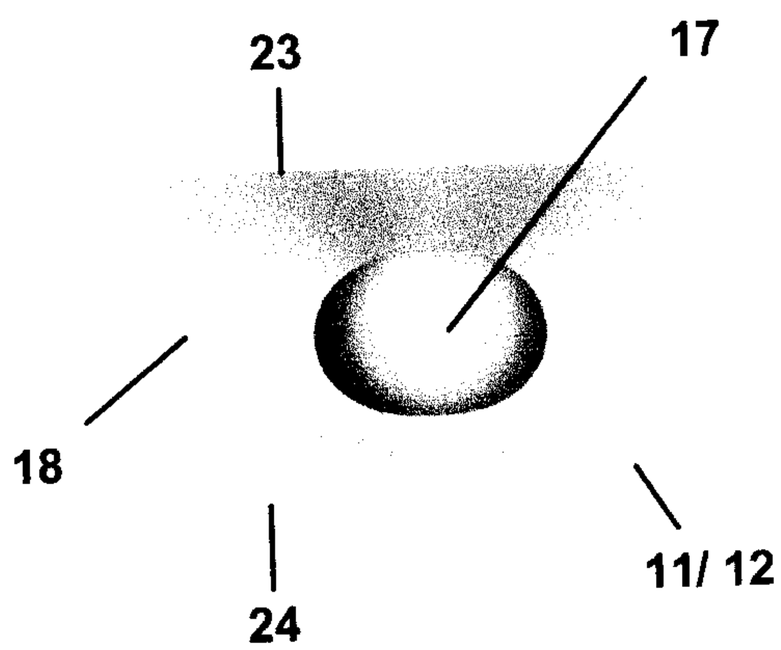

Fig. 3 b

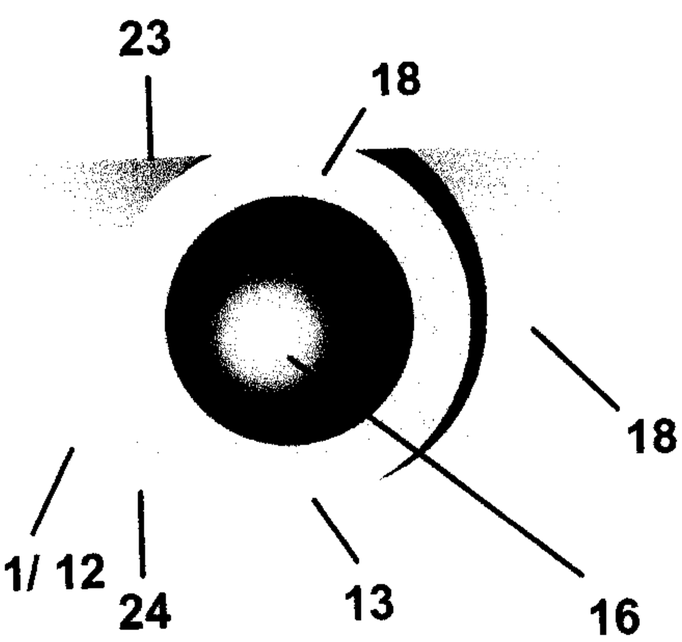

Fig. 4 a

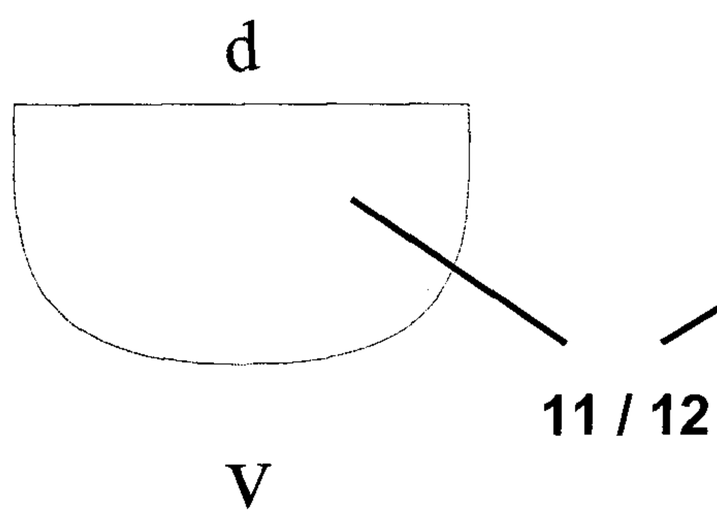

Fig. 4 b

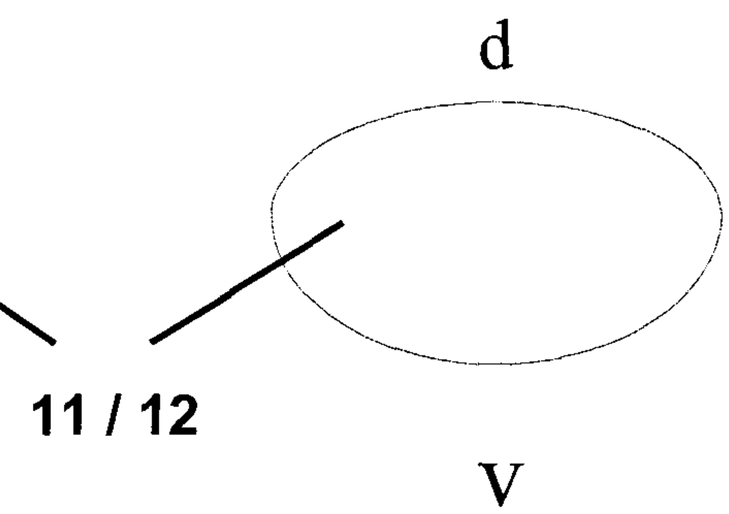

Fig. 4 c

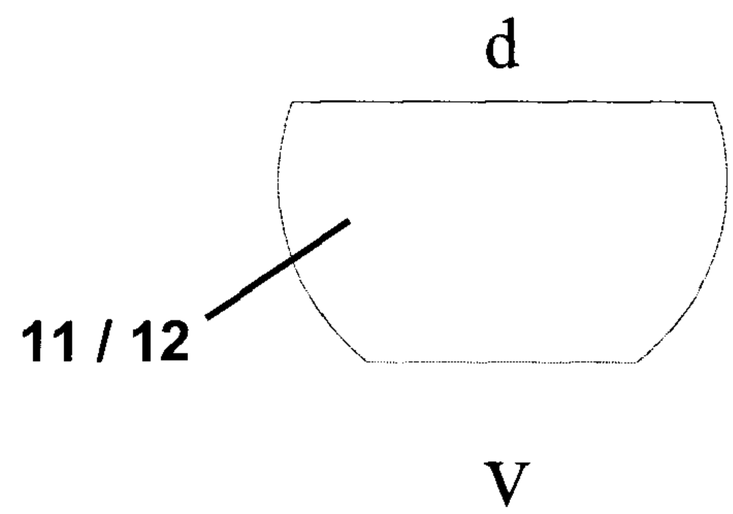

Fig. 5 a

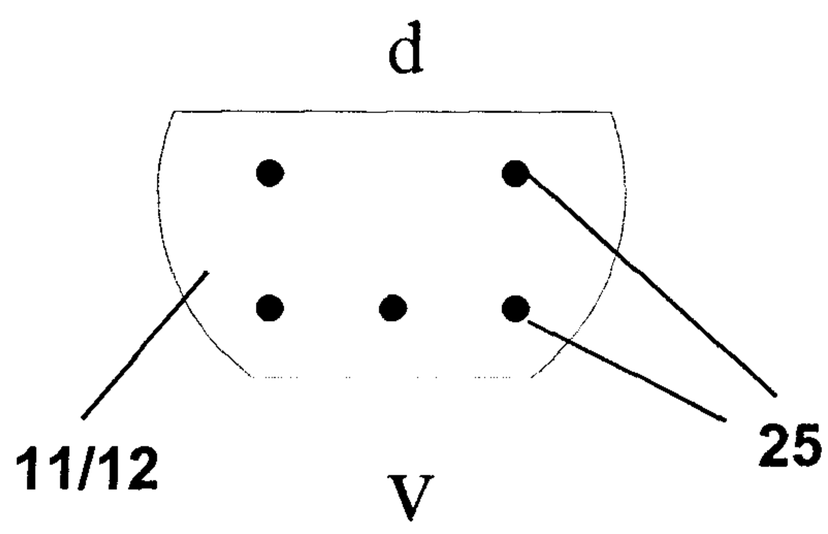

Fig. 5 b

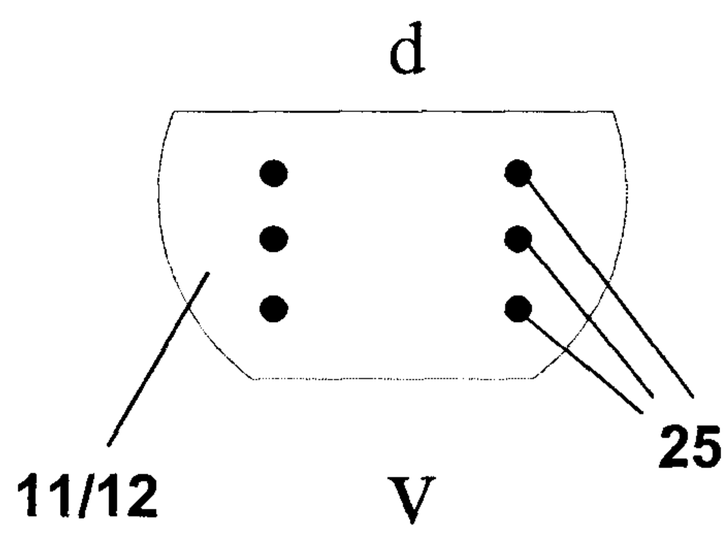

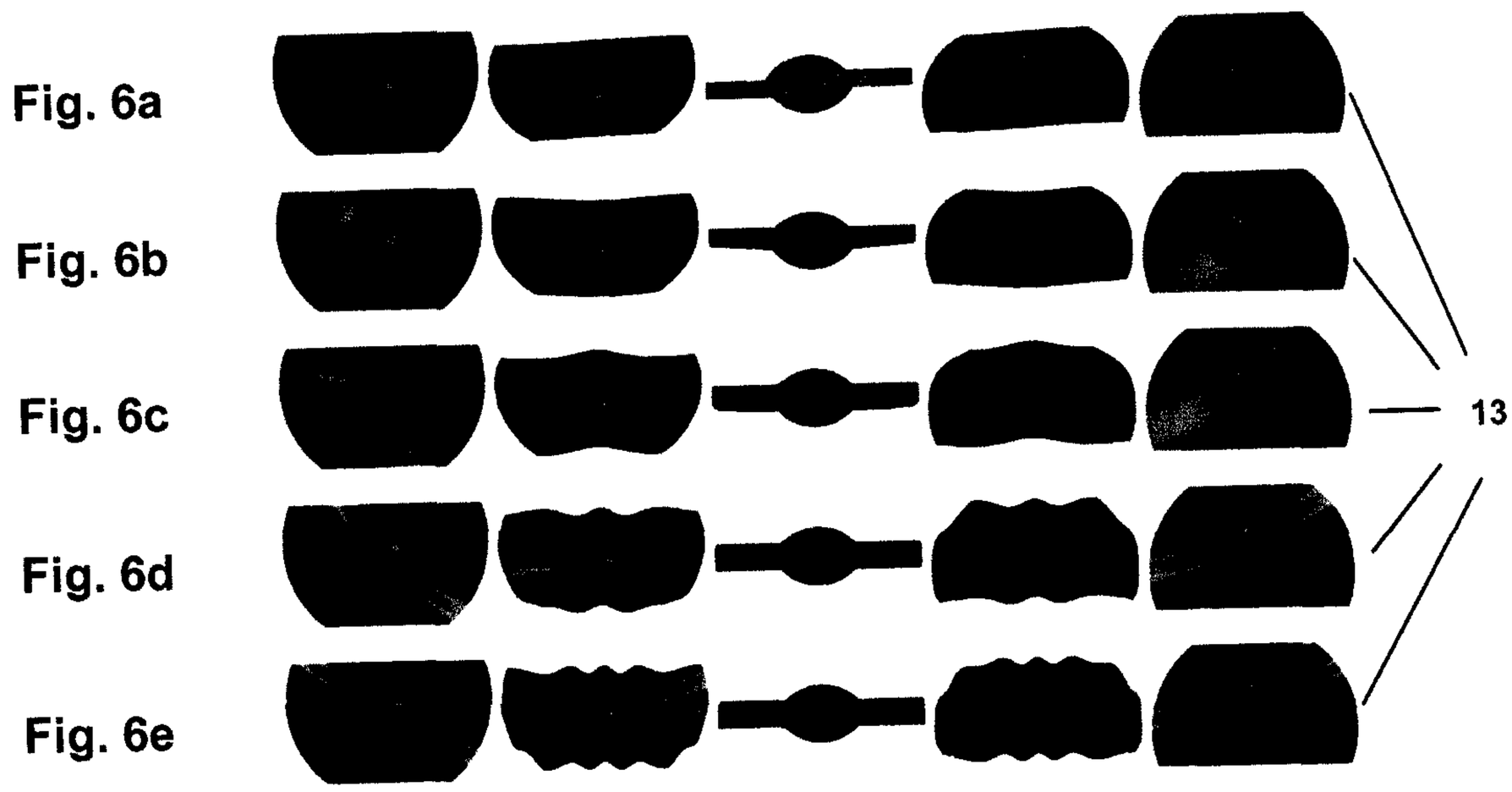
Fig. 6a
Fig. 6b
Fig. 6c
Fig. 6d
Fig. 6e
13

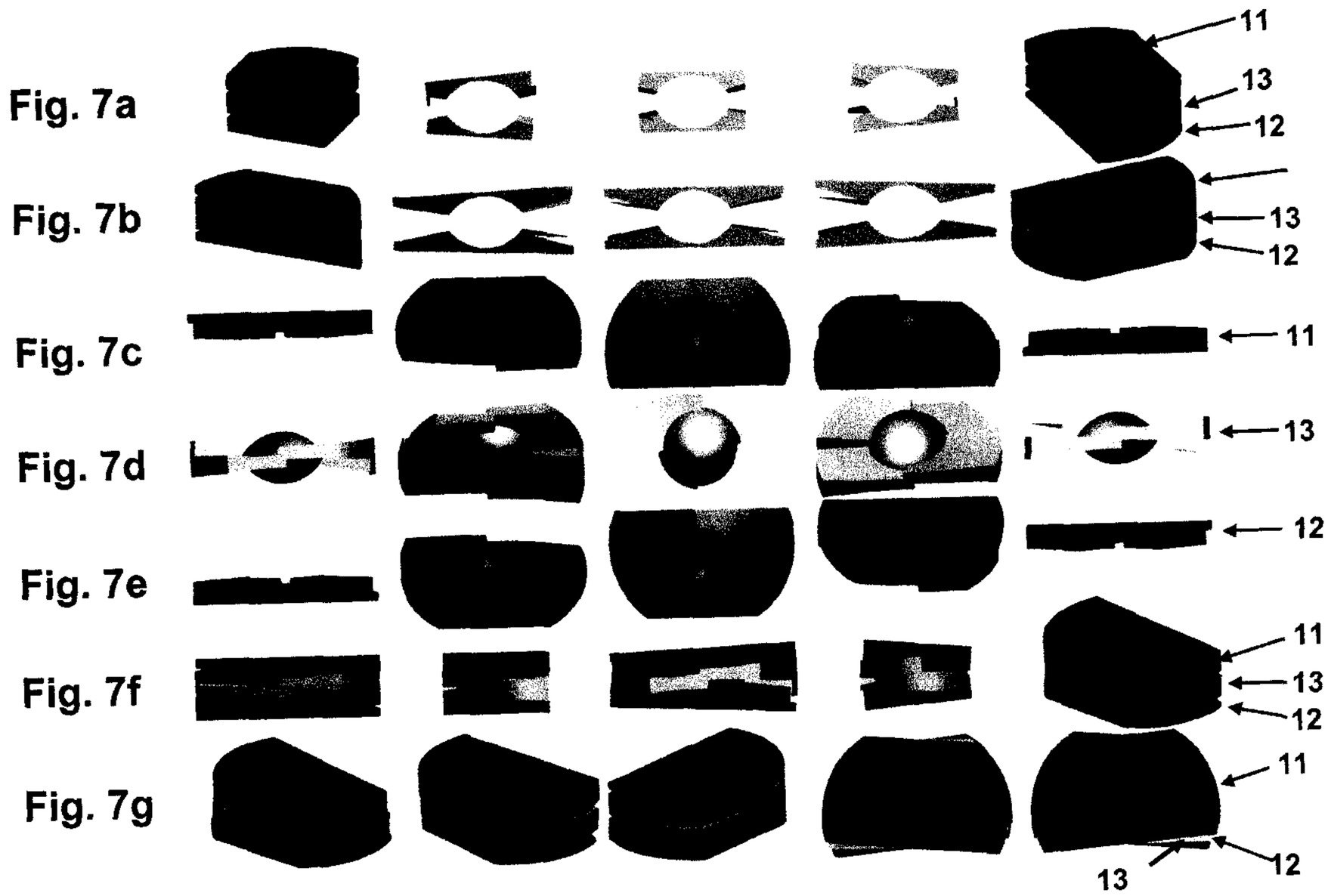
Fig. 7a
Fig. 7b
Fig. 7c
Fig. 7d
Fig. 7e
Fig. 7f
Fig. 7g
11
13
12
13
12
11
13
12
11
13
12
11
12
13

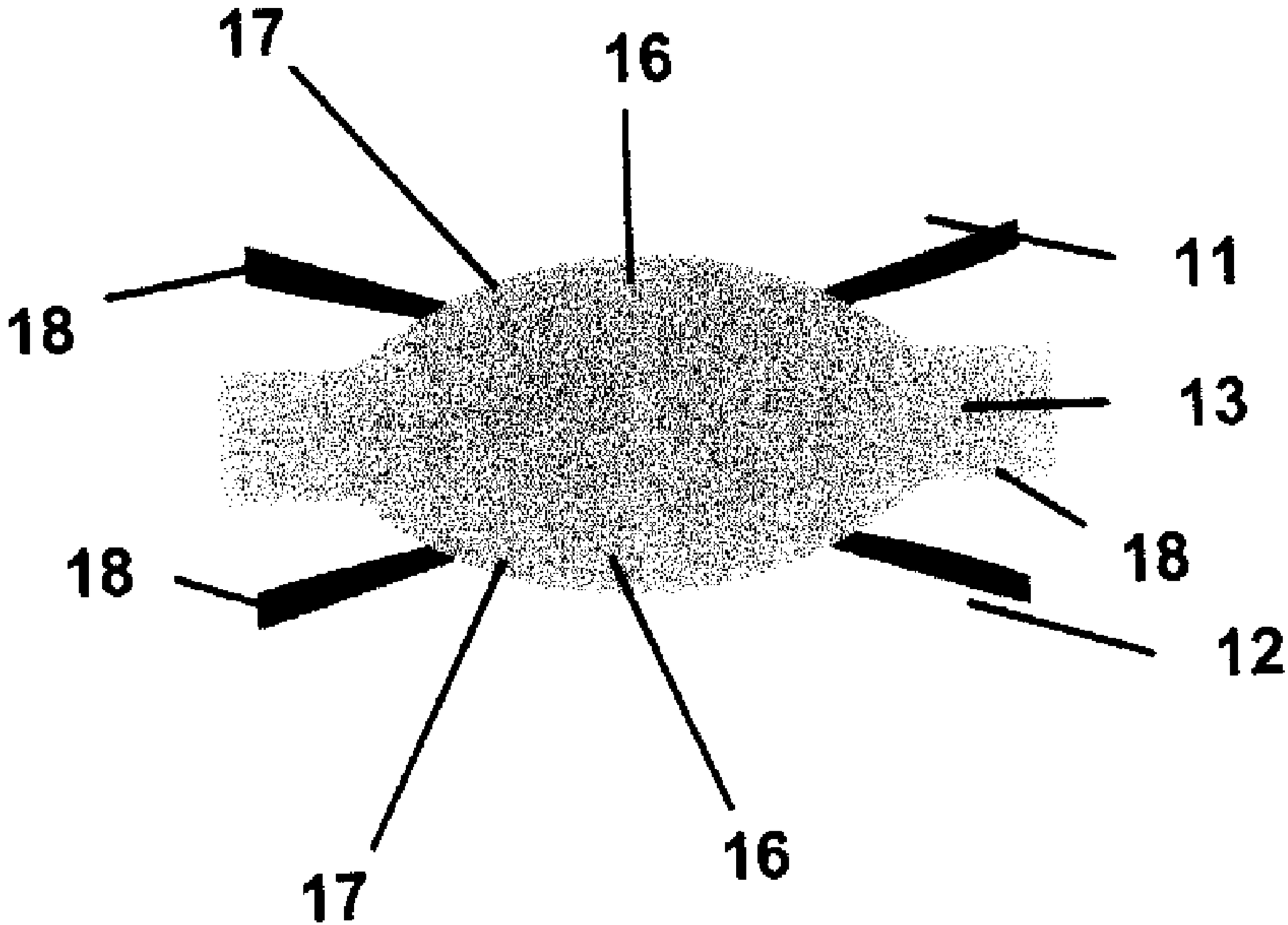
17
16
11
18
13
18
18
12
16
17