US 20230189945A1

(19) United States
(12) Patent Application Publication (10) Pub. No.: US 2023/0189945 A1
ZULUAGA ESCOBAR et al. (43) Pub. Date: Jun. 22, 2023

(54) **WEARABLE DECORATIVE ELEMENT**

(71) Applicants: **Giuseppe TROISI**, Roma (IT); **Chin CHUA**, Gelugor, Pengang (MY); **Andres Mauricio ZULUAGA ESCOBAR**, Chivasso (IT); **Gerard Martin POUBEL**, Citta di Castello (IT)

(72) Inventors: **Andres Mauricio ZULUAGA ESCOBAR**, Chivasso (IT); **Gerard Martin POUBEL**, Citta di Castello (IT)

(73) Assignees: **Giuseppe TROISI**, Roma (IT); **Chin CHUA**, Gelugor, Pengang (MY)

(21) Appl. No.: **17/923,380**

(22) PCT Filed: **May 5, 2021**

(86) PCT No.: **PCT/IB2021/053795**

§ 371 (c)(1),
(2) Date: **Nov. 4, 2022**

(30) **Foreign Application Priority Data**

May 6, 2020 (IT) 102020000010129

Publication Classification

(51) **Int. Cl.**
A44C 11/00 (2006.01)

(52) **U.S. Cl.**
CPC ***A44C 11/007*** (2013.01)

(57) **ABSTRACT**

A wearable decorative element comprising at least one ring-shaped elastic member, supporting a plurality of female elements, each of the female elements comprises a hollow body extended between a first and second through opening obtained between two opposite lateral walls for the passage and sliding of said elastic member, a plurality of hollow male elements arranged on the elastic member alternating with the female elements and adapted to allow the passage and sliding of the elastic member therein, each of the male elements fitting in a sliding manner at least partly inside one of either the first through opening or the second through opening of one of the adjacent female elements, each of the male elements comprises at least two toothed elements configured, to fit inside the hollow body to limit the mutual sliding between the female elements on the male elements at a predefined maximum distance between the adjacent female elements.

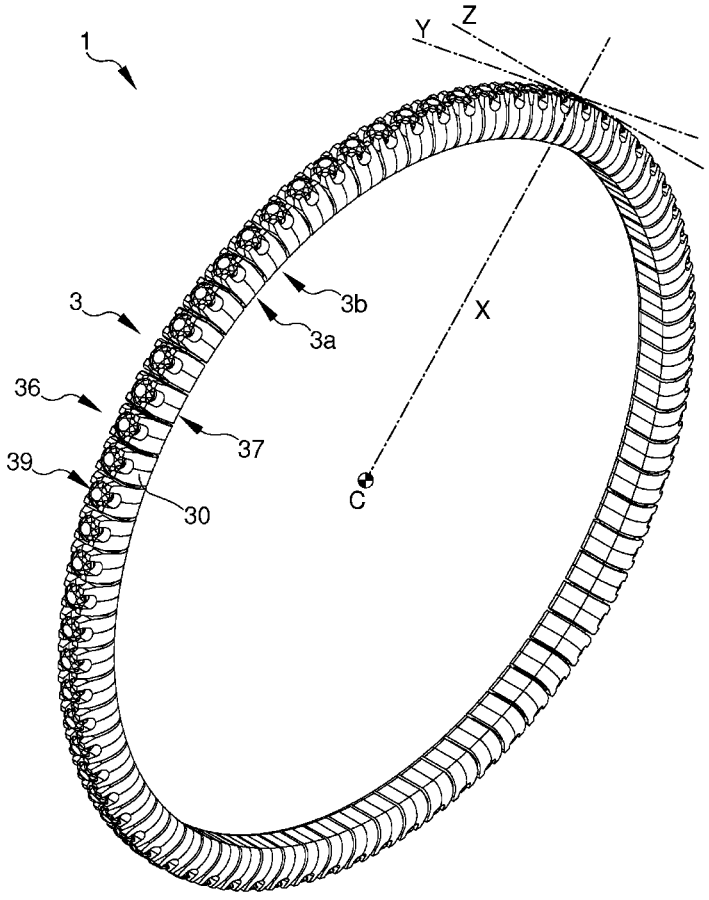

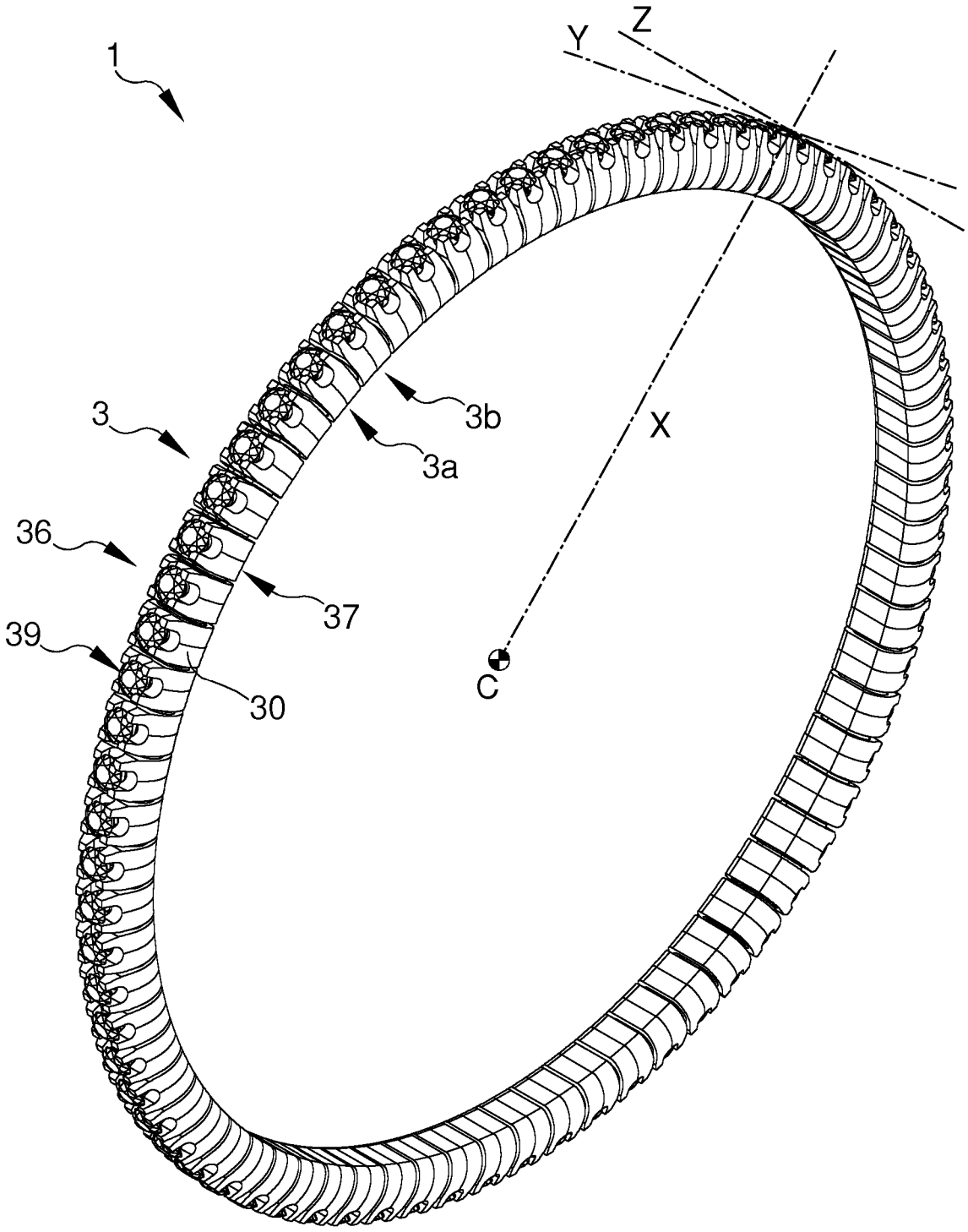

Fig.1

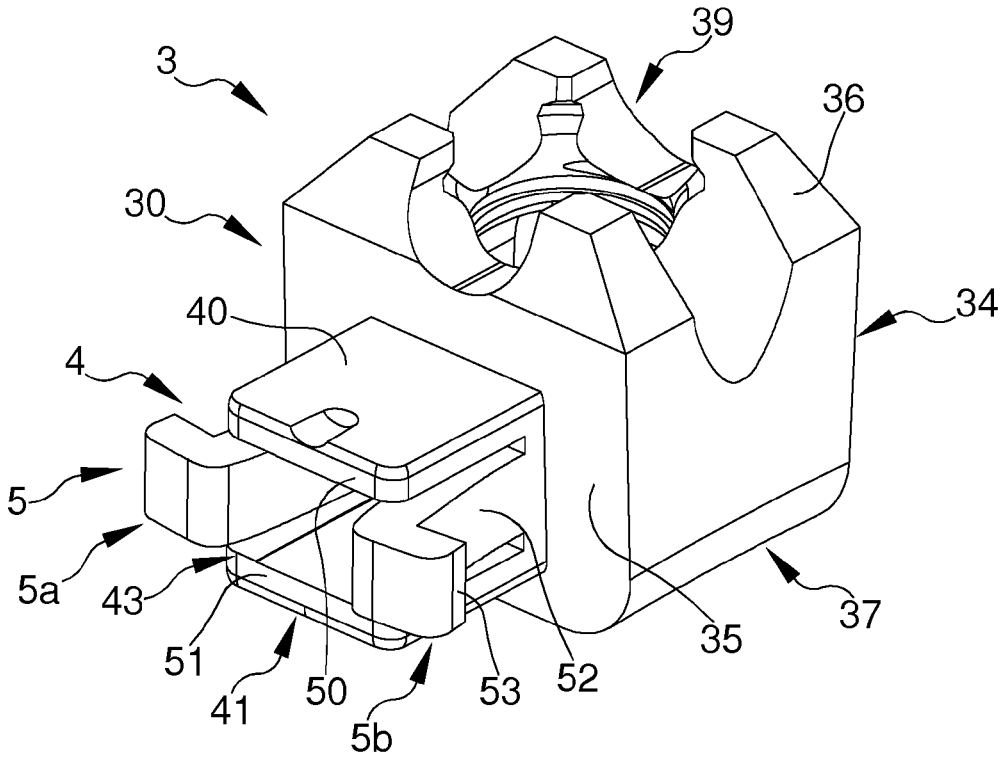
39
3
36
30
34
40
4
5
5a
43
51
41
50
5b
53
52
35
37

Fig.2

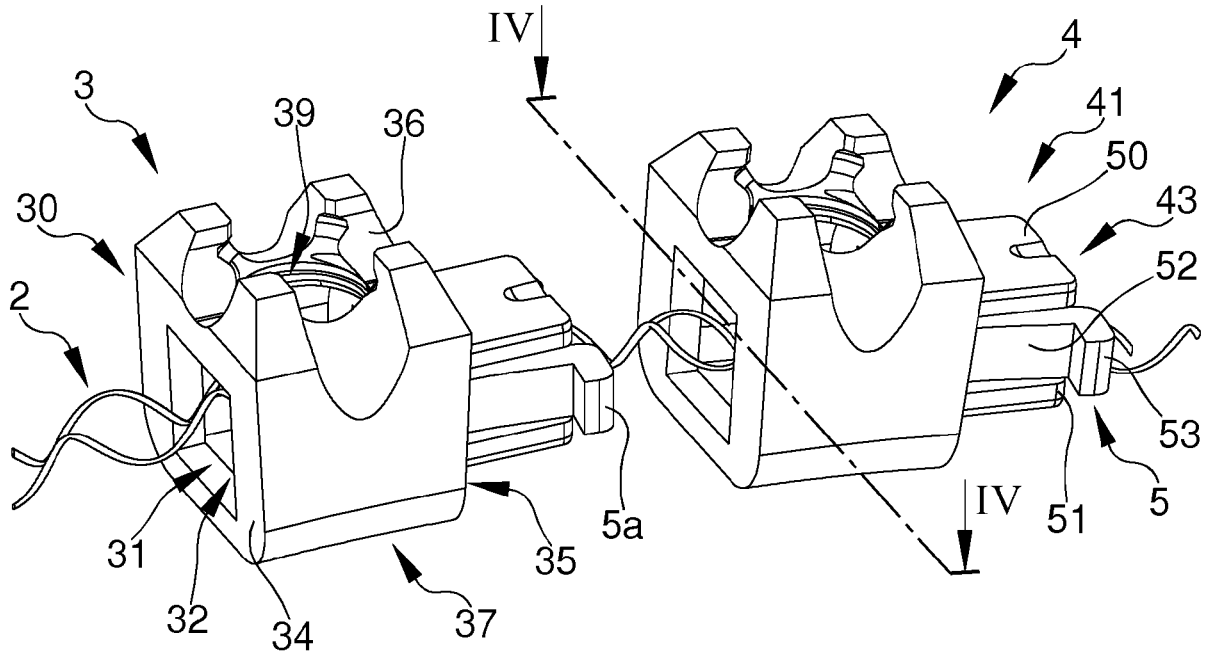
IV
4
3
41
39
36
50
30
43
52
2
53
5
IV
51
5a
31
35
32
34
37

Fig.3

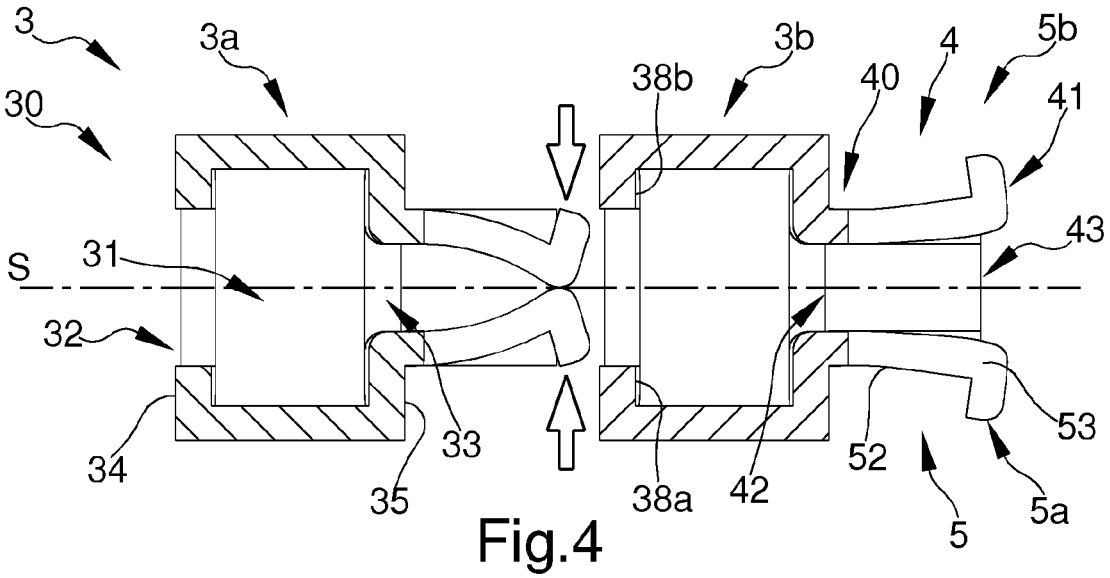

Fig.4

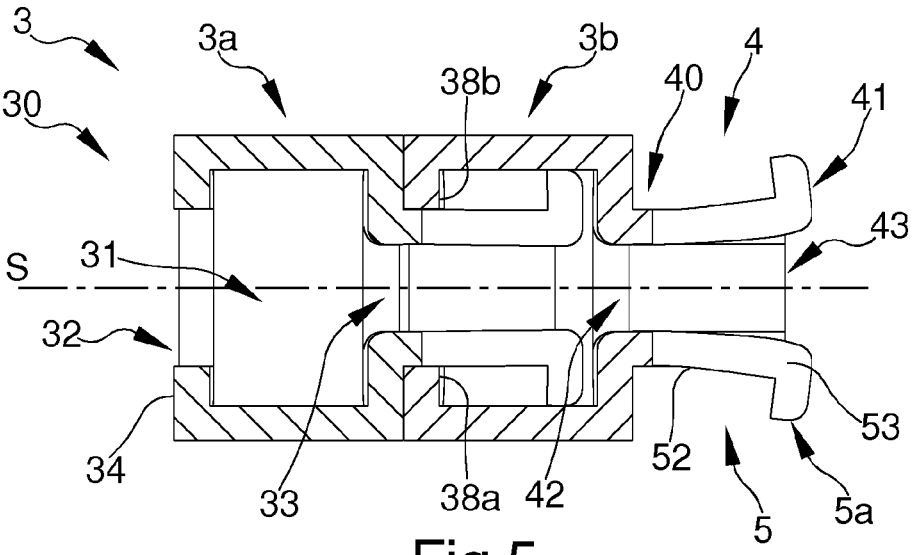

Fig.5

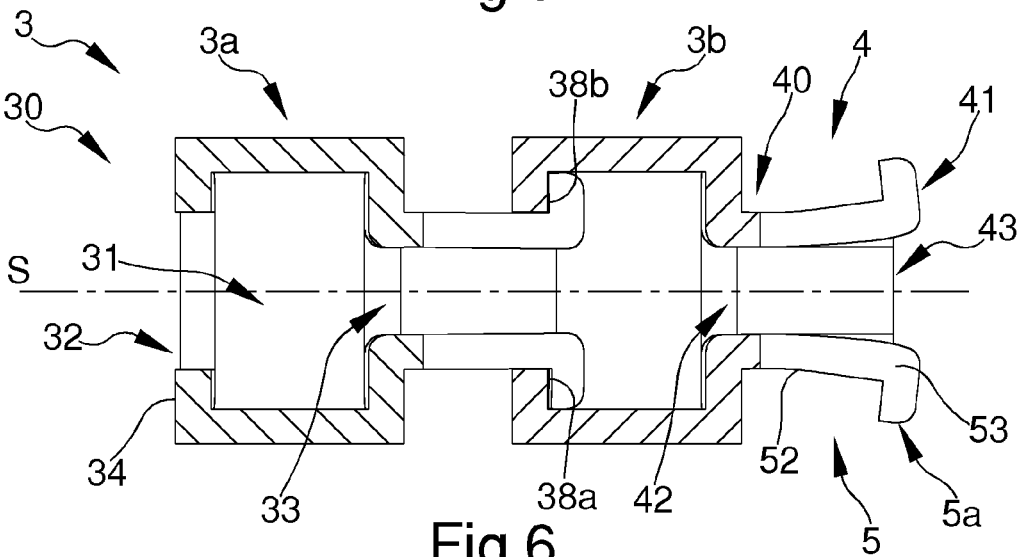

Fig.6

WEARABLE DECORATIVE ELEMENT

TECHNICAL FIELD

[0001] The present invention relates to a wearable decorative element, such as a bracelet, anklet, necklace, or other similar decorative manufactured articles.

BACKGROUND ART

[0002] With particular reference to the goldsmith and costume jewelry industry, the use is well known of bracelets characterized by high elegance and aesthetic value commonly referred to as "tennis" bracelets, generally provided with precious gemstones, such as e.g. diamonds, set by the entire length of the bracelet itself.

[0003] Out of the different types of tennis bracelets there are extensible bracelets, which are provided with a chain of bezel set stones crossed and joined by an elastic member, such as e.g. a spring, which is ring-shaped so as to allow the bracelet to be worn or removed by simply widening it.

[0004] When the bracelet is not worn, the elastic member is at least partly loaded and the bezel set stones are brought closer in contact with each other completely covering the elastic member itself by the entire length of the bracelet and preventing these from being seen from the outside. However, when the bracelet is widened to allow it to be worn, the elastic member is loaded and the bezel set stones are spaced apart from each other leaving the elastic member visible.

[0005] Additionally, even after the bracelet is worn, the elastic member may remain loaded and therefore visible, such as e.g. due to the size of the user's wrist not allowing for a snug fit.

[0006] The fact that the elastic member remains visible gives little aesthetic value to the bracelet, thus compromising the elegance thereof.

[0007] In addition, if the elastic member breaks, the bezel set stones, by slipping, slide out of it, increasing the risk of losing them.

DESCRIPTION OF THE INVENTION

[0008] The main aim of the present invention is to devise a wearable decorative element, in particular of the extensible type, capable of covering the elastic member even when the bracelet is widened, thus giving the decorative element itself high aesthetic value and increasing the elegance thereof.

[0009] Another object of the present invention is to devise a wearable decorative element that is easily assembled and has a reduced number of components with respect to known decorative elements.

[0010] Another object of the present invention is to devise a wearable decorative element that, in the event of the elastic member breaking, allows keeping the bezel set stones associated together, thus reducing the risk of the bezel set stones slipping out of the elastic member and being lost.

[0011] A further object of the present invention is to devise a wearable decorative element that allows overcoming the aforementioned drawbacks of the prior art within a simple, rational, easy, effective to use and affordable solution.

[0012] Therefore, the present invention relates to a wearable decorative element according to *claim* **1** having structural and functional characteristics such as to satisfy the aforementioned requirements while at the same time remedying the drawbacks discussed above with reference to the prior art.

BRIEF DESCRIPTION OF THE DRAWINGS

[0013] Other characteristics and advantages of the present invention will become more evident from the description of a preferred, but not exclusive, embodiment of a wearable decorative element, illustrated by way of an indicative, yet non-limiting example, in the accompanying tables of drawings wherein:

[0014] FIG. **1** is a perspective view of the decorative element according to the present invention,

[0015] FIG. **2** is a perspective view from above of the female element and of the male element of the decorative element in FIG. **1**,

[0016] FIG. **3** is a perspective view from above of a pair of separate female and male elements,

[0017] FIG. **4** is a cross-sectional view of the female and male elements in FIG. **3**,

[0018] FIGS. **5** and **6** are cross-sectional views of the female and male elements of FIG. **1** in the widened and home configurations, respectively.

EMBODIMENTS OF THE INVENTION

[0019] With particular reference to such figures, reference numeral 1 globally indicates a wearable decorative element, such as e.g. a bracelet, necklace or ring.

[0020] In the embodiment shown in the example of FIG. **1**, the decorative element **1** is preferably a bracelet, in particular a "tennis" bracelet of the extensible type; this means that the bracelet, being without openings, is susceptible to increasing its diameter through the application of an external force thereon, thus allowing it to be worn simply by widening the same, being preferably without openings.

[0021] With particular reference to the example in FIG. **1**, the bracelet **1** has a substantially circular shape having a predefined diameter to fit the wrist of a user. In the case of other types of decorative elements **1**, such as e.g. necklaces, rings, the decorative element **1** may have different shapes and sizes depending on their function.

[0022] Conveniently, the bracelet **1** comprises at least one ring-shaped elastic member **2**, supporting a plurality of female elements **3**, wherein each of the female elements **3** comprises a hollow body **30** provided with a cavity **31** and extending between a first through opening **32** and a second through opening **33** obtained between two lateral walls **34**, **35**, which are opposite each other for the passage and sliding of the elastic member **2**.

[0023] In particular, the elastic member **2** is susceptible to elastic deformation, may be e.g. a mechanical spring, an elastic material, so that the bracelet **1** may switch between a home configuration, wherein the female elements **3** are brought close together to cover the elastic member **2** which is unloaded, and a widened configuration, wherein the female elements **3** are spaced apart from each other, the elastic member **2** is loaded and the diameter of the bracelet **1** is greater than the diameter of the user's wrist. In particular, the bracelet **1** has a number of female elements **3** such that, in the home configuration, the elastic member **2** is covered by substantially the entire length of the bracelet **1**.

[0024] With particular reference to the example of FIG. **2**, the hollow body **30** of each of the female elements **3** preferably has a substantially parallelepiped shape.

[0025] In addition, the hollow body **30** comprises the first and second lateral walls **34**, **35**, which are longitudinally opposite each other, and an upper wall **36** and a lower wall **37**, which are opposite in a radial pattern and arranged in a distal and proximal position with respect to the center C of the bracelet **1**, respectively.

[0026] For simplicity's sake of the description, in the context of the present disclosure and in the subsequent claims, the term "radial" is meant to refer to the direction parallel to the radius of the bracelet **1**, i.e., the direction joining the center C of the bracelet **1** with each of the bezel set stones **4**.

[0027] Furthermore, it should be noted that the term "longitudinal" relates to the direction of development of the bracelet **1** along the length thereof, and the term "transverse" relates to the direction perpendicular to the longitudinal direction Y and radial direction X.

[0028] In addition, it should be noted that in the context of the present disclosure by the terms "height", "length" and "width" is meant the dimensions of extension of the decorative element **1** which are parallel to the radial direction X, longitudinal direction Y and transverse direction Z, respectively.

[0029] In detail, the first and the second through openings **32**, **33** are obtained longitudinally aligned on the first lateral wall **34** and on the second lateral wall **35** respectively, and in communication with the cavity **31** of the female element **3** for the passage and sliding of the elastic member **2**.

[0030] Preferably, the through openings **32**, **33** have a substantially rectangular shape, but the possibility of through openings **32**, **33** with different shapes, such as e.g. oval or elliptical, cannot be ruled out.

[0031] In detail, the first through opening **32** has smaller dimensions (height and width) than the height and width of the cavity **31** of the female element **3** so that the first through opening **32** has at least two abutment surfaces **38***a*, **38***b* facing the cavity **31**.

[0032] Conveniently, the second through opening **33** of the female element has smaller dimensions than the dimensions of the first through opening **32**; the technical effect of this feature will be discussed further on in the remainder of the present disclosure.

[0033] Conveniently, each female element **3** is provided with a setting seat **39** for setting at least one gemstone, preferably obtained on the upper wall **36** of the hollow body **30**.

[0034] Preferably, the female element **3** is made of metallic material, in particular precious metals such as e.g. gold, silver, platinum and palladium. Advantageously, the bracelet **1** comprises a plurality of hollow male elements **4** arranged on the elastic member **2** alternating with the female elements **3** and adapted to allow the passage and sliding of the elastic member **2** therein.

[0035] Each male element **4** fits in a sliding manner, along a direction of insertion S, and at least partly inside one of either the first through opening **32** or the second through opening **33** of one of the adjacent female elements **3**.

[0036] As shown in FIGS. **2** and **3**, preferably, each male element **4** has a substantially tubular shape and extends between a first and a second terminal portions **40**, **41** wherein a first and a second openings **42**, **43** are obtained communicating with each other for the passage and sliding of the elastic member **2**.

[0037] In detail, each male element **4** is comprised between a first female element **3***a* and a second female element **3***b*, the first and the second portions **40**, **41** of the male element **4** being adjacent to the first female element **3***a* and to the second female element **3***b*, respectively.

[0038] Advantageously, the first terminal portion **40** of the male element **4** is associated with the second opening **33** of the first female element **3***a* and the second terminal portion **41** of the male element **4** is associated in a sliding manner with the first opening **32** of the second female element **3***b* so that at least the second female element **3** can slide at least partly over the male element **4** to vary the mutual distance between the female elements **3**.

[0039] For this purpose, the male element **4** is shaped so as to be housed in the cavity **31** of the second female element **3***b*.

[0040] In detail, the male element **4**, in cross-section, has a shape substantially complementary to the shape of the first through opening **32** of the second female element **3***b* so that the second terminal portion **41** can be inserted through the first through opening **32** to make a prismatic coupling wherein at least the second female element **3***b* can slide the male element **4** away from/close to the first female element **3***a*. Preferably, in cross-section, the male element **4** has a substantially rectangular shape, which is complementary to the shape of the first through opening **32**. This conformation makes it possible to avoid the mutual rotation between the second female element **3***b* and the male element **4**.

[0041] In this way, the setting seat **39** is always facing upwards, i.e. visible for the user. The possibility cannot however be ruled out that the male element **4** has, in cross section, different shapes, such as e.g. circular.

[0042] Conveniently, the width and height of the male element **4** are substantially coincident, with the width and height of the first through opening **32** of the female element **3** and, at the same time, the width and height of the male element **4** are substantially greater than the dimensions of the second through opening **33** of the second female element **3***b*.

[0043] In this way, the male element **4** can be inserted into the cavity **31** of the second female element **3***b* by means of the first through opening **32** of the latter and, when the female element **3***b* slides over the male element **4**, the latter abuts against the second lateral wall **35**, thus limiting the sliding of the second female element **3***b* close to the first female element **3***a*.

[0044] Conveniently, the length of the male element **4** is substantially corresponding to the length of the cavity **31** of the second female element **3** so that, when the male element **4** clamps in abutment the sliding of the second female element **3***b*, the latter is close to the first female element **3***a* covering the male element **4**. In this way, in the home configuration, the female elements **3** are moved close to each other covering substantially entirely the male element **4**.

[0045] Conveniently, the maximum mutual distance between the female elements **3** is substantially corresponding to the length of the male element **4**. In this way, in the widened configuration, the female elements **3** are spaced apart from each other and leave the male element **4** partly visible so that the elastic member **2** still remains covered both in the home and in the widened configurations.

[0046] In the embodiment shown in FIG. **2**, the first terminal portion **40** of the male element **4** is locked together with the first female element **3***a* so that the second through open-

ing **33** of the first female element **3***a* and the first opening **42** of the male element **4** are in communication together to receive the elastic member **2**.

[0047] Preferably, the first female element **3***a* and the male element **4** are made in a single monolithic body wherein the male element **4** is projecting with respect to the female element **3** and configured to fit into one of the adjacent female elements **3**.

[0048] According to the invention, each of the male elements **4** comprises at least two toothed elements **5** configured, in use, to be inserted internally to the hollow body **30** in order to limit the mutual sliding between the female elements **3** on the male elements **4** at a predefined maximum distance between the adjacent female elements **3**. In particular, the two toothed elements **5**, in use, are housed in the cavity **31** of the second female element **3***b* constraining the latter to the male element **4**.

[0049] In this way, the toothed elements **5** limit the sliding of the second female element **3***b* over the male element **4** at a predefined maximum distance from the first female element **3***a* wherein the male element **4** is partly housed in the cavity **31** of the second female element **3***b* and the toothed elements **5** abut against the first lateral wall **34**.

[0050] Preferably, the toothed elements **5** may be made of a material selected from the list comprising gold, silver, steel, bronze, and nickel silver. Alternatively, the toothed elements **5** are made of steel.

[0051] Conveniently, the male element **4** comprises two abutment elements **50**, **51** configured to fit sliding to size in one of either the first opening **32** or the second opening **33** of the female element **3**. Preferably, the two abutment elements **50**, **51** are fitted to size in the first opening **32** of the second female element **3***b*.

[0052] Since the dimensions of the second opening **33** of the female element **3** are smaller than the dimensions of the first opening **32**, the male element **4** may fit sliding as far as the abutment elements **50**, **51** abut against the second lateral wall **35** by clamping the male element **4** internally to the hollow body **30**.

[0053] In detail, the two abutment elements **50**, **51** operate in conjunction with the toothed elements **5** so that the male element **4** remains at least partly housed internally to the female element **3** both in the home configuration and in the widened configuration, while keeping the elastic member **2** substantially covered.

[0054] Preferably, as shown in FIG. **3**, the abutment elements **50**, **51** have a substantially slab-like shape and are arranged parallel to each other, in a distal and proximal position to the center of the bracelet **1**, respectively. Advantageously, the abutment elements **50**, **51** are adapted to allow protecting the elastic member **2** so as to allow the protection thereof from external shocks. In particular, the toothed elements **5** are positioned between the abutment elements **50**, **51**.

[0055] In detail, each of the toothed elements **5** is substantially L-shaped.

[0056] The toothed elements **5** are arranged opposite each other transversely so that the male element **4** has a substantially "T" shape as a whole.

[0057] Advantageously, each toothed element **5** comprises a first longitudinal portion **52** associated with the second opening **33** and a second transverse portion **53** associated orthogonally with the first portion **52** and projecting cantilevered from the latter.

[0058] Preferably, the first portion **52** of each toothed element **5** is locked together with the second lateral wall **35** of the first female element **3** and is arranged parallel to the longitudinal direction Y. In particular, the first portions **52** of the toothed elements **5** are positioned between the abutment elements **50**, **51** and transversely opposite each other.

[0059] Different conformations of the toothed elements **5** and of the abutment elements **50**, **51** cannot however be ruled, e.g. wherein the abutment elements **50**, **51** are arranged transversely opposite each other and the toothed elements **5** are arranged opposite each other in a radial pattern.

[0060] Conveniently, the toothed elements **5** are movable between:

[0061] an insertion configuration wherein the toothed elements **5** are approached to each other to allow the insertion thereof into the hollow body **30** through the first opening **32**; and

[0062] a clamping configuration wherein the toothed elements **5** are moved away from each other and abut against the internal walls of the hollow body **30** by clamping there.

[0063] For this purpose, the first portion **52** of each toothed element **5** is rotatable around an axis of rotation substantially perpendicular to the abutment elements **50**, **51** so that, by applying a force convergent with respect to the direction of insertion S to the toothed elements **5**, the latter may rotate close to each other in order to insert the second terminal portion **41** of the male element **4** internally to the hollow body **50**.

[0064] Subsequently, the toothed elements **5** are moved away from each other by applying a divergent force to the latter, so that they can abut against the inner walls of the hollow body **30**, thus constraining the male element **4** to the female element **3**. The divergent force may be applied, for example, by means of a pivot element, preferably made of steel. The pivot element may be fitted between the toothed elements **5** so that, by interposing between the latter, the divergent force may be applied to arrange the toothed elements **5** in a clamping configuration. Finally, when the toothed elements **5** are arranged in a clamping configuration, the latter are welded in order to prevent undesirable displacements, for example due to strong tensions, which could damage the elastic member **2**.

[0065] In other words, by applying an external convergent force on the abutment elements **50**, **51**, the latter converge towards the direction of insertion S allowing these to be inserted internally to the hollow body **30**, in parallel, by applying a divergent force, the abutment elements **50**, **51** diverge with respect to the direction of insertion S allowing these to be clamped inside the cavity **31**.

[0066] This means that the moving away of the abutment elements **50**, **51** results in the toothed elements **5** abutting against the abutment surfaces **38***a*, **38***b* in the clamping configuration.

[0067] Preferably, the abutment surfaces **38***a*, **38***b* are arranged opposite each other transversely so that, in the clamping configuration, each of the second transverse portions **53** abuts against one of the abutment surfaces **38***a*, **38***b* respectively, the first longitudinal portions **52** being divergent with respect to the direction of insertion S.

[0068] Advantageously, in the clamping configuration, the toothed elements **5** have a maximum mutual distance which is bigger than the distance between the abutment surfaces

38*a*, **38***b*. Thus, in use, the toothed elements **5**, by abutting against the abutment surfaces **38***a*, **38***b*, clamp the male element **4** internally to the hollow body **30** of the female element **3**, in this case inside the cavity **31**.

[0069] In detail, as can be observed in FIG. **4**, in the insertion configuration, the maximum mutual distance between the toothed elements **5** is less than the distance between the abutment surfaces **38***a*, **38***b* of the first opening **32** so that the male element **4** may be inserted into the hollow body **30** of the female element **3**, that is, inside the cavity **31**.

[0070] Furthermore, as can be observed in FIG. **5**, in the clamping configuration, the maximum mutual distance between the toothed elements **5** is bigger than the distance between the abutment surfaces **38***a*, **38***b*.

[0071] In summary, after each male element **4** has been associated with the adjacent female elements **3**, the bracelet **1** may be moved between the home configuration, wherein, as observable in FIG. **5**, the abutment portions **50**, **51** abut internally against the second lateral wall **35** of the second female element **3***b*, and the widened configuration, wherein, as observable in FIG. **6**, the second portion **53** of the toothed elements **5** abuts against the abutment surfaces **38***a*, **38***b* of the first through opening **32** of the second female element **3***b*.

[0072] It has in practice been ascertained that the described invention achieves the intended objects, and in particular, the fact is emphasized that the female elements and the male elements of the decorative element are able to cover the elastic member both in the home and in the widened configurations to give the decorative element high aesthetic value and elegance.

[0073] In addition, the synergic combination of the presence of a male element provided with two toothed elements alternated with a female element allows them to be mutually clamped to each other, thus preventing their release even in case of breakage of the elastic member.

1) A wearable decorative element comprising:

at least one ring-shaped elastic member, supporting a plurality of female elements, wherein each of said female elements comprises a hollow body extended between a first and a second through opening obtained between two opposite lateral walls for the passage and sliding of said elastic member,

a plurality of hollow male elements arranged on said elastic member alternating with said female elements and adapted to allow the passage and sliding of said elastic member therein, each of said male elements fitting in a sliding manner at least partly inside one of either said first through opening or said second through opening of one of said adjacent female elements, wherein

each of said male elements comprises at least two toothed elements configured, in use, to fit inside said hollow body to limit the mutual sliding between said female elements on said male elements at a predefined maximum distance between said adjacent female elements.

2) A decorative element according to claim **1**, wherein each of said male elements extends between a first and a second terminal portion wherein are obtained a first and a second opening communicating with each other for the passage and sliding of said elastic member, each of said male elements being comprised between a first and a second female element.

3) The wearable decorative element according to claim **1**, wherein said first terminal portion of said male element is associated with said second through opening of said first female element and said second terminal portion of said male element is associated in a sliding manner with said first through opening of said second female element so that at least said second female element can slide at least partly said male element to vary the mutual distance between said female elements.

4) The wearable decorative element according to claim **1**, wherein said male element comprises two abutment elements configured to fit sliding to size in one of either said first through opening or said second through opening.

5) A decorative element according to claim **4**, wherein said toothed elements are interposed between said abutment elements.

6) A decorative element according to claim **1**, wherein each of said toothed elements comprises a first longitudinal portion associated with said second through opening and a second transverse portion associated orthogonally with said first portion and protruding cantilevered from the latter.

7) The decorative element according to claim **6**, wherein said toothed elements are movable between:

an insertion configuration wherein said toothed elements are approached to each other to allow the insertion thereof into said hollow body through said first through opening along a direction of insertion ; and

a clamping configuration wherein said toothed elements are moved away from each other and abut against the internal walls of said hollow body by clamping there.

8) The decorative element according to claim **7**, wherein said first through opening comprises two opposite abutment surfaces which are obtained internally to said hollow body, in said clamping configuration said toothed elements abutting respectively against said abutment surfaces.

9) The decorative element according to claim **8**, wherein, in said clamping configuration, each of said second transverse portions abuts against one of said abutment surfaces respectively, said first longitudinal portions being divergent with respect to said direction of insertion.

10) A decorative element according to claim **1**, wherein each of said toothed elements is substantially L-shaped.

11) Th edecorative element according to claim **8**, wherein, in said clamping configuration, said toothed elements have a maximum mutual distance which is bigger than the distance between said abutment surfaces.

12) The decorativeelement claim **8**, according to

in said insertion configuration the maximum mutual distance between said toothed elements is less than the distance between said abutment surfaces of said first through opening ; and

in said clamping configuration, the maximum mutual distance between said toothed elements is bigger than the distance between said abutment surfaces.

13) The decorativeelement claim **2**, according to wherein said maximum mutual distance between said female elements is substantially corresponding to the length of said male element.

14) A decorative element claim **1**, according to wherein said female element has at least one setting seat for setting at least one gem.

15) The decorative element according to claim **2**, wherein said first terminal portion of said male element is locked together with said second female element.

16) The decorative element claim **2**, according to wherein said first female element and said male element are made in a

single monolithic body wherein said male element is projecting with respect to said first female element and configured to fit into one of said adjacent female elements.

* * * * *