United States Patent

Hottendorf

[15] **3,648,605**

[45] **Mar. 14, 1972**

[54] BOX MAKING MACHINE

[72] Inventor: **William J. Hottendorf,** 905 Kifer Road, Sunnyvale, Calif. 94086

[22] Filed: **Mar. 29, 1971**

[21] Appl. No.: **129,155**

Related U.S. Application Data

[63] Continuation of Ser. No. 627,041, Mar. 30, 1967, abandoned.

[52] **U.S. Cl.** **101/232,** 93/49, 101/183, 271/74

[51] **Int. Cl.** **B65h 3/12,** B41f 5/02

[58] **Field of Search** 101/183, 184, 224–228, 101/231, 232; 271/74; 226/95; 93/49

[56] **References Cited**

UNITED STATES PATENTS

401,790	4/1889	Osborne	101/138
1,505,398	8/1924	McEachron	101/232
1,724,077	8/1929	Fleischer et al.	271/74
1,962,253	6/1934	McMaster	101/232
2,359,825	10/1944	Campbell	101/416 X
2,975,706	3/1961	Moser et al.	101/181

Primary Examiner—J. Reed Fisher

[57] **ABSTRACT**

Apparatus for moving paperboard boxes continuously along a path while performing the following operations on the box blanks: feeding, printing, creasing, slotting, trimming, taping, folding, and delivering. The apparatus may be adjusted for handling box blanks of different lengths and widths. Vacuum support means for the box blanks are provided in the feeding, printing and folding sections. The feeder may be operated to deliver box blanks to the path either continuously or periodically.

3 Claims, 20 Drawing Figures

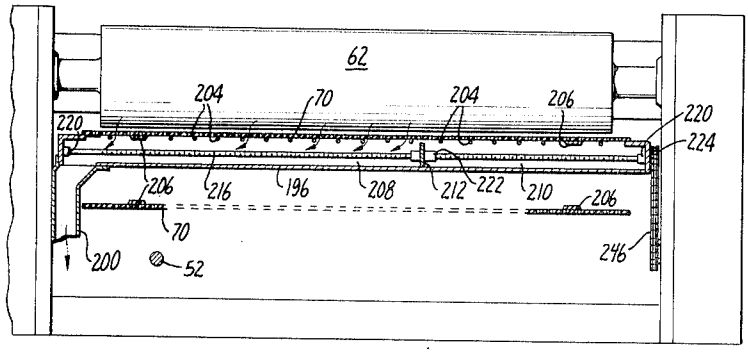

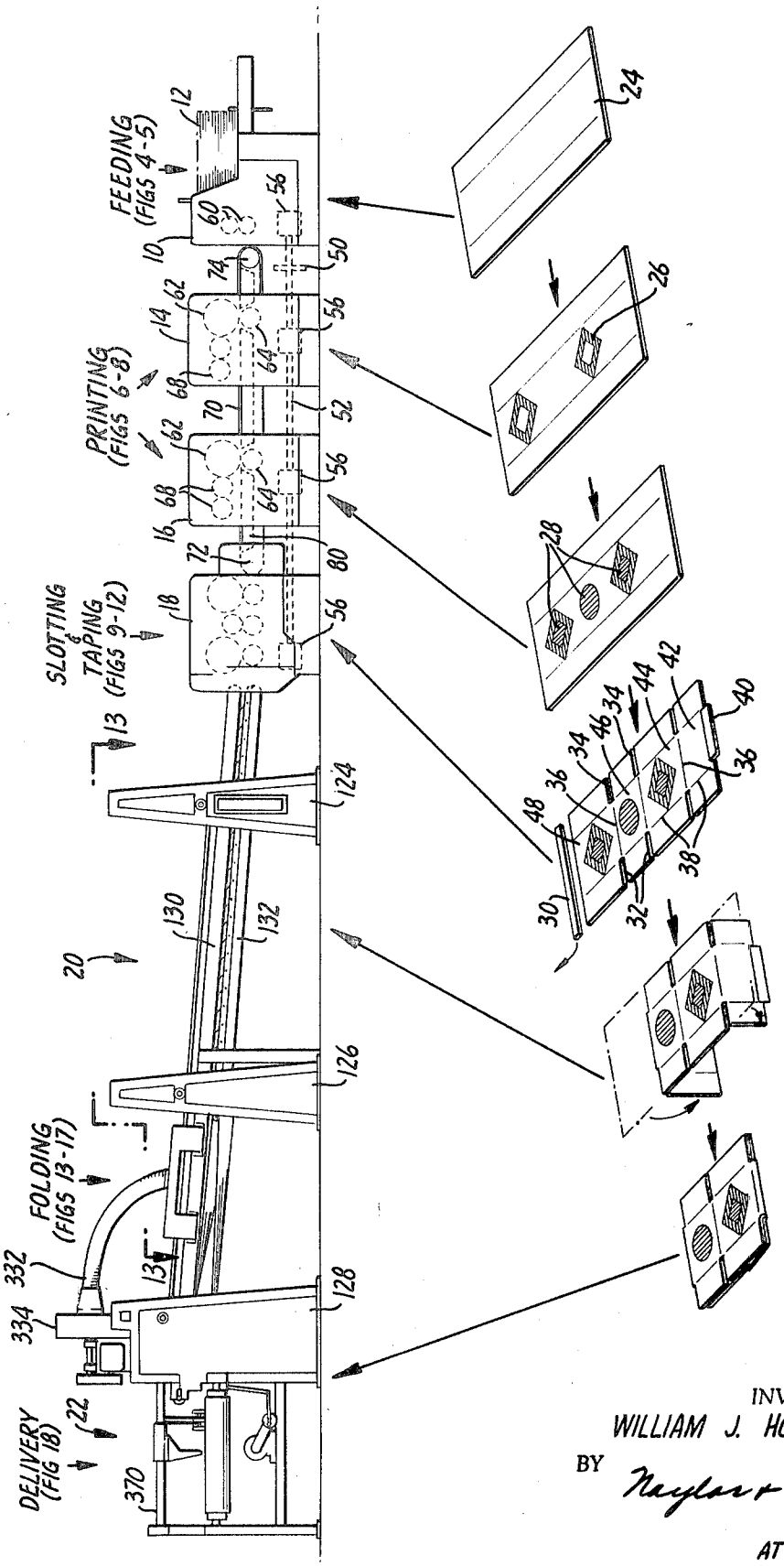

FIG. 1.

INVENTOR.
WILLIAM J. HOTTENDORF
BY Naylor & Neal
ATTORNEYS

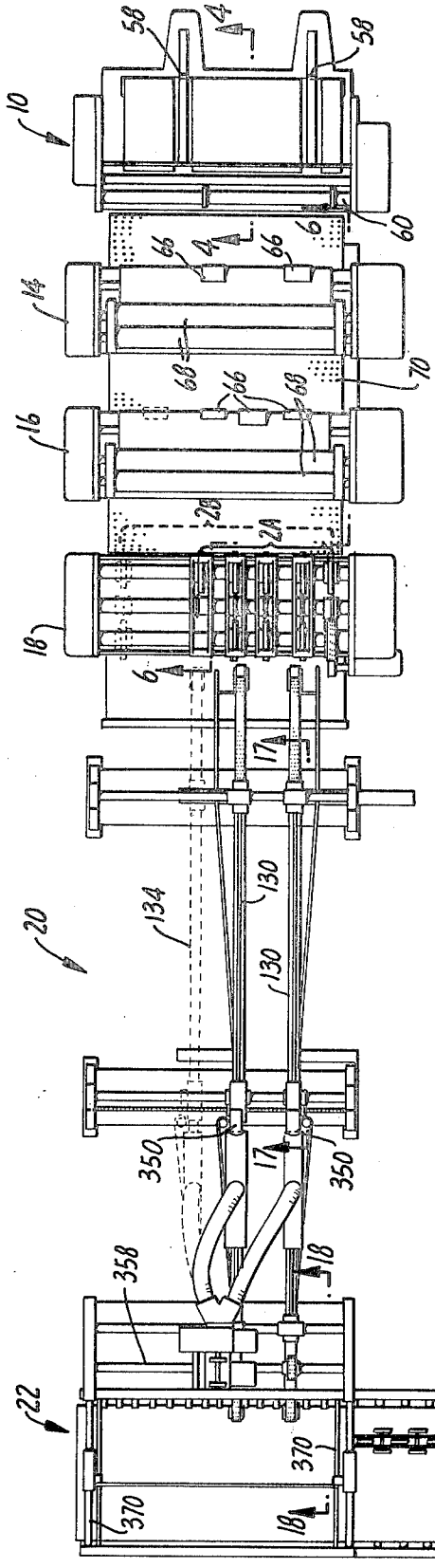

FIG. 2.

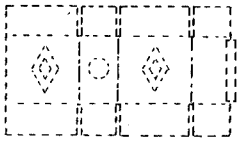

FIG. 2B.

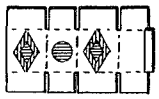

FIG. 2A.

INVENTOR.
WILLIAM J. HOTTENDORF
BY Naylor & Neal
ATTORNEYS

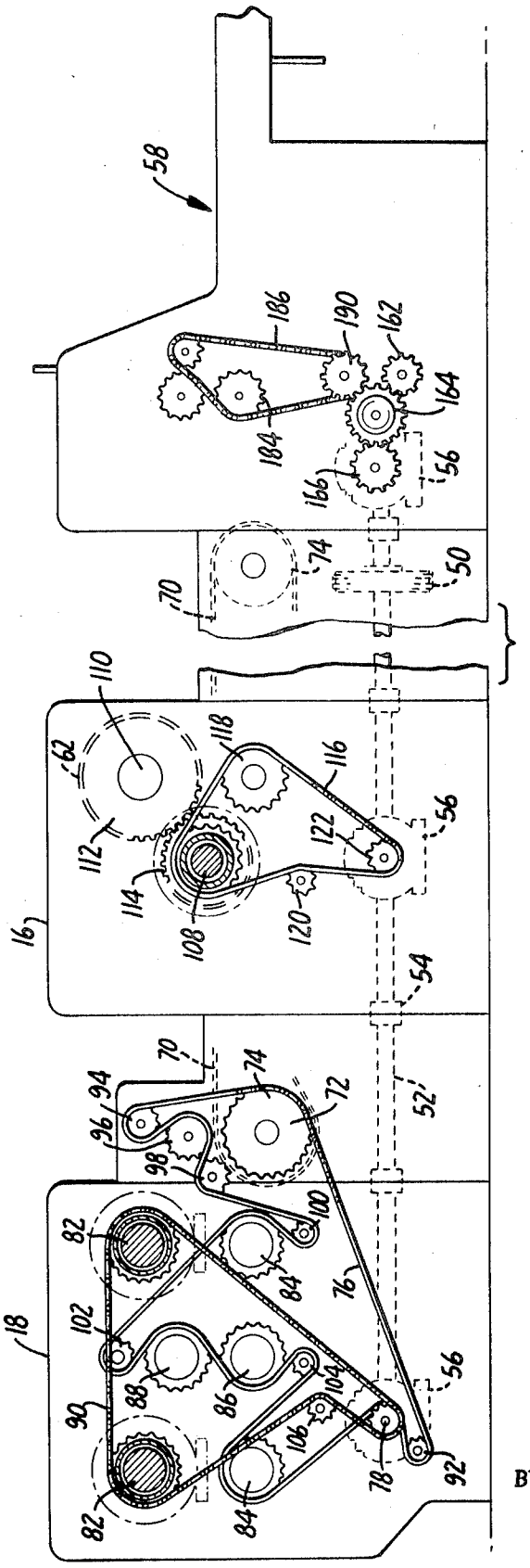

FIG. 3.

INVENTOR.
WILLIAM J. HOTTENDORF
BY Naylor & Neal
ATTORNEYS

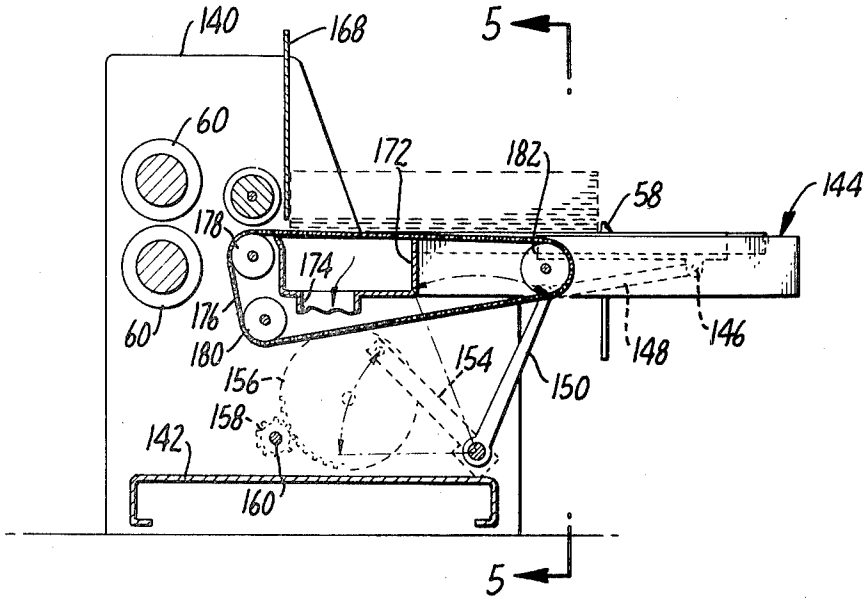

FIG. 4.

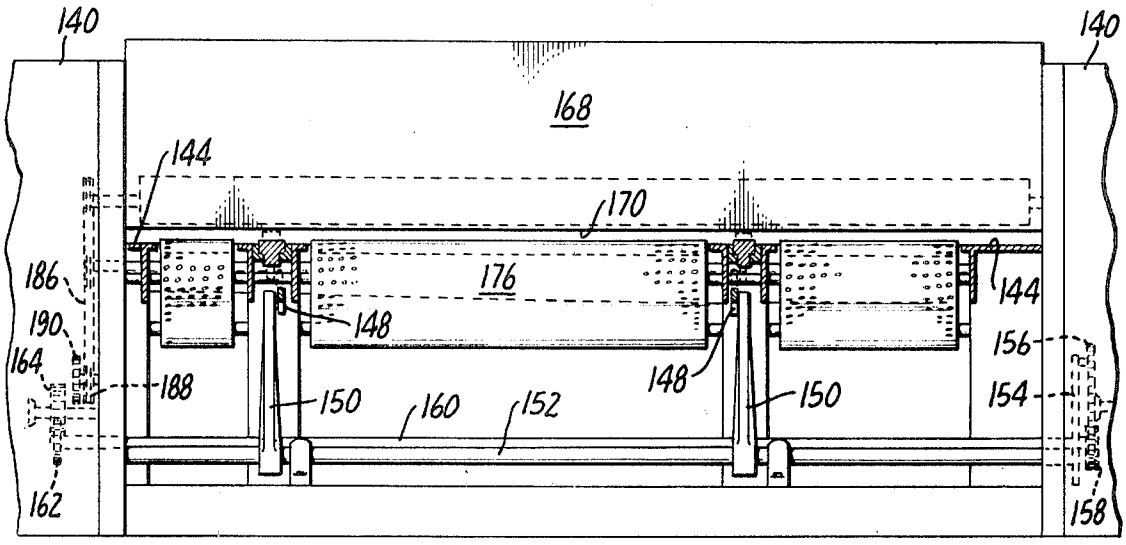

FIG. 5.

INVENTOR.
WILLIAM J. HOTTENDORF
BY Naylor & Neal
ATTORNEYS

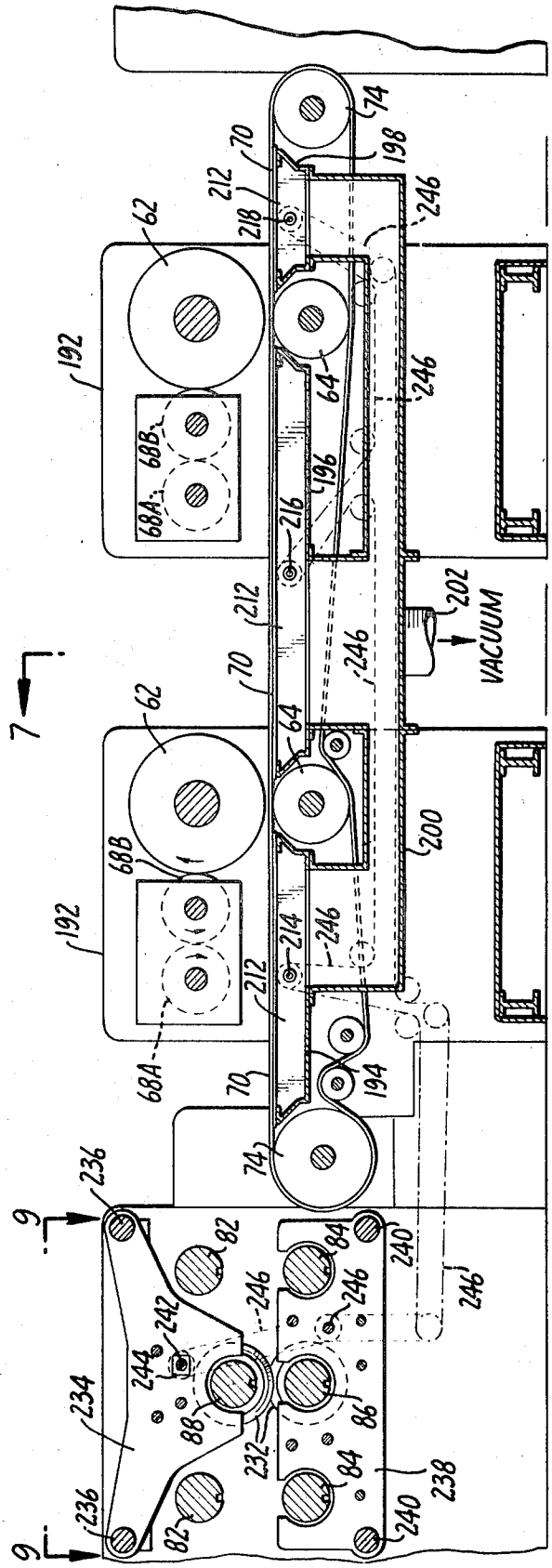

FIG. 6.

INVENTOR.
WILLIAM J. HOTTENDORF
BY
Naylor & Neal
ATTORNEYS

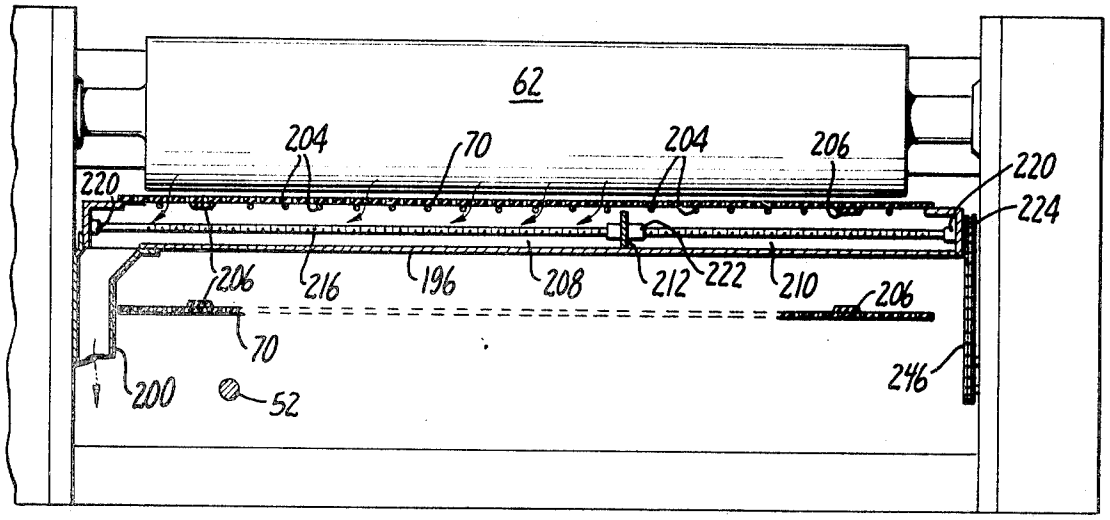

FIG. 7.

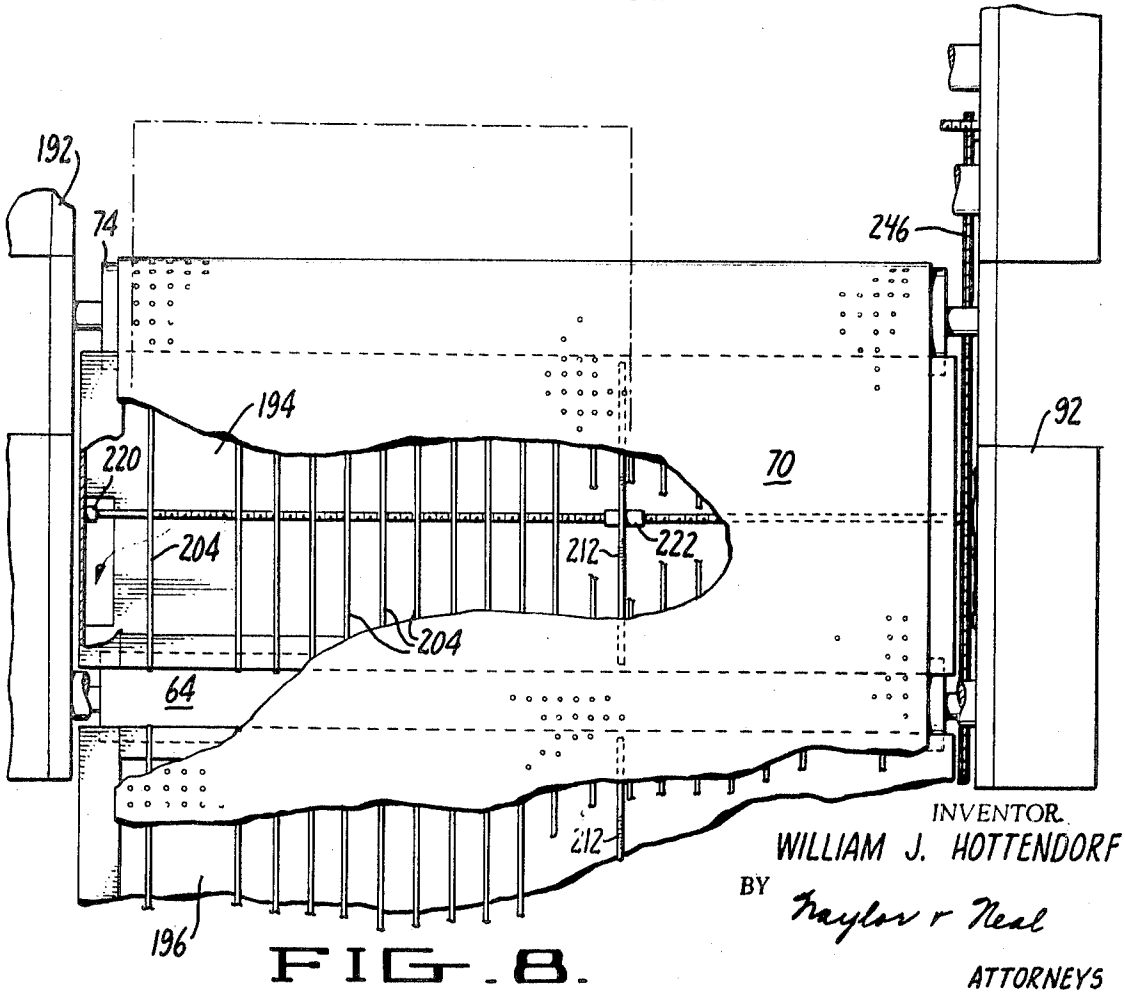

FIG. 8.

INVENTOR.
WILLIAM J. HOTTENDORF
BY Taylor & Neal
ATTORNEYS

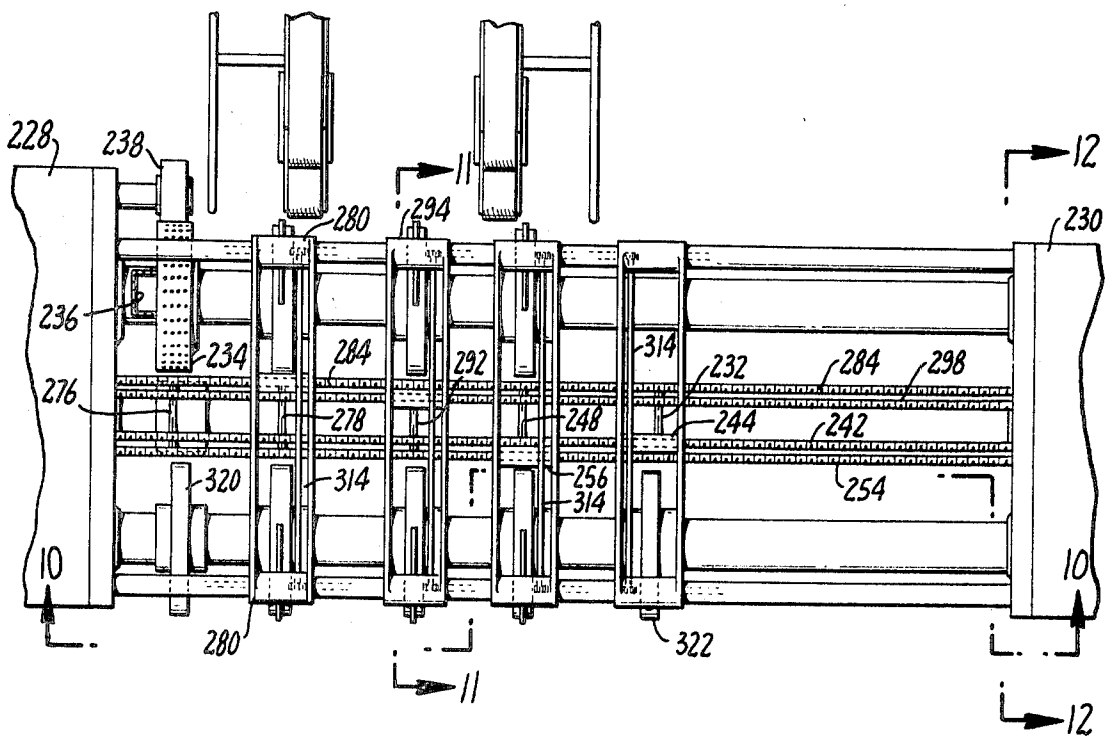

FIG. 9.

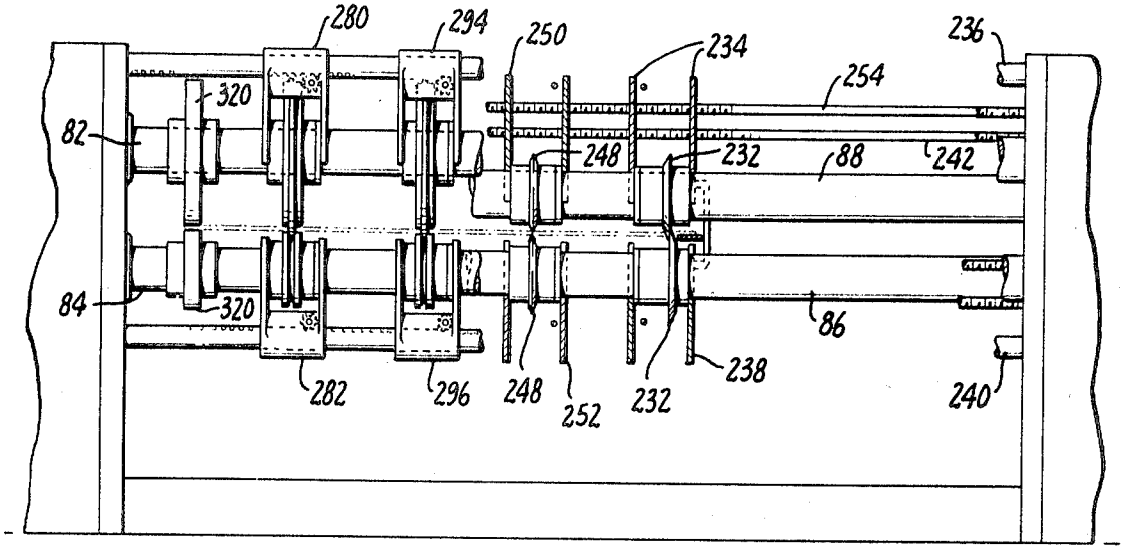

FIG. 10.

INVENTOR.
WILLIAM J. HOTTENDORF
BY
Naylor & Neal
ATTORNEYS

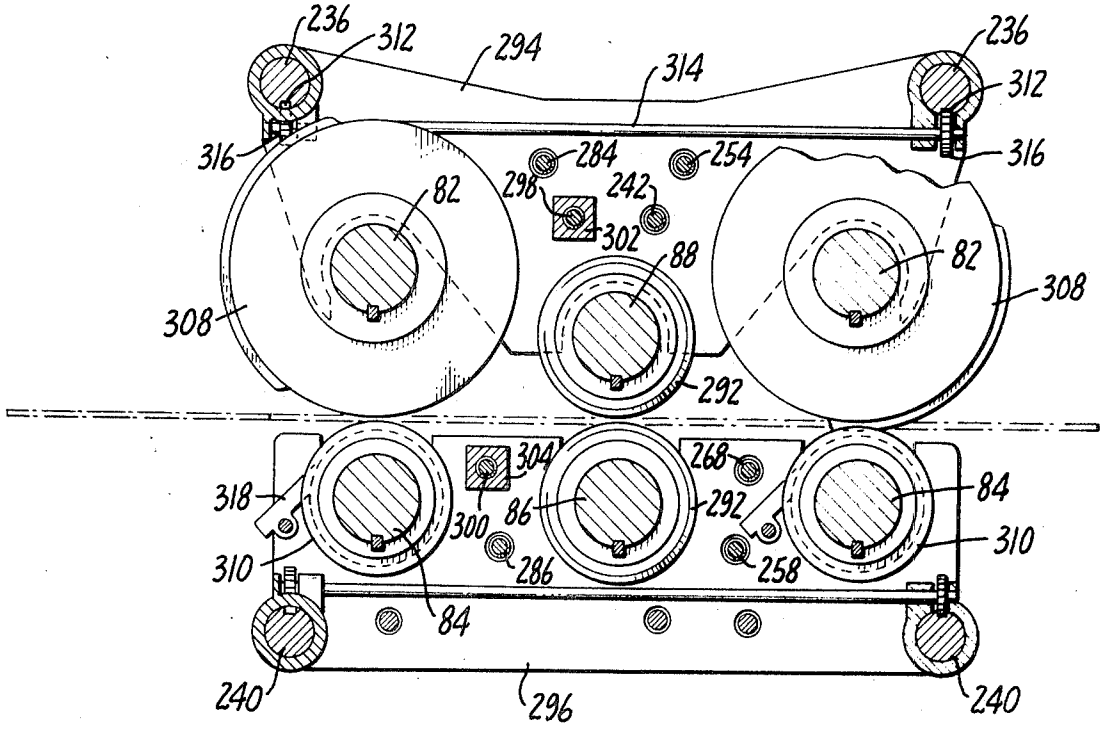

FIG. 11.

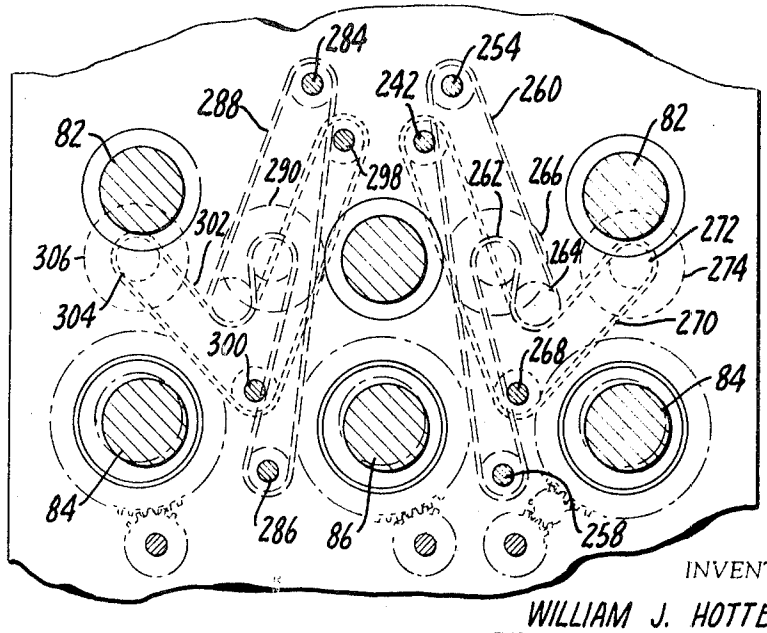

FIG. 12.

INVENTOR.
WILLIAM J. HOTTENDORF
BY
Taylor & Neal
ATTORNEYS

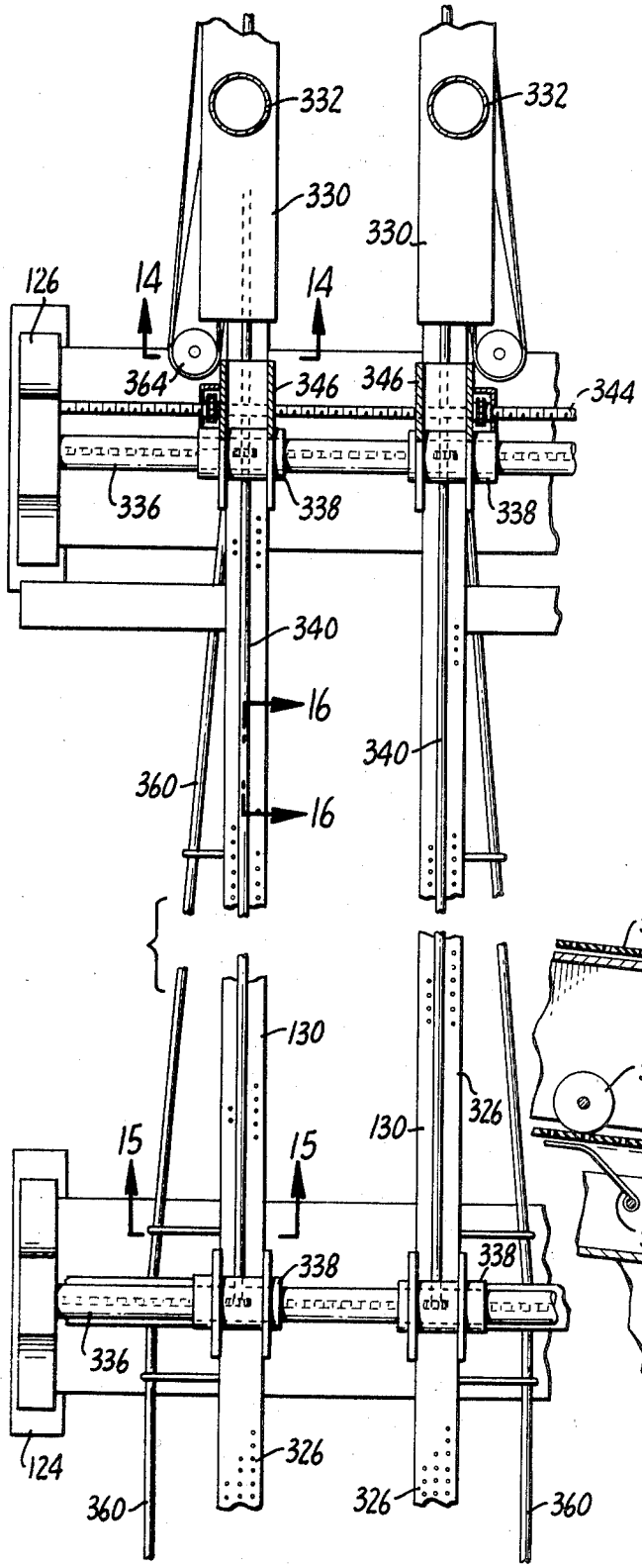

FIG. 13.

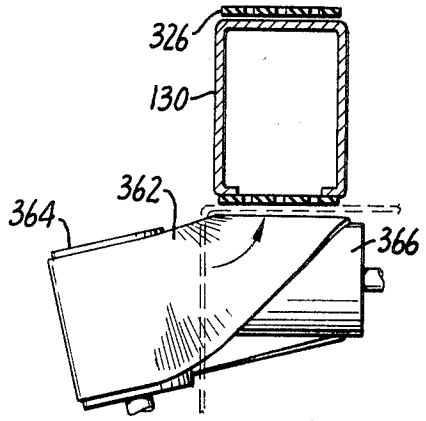

FIG. 14.

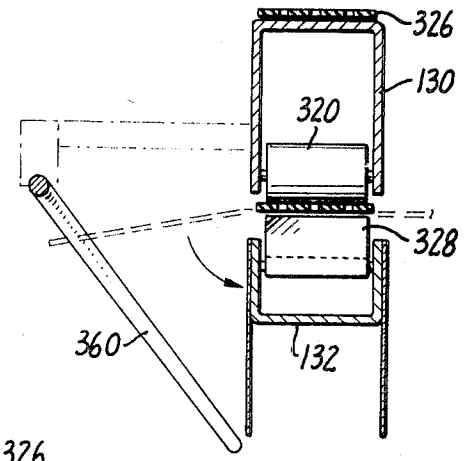

FIG. 15.

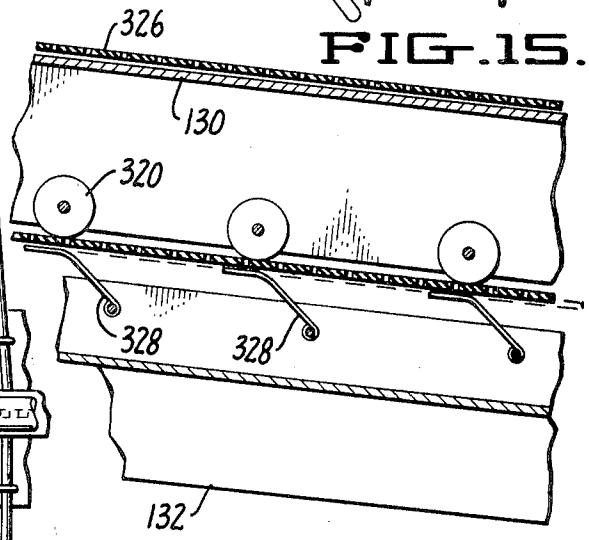

FIG. 16.

INVENTOR.
WILLIAM J. HOTTENDORF
BY
Naylor & Neal
ATTORNEYS

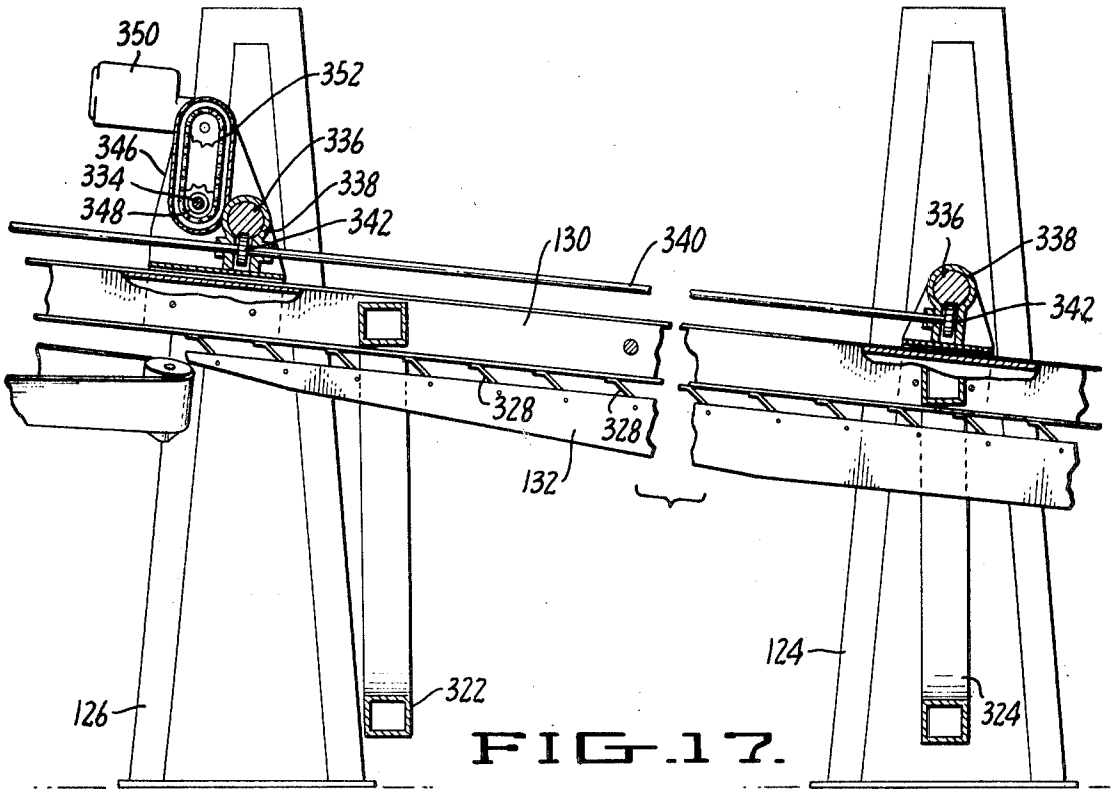

FIG-17.

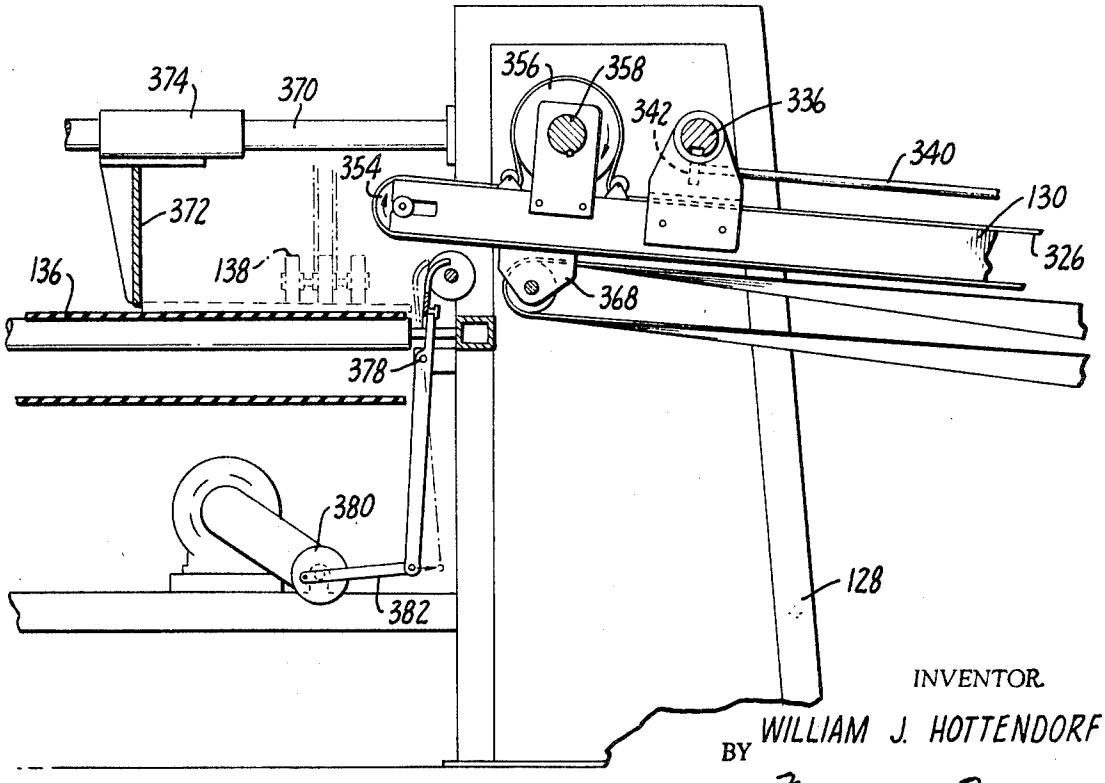

FIG-18.

INVENTOR.
WILLIAM J. HOTTENDORF
BY Naylor & Neal
ATTORNEYS

BOX MAKING MACHINE

CONTINUATION APPLICATION

This application is a continuation of copending application Ser. No. 627,041, filed Mar. 30, 1967, now abandoned.

BRIEF SUMMARY

Box making machines are available for high speed slotting and folding of paperboard boxes, and these machines may be equipped with attachments for either taping or gluing the box blanks as they are folded. However, such machines have not been available heretofor in which the box blanks can also be printed, and the available machines are so constructed that they are not readily adapted for the incorporation of printing units because a printing unit in such machines would either interfere with other sections of the machine or require very long "setup times". Thus, a single box making machine is used for making many different kinds of boxes, and it is necessary to "set up" the machine for a new kind of box whenever a run of a different kind of box is completed. The time necessary for and difficulty of this set up is a very important characteristic of a box making machine.

In accordance with this invention, I have provided a box making machine which operates very rapidly and performs on box blanks all of the operations mentioned above. The set up time of this machine is very short, and the printing sections do not interfere with the other sections of the machine.

The printing section includes a vacuum device for supporting and transporting the box blanks leaving one entire side of the box blank untouched except by the printing roller so that printing ink is not smeared and so that it is unnecessary during set up to move box hold down devices out of the path of printed parts of the box.

The apparatus includes a single section for slotting, creasing, trimming and taping of the box blanks. This slotter section is so constructed that its knives can be laterally adjusted for different boxes very easily. The adjustment structure which is used permits all sizes of the box blanks to be aligned against one side of the machine, and adjustments are provided at that side of the machine for positioning all knives. Thus, an operator standing in one convenient place is able to effect all set up operations of the slotter section.

The printer section includes a lateral adjustment for the vacuum transport which prevents excessive air flow through perforated transport belts when box blanks narrower than the belts are used. Additionally, this lateral adjustment of the printer is connected directly to means in the slotter section for laterally adjusting a trimming knife so that lateral adjustments of the vacuum transport in the printer are made automatically when the slotter is adjusted.

The folding section of the apparatus includes a new vacuum transport system which eliminates physical supports on one side of the box blanks at a critical point in the folding operation. Thus, in prior folders, box blanks have been transported between pairs of belts which grip the blanks. Where two panels of the blank are folded from coplanar to face-to-face positions, it has been necessary to use undesirable devices such as swords between the panels to hold one of the panels to a transport belt while the other panel is pressed against the first panel. In the apparatus of this invention, one panel of the box blank is supported solely by a vacuum belt on one of its faces while another panel is folded onto the other of its faces.

The apparatus of this invention includes a unique feeder which delivers box blanks to other components of the machine. This feeder includes the components of and may be operated as a conventional "kicker" which delivers box blanks to the machine periodically and in precise timed relation with other components of the machine. This feeder also employs, however, a selectively operable continuous feeder which feeds box blanks to the machine in a continuous stream and much more rapidly than does the kicker. Where precise timing may not be needed on a particular kind of box, as where the box is not to be slotted or is preslotted, the continuous feeder greatly increases the production capacity of the machine.

Other features and advantages of the invention will become apparent from the following description read in conjunction with the attached drawings in which:

DRAWINGS

FIG. 1 is a view in side elevation of apparatus constructed in accordance with this invention for feeding, printing, slotting and scoring, taping and folding paperboard box blanks with the figure including perspective views of a box blank at progressive positions in the apparatus.

FIG. 2 is a plan view of the apparatus of FIG. 1 illustrating in phantom outline an adjusted position of the apparatus;

FIG. 2A is a plan view of a box blank handled by the apparatus when the apparatus is in the full line position of FIG. 2;

FIG. 2B is a phantom plan view of a box blank handled by the apparatus when the apparatus is in the phantom line position of FIG. 2;

FIG. 3 is a side elevational view of the right hand portion of the apparatus of FIG. 1 on a larger scale than FIG. 1 and with side walls removed to illustrate the drive train of the apparatus;

FIG. 4 is a vertical sectional view through the box blank feeder taken along the plane indicated at 4—4 in FIG. 2;

FIG. 5 is a vertical sectional view taken along the plane indicated at 5—5 in FIG. 4;

FIG. 6 is a longitudinal sectional view taken through the printing and slotting sections of the apparatus along the composite plane indicated at 6—6 in FIG. 2 and showing the apparatus on a larger scale than FIG. 2;

FIG. 7 is a vertical sectional view taken along the plane indicated at 7—7 in FIG. 6;

FIG. 8 is a plan view of the apparatus of FIG. 7 partially broken away;

FIG. 9 is a plan view of the slotting apparatus as indicated at 9—9 in FIG. 6;

FIGS. 10–12 are sectional views taken along the planes indicated by corresponding numbers in FIG. 9;

FIG. 13 is a plan view of the folding apparatus as indicated at 13—13 in FIG. 1 and showing the apparatus on a larger scale;

FIGS. 14–16 are sectional views taken along the planes indicated by corresponding numbers in FIG. 13;

FIG. 17 is a vertical sectional view taken along the plane indicated at 17—17 in FIG. 2, and

FIG. 18 is a vertical sectional view taken along the plane indicated at 18—18 in FIG. 2.

DETAILED DESCRIPTION

General Arrangement

Referring now in detail to FIGS. 1 and 2, the preferred apparatus of this invention therein illustrated includes a feeder section 10 carrying a stack of paperboard box blanks 12 with the feeder adapted to feed the box blanks individually and sequentially to the remaining sections of the machine. A pair of printing sections 14 and 16 are mounted adjacent to the discharge end of the feeder 10 to receive box blanks from the feeder and print those box blanks with patterns which may be different and differently colored. The box blanks pass continuously through the printing sections 14 and 16 to a machine section 18 where the box blanks are trimmed, creased, slotted, and taped. The box blanks pass from the slotting section to an elongated transport and folding section 20 and hence to a delivery section 22.

As illustrated in FIG. 1, the box blank undergoes progressive operations in each section of the machine. More specifically, the box blank 24 fed from the feeder 10 is printed with one pattern 26 in the printer section 14 and with another pattern 28 in the printer section 16. In the slotter section 18, the

edges of the box blank are trimmed as indicated at **30**, and the box blank is provided with leading and trailing slots **32** and **34**, respectively. The box is also provided with longitudinal and transverse creases **36** and **38**, respectively, and a strip of adhesive tape **40** is applied to one edge of the box blank. The positions of the leading and trailing slots **32** and **34** and the positions of the longitudinal creases **36** divide the box blank into four panels **42**, **44**, **46** and **48**.

As the box blank moves from the slotting section through the folding section, the panels **42** and **48** are pivoted downwardly while the panels **44** and **46** are supported from both sides, and the panels **42** and **48** are then further folded onto the undersides of the panels **44** and **46** while the panels **44** and **46** are supported only from the top. As this final folding is accomplished, the free edges of the panels **42** and **48** come into abutting relation with each other, and the two panels are attached together by the adhesive tape **40**. Preferably, the adhesive on the tape **40** sets at a sufficiently slow speed that the box may be squared in the delivery section as explained hereinafter, and the adhesive tape **40** permanently binds the panels **42** and **48** together as the box blanks move out through the delivery section.

As indicated in FIGS. **1–3**, this apparatus is adapted to be connected to a prime mover as by means of a chain and sprocket mechanism **50**, and a line shaft **52** driven by the prime mover extends through the feeding, printing and slotting sections with the line shaft formed in segments which are coupled by couplings **54**. A right angle drive is provided in each of the sections of the machine connected to the line shaft **52** for driving the individual section of the machine in synchronization with the other sections of the machine.

As explained in detail hereinafter, the feeding section **10** is provided with kicker arms **58** which may be reciprocated periodically toward and away from the printing section **14** to start movement of a box blank down an elongated path through the machine. As a box blank starts through the printer, it is gripped by a pair of conventional drive rolls **60** and further advanced through the machine. The drive rolls **60** are driven from the right angle drive **56** in the feeder by conventional means.

The printing sections **14** and **16** are provided with opposed printing and pressure rollers **62** and **64** on opposite sides of the path of the box blanks, and suitable printing plates or rubber mats **66** are mounted on the printing rolls for transferring printing ink to box blanks. Each printing unit includes a pair of reservoir and ink transfer rolls **68** which periodically transfer ink to the printing plates **66**.

An elongated perforated belt **70** extends through the printing sections **14** and **16** along the plane of the path of travel of box blanks, and the belt **70** is supported and driven by a pair of rolls **74**. One of the rolls **74** is driven by a sprocket **72** which is in turn driven by a chain **76** and a sprocket on the output shaft **78** of the right angle drive **56** in the slotter section **18**.

As explained in greater detail hereinafter, and as illustrated schematically in FIG. **1**, a plenum chamber **80** is mounted in the printing sections **14** and **16** underneath the perforated belt **70**, and the plenum chamber is connected to the suction side of a fan so that suction in the plenum chamber **80** holds box blanks against the perforated belt **70** while the box blanks are transported through printing sections **14** and **16**.

Drive Train

The slotter section **18** includes two pairs of upper and lower shafts **82** and **84** on which are mounted slotting knives as explained in greater detail hereinafter. A pair of shafts **86** and **88** are mounted on opposite sides of the path of box blanks for supporting creasing knives. The lower slotting knife shaft **84** and the lower creasing knife shaft **86** are driven by sprockets which engage the chain **76** as illustrated in FIG. **3**, and the upper knife shafts **82** are driven by a separate chain **90** which is driven by a sprocket on the output shaft of the right angle drive **56** in the slotter section as illustrated in FIG. **3**. For the sake of clarity it should be noted that the chain **76** extends along an endless path from a sprocket on the output shaft **78** of the right angle drive **56** hence over an idler sprocket **92**, hence over the sprocket **74** on the drive roll **72** of the vacuum belt **70**, hence sequentially over sprockets **94**, **96**, **98** and **100**, hence over a drive sprocket on the shaft **84** which supports the trailing edge slotter knives, hence over an idler sprocket **102** and over drive sprockets on the shafts **88** and **86**, hence over an idler sprocket **104** and over a drive sprocket on the shaft **84** which supports leading edge slotting knives and finally back to the sprocket on shaft **78**.

The second chain **90** extends from a second sprocket on the shaft **78** hence over a drive sprocket on the shaft **82** which supports the upper trailing edge slotting knives, hence over a drive sprocket on the shaft **82** which supports the upper leading edge slotting knives, and hence over an idler sprocket **106** to the sprocket on shaft **78**.

As indicated in FIG. **3** by the section marks on shaft **82**, the machine is provided with conventional running registers on those shafts which may need phase adjustments with respect to other rotating shafts in the machine. Thus, the gear and sprocket and teeth ratios in the drive train described above are selected so that the drive rolls **60** in the feeder are driven at the same peripheral speed as the linear speed of belt **70**, and the printing rollers **62** and the slotting and creasing knives on shafts **82–88** are driven at the same peripheral speed as the linear speed of the belt **70**. While these components of the machine operate at the same speeds, it is necessary during setup to adjust the phase relations of some of these shafts so that the patterns printed by the printing rolls are located in the proper positions on the box blanks and so that the slots made by slotting knives on the shafts **82–84** are properly located on the box blanks. For this reason, running registers are provided on the shafts **82** and on the shafts **108** within the drive train of the printing roller.

As best indicated in FIG. **3**, the printing roller **62** is mounted on a shaft **110** and driven by a sprocket **112** from a sprocket **114** on the shaft **108**. The shaft **108** is driven by a chain **116** which extends over sprockets **118** and **120** and over a sprocket **122** on the output shaft of the right angle drive unit **56** in the printer. The sprocket **118** is connected to the pressure roller **64** (see FIG. **1**) to drive the pressure roller at the same peripheral speed as the printing roller, and drive means, not shown, are provided for driving the inking rollers **68**.

The folding and delivery sections of the machine include three main frame sections **124**, **126** and **128**. An elongated frame **130** extends between all three of these frame sections and projects forwardly to the discharge area of the slotting section **18**. An elongated frame **132** extends between the frame sections **124** and **126** and projects to the discharge area of the slotting section **18** with the two frame sections **130** and **132** defining the box blank path between them. As illustrated in FIG. **2**, two pairs of frame sections **130** and **132** are provided, and during setup of the machine, the positions of these frame sections are laterally adjusted so that the panels **44** and **46** of the box blank (FIG. **1**) are embraced between the frame sections **130** and **132** at locations adjacent to the edges of panels **142** and **148**. Thus, as illustrated in phantom outline in FIG. **2**, one of the pairs of frame sections **130** and **132** may be moved laterally by means described in greater detail hereinafter to the phantom line position **134**.

The delivery section of the machine includes a conveyor **136** arranged at right angles to the path of box blanks through the remainder of the machine and a hold down mechanism **138** is mounted above the conveyor **136** for holding box blanks in shingled relation on the conveyor **136** under pressure while the adhesive on tape strips **40** sets. The driving mechanism for the moving parts in the folding and delivery sections of the apparatus is independent of the drive for the other sections and will be described in connection with the detailed description which follows.

Feeding Section

As illustrated in FIGS. 4 and 5, the feeding section includes two side frame members 140 connected by a bottom frame portion 142 and supporting the feed rolls 60. A table top 144 extends between the side frame members 140 and is provided with a pair of slots in which the kicker arms 58 are mounted. The kicker arms are pivotally connected at 146 to a pair of links 148 which are in turn pivotally connected to a pair of rockers 150. The rockers 150 are pivotally mounted on the frame of the machine at a pivot shaft 152, and the shaft 152 is connected to a telescopic arm 154 pivotally connected to a gear 156 so that the arm 154 and rocker 150 rock between the positions illustrated in FIG. 4 as the gear 156 rotates.

Gear 156 is rotated by a pinion 158 on a shaft 160 which is driven by a gear 162. The gear 162 is driven by a shifting gear 164 which is in turn driven by a gear 166 on the output shaft of the right angle drive 56 in the feeder unit.

A vertical wall 168 extends between side frame members 140 and has a lower edge 170 which is positioned above the top of table top 144 by a distance equal to the thickness of one paperboard box blank to be handled. The wall 168 may be adjusted vertically by conventional means to accommodate for box blanks of different thicknesses. As mentioned above, the kicker operates to deliver box blanks periodically at accurately timed intervals, and the kicker operates in this way by reciprocating the arms 58 to the left and to the right as indicated in FIG. 4 responsive to rocking of the arms 150 and 154 in synchronization with rotation of the gear 166 and drive shaft 52.

An open topped plenum chamber 172 is mounted adjacent to the top surface of table 144 in an opening provided in the table 144, and the plenum chamber includes an exhaust port 174 which in operation of the machine is connected to the suction side of a fan. A perforated belt 176 extends across the open top of the plenum chamber 172 and is supported on three rollers 178, 180 and 182. As indicated in FIG. 3, the roller 178 is connected to a sprocket 184 which is driven by a chain 186 entrained over a drive sprocket 188. The drive sprocket 188 is driven by means of a gear 190, and the gear 190 is mounted adjacent to the shifting gear 164 so that the shifting gear may be moved axially of the shaft on which it is mounted out of engagement from the gear 162 into engagement with the gear 190. When the shifting gear 164 is thus shifted, the kicker arms 158 are not operated, and instead roller 178 is rotated to move the perforated belt 176 along its endless path. This movement of the belt 176 causes paperboard box blanks to be fed in a continuous stream under the lower edge 170 of the wall 168 with the box blanks being held to the top surface of the belt by suction.

As indicated in FIG. 5, the belt 176 is divided into three segments entrained over the roller 178 with the three segments extending parallel to each other along the upper surface of the table top to provide operating room for the kicker arms 158. When the feeder is in operation with the kicker arms 158 reciprocating and the perforated belt 176 stationary, a steel plate may be placed across the top of the belt 176 to prevent frictional engagement between the box blanks and the belt 176 in the area adjacent to the bottom edge of the wall 168.

Printing Section

With reference to FIGS. 6, 7, and 8, each of the printing units 14 and 16 includes a pair of side frame members 192 between which the printing rollers 62 are mounted. The ink reservoir and transfer rollers 68A and 68B are also mounted between the side frame members 192 and define between them an ink reservoir. Ink is transferred by the roller 68B from the ink reservoir to the printing plates on the printing roller 62. The pressure rollers 64 are also mounted between the side frame members 192 with the pressure rollers 64 directly underneath the printing roller 62 for supporting box blanks while they are printed. As mentioned above, the elongated perforated belt 70 mounted on roller 74 has a top belt run which extends along the plane of movement of box blanks in the machine and between the printing roller 62 and pressure roller 64. Three sections of plenum chamber 194, 196 and 198 are mounted between the side frame members 192 underneath the upper reach of the perforated belt 70. The plenum chambers 194–198 are provided with lateral passageways which communicate with a manifold 200 which is in turn connected to an exhaust port 202. The exhaust port 202 is connected to the suction side of a fan during operation of the machine so that box blanks are held onto the upper run of the belt 70 by suction and carried by the belt 70 through the printing rollers. As illustrated in FIGS. 7 and 8, a series of support rods 204 are mounted on the plenum chambers 194–198 extending across their open tops to support the top run of the belt and prevent the belt from caving in under the effect of the vacuum in the plenum chamber, and a pair of ribs 206 on the belt 70 extend in between the support rods 204 for keeping the belt 70 aligned with its path.

As illustrated in FIGS. 7 and 8, each of the plenum chambers 194–198 is divided into two compartments 208 and 210 by means of an interior baffle 212. Only the compartment 208 on the left hand side of the baffle, as illustrated in FIG. 7, is connected to the exhaust port 202 so that the suction fan does not draw any substantial amount of air from the compartment 210 during operation of the device.

An elongated screw 214, 216 and 218 extends through each of the plenum chambers 194–198, respectively, supported for rotation therein by means of bearings 220, and the baffles 212 are threadedly mounted on the screws 214–218 by threaded sleeves 222. A sprocket is mounted on each of the screws 214–218 as indicated at 224 in FIG. 7, and as explained in greater detail hereinafter, all of the sprockets 224 are connected together by a chain and sprocket mechanism 246 so that all of the sprockets 224 rotate simultaneously to move the baffles 212 laterally of the path of box blanks.

Slotting Section

With reference to FIGS. 6 and 9–12, the slotting section includes a pair of side frame members 228 and 230 in which the shafts 82–88 are rotatably mounted. A pair of trimming knives 232 are rotatably mounted on the shafts 86 and 88 (FIG. 10) for trimming one edge of the box blanks moving through the path. The trimming knives 232 are keyed to the shafts 86 and 88 so that they rotate with the shafts, but they may be moved longitudinally of the shafts to adjust the width of the box blank which will be trimmed by the knives. This adjustment is accomplished by means of a yolk 234 above the path of box blanks and slidably supported on a pair of rods 236. A lower yolk 238 is slidably mounted on a pair of rods 240, and means are provided outside of the path of travel of box blanks for supporting the yolks 234 and 238 in fixed relation with each other to maintain the upper and lower knives 232 in engagement with each other. An elongated screw 242 extends between the side frame members 228 and 230 of the slotting section and is journaled in those frame members to permit the screw to be rotated without moving axially, and a threaded sleeve 244 threaded onto the screw 242 is mounted in the yolk 234 so that the yolks 234 and 238 move laterally of the machine when the screw 242 is rotated. As illustrated in FIG. 6, the screw 242 is connected by a chain and sprocket linkage 246 to the sprockets 224 on the screws 214–218 in the printer section so that rotation of the screw 242 causes not only lateral adjustment of the trimming knives, but also lateral adjustment of the baffles 212 in the printing section transport. In this way, the baffles 212 and trimming knives 232 are maintained in substantially the same plane which extends along the length of the path of box blanks perpendicular to the belt 70.

A pair of creasing knives 248 are also mounted on the shafts 86 and 88 for rotation in a second plane parallel to the plane of rotation of the trimming knives 232, and the creasing knives 248 are mounted on upper and lower yolks 250 and 252 which

are supported on the rods **236** and **240** in a manner similar to the support of the yolks **234** and **238**. An elongated screw **254** extends between the side frame members in a manner similar to the screw **242** and is threadedly mounted in a sleeve **256** attached to the upper yolk **250**. A screw **258** also extends between the side frame members below the path of box blanks and is threadedly received in a threaded sleeve (not shown) on the lower yolk **252**. As illustrated in FIG. **12**, a chain **260** extends sequentially over a sprocket on screw **254**, hence over a sprocket on the screw **258**, hence over a sprocket **262** and an idler sprocket **264** so that the screws **254** and **258** are rotated in synchronization with each other. An electric motor **266** is mounted on the frame member **230** for rotating the sprocket **262**, and an electrical switch, not shown, is mounted on the frame member **228** so that an operator may manipulate the switch to cause lateral adjustment of the creasing knives **248**.

In a similar manner, a screw **268** is connected by a chain **270** to a sprocket **272** connected to electric motor **274**, and the chain **270** also passes over a sprocket on the screw **242**. The shaft **268** is threaded into a threaded sleeve in the yolk **238** so that operation of the electric motor **274** moves both of the trimming knives **232** simultaneously.

A second set of trimming knives **276** (FIG. **9**) are mounted on the shafts **86** and **88** at the left hand end of the machine illustrated in FIG. **9**, and these trimming knives **276** are non-adjustably mounted on the shafts **86** and **88** in the sense that they are not readily adjustable axially of the shafts. The trimming knives **276** rotate in a third plane parallel to the plane in which the trimming knives **232** rotate.

A pair of creasing knives **278** are also mounted on the shafts **86** and **88** in a fourth plane between the second and third plane mentioned above with the creasing knives **278** mounted on upper and lower yolks **280** and **282** on the rods **236** and **240**. In a manner similar to the mounting of the other yolks, the yolks **280** and **282** are threadedly connected to threaded rods **284** and **286** which are driven in synchronization with each other by a chain **288** and electric motor **290** (FIG. **12**).

A third set of creasing knives **292** are mounted on the shafts **86** and **88** for rotation in a fifth plane between the second and fourth planes mentioned above. As best seen in FIG. **11**, the creasing knives **292** may be adjusted longitudinally of the shafts **86** and **88** by means of a pair of yolks **294** and **296** which are mounted on the rods **236** and **240**. A pair of screws **298** and **300** extending between the side frame members are threadedly received in threaded sleeves **302** and **304**, respectively, in the yolks **294** and **196**, respectively, and the screws **298** and **300** carry sprockets connected by a chain **302** (FIG. **12**) which is driven by a sprocket **304** and electric motor **306** so that operation of the electric motor **306** causes the creasing knives **292** to move laterally of the machine. The controls for all of the electric motors **266**, **274**, **290**, and **306** are mounted on the frame member **228** so that an operator standing at this position can effect all of the lateral adjustments in the slotting section of the apparatus.

As illustrated in FIGS. **9–11**, conventional slotting knives are mounted on the shafts **82** and **84** for rotation in the plane of rotation of each of the pairs of creasing knives **248**, **278**, and **292**. The various sets of slotting knives are similar to each other and for the purpose of illustration, FIG. **11** illustrates the slotting knives which operate in the plane of creasing knives **292**.

Thus, with reference to FIG. **11**, a male slotting knife **308** is mounted on each of the shafts **82**, and a pair of female slotting knives **310** is mounted on each of the shafts **84**. The slotting knives are keyed to their respective shafts and are supported by the yolks **294** and **296** so that the slotting knives are moved laterally of the machine with the creasing knives on those yolks. In this regard, it may be noted in FIG. **11** that the rods **236** and **240** are provided with elongated rack gears **312**, and a shaft **314** is mounted in the yolk for rotation and provided with a pair of pinion gears **316** on its ends with the pinion gears **316** in engagement with the rack gears **312** to prevent skewing of the yolks as the yolks move along the rods **236** and **240**.

As illustrated in FIG. **11**, the lower drive shafts **84** and **86** are vertically adjustable to permit adjustment of the slotter section to accommodate paperboard blanks of different thickness. It will also be noted that conventional stripper fingers **318** extend in between the female slotting knives to remove pieces of paperboard which are forced in between the female slotting knives by the male slotting knives.

With reference to FIG. **11**, the slotting section of the apparatus also includes means for taping flaps of the box blank together when the box blank is subsequently folded. Thus, as illustrated in FIG. **10**, a pair of crusher rolls **320** are mounted on the shafts **82** and **84** generally in the plane of the trimmer knives **276**, and additional crushing rolls **322** are mounted on the shafts **82** and **84** generally in the plane of the other trimming knives **232**. The crusher rolls **320** and **322** engage paperboard box blanks between them and reduce the thickness of the paperboard by a distance equal to the thickness of adhesive tape subsequently to be applied to the box blank. The pressure rolls **320** may also be adjusted to completely crush an edge flap on the box blank where it may be desirable to secure the box flaps together by gluing instead of taping.

A taping wheel **234** is mounted on the shaft **82** which carries the leading edge slotting knives, and the taping wheel is provided with a hollow interior connected to a manifold **236** which is adapted to be connected to the suction side of a fan. Means including a feed wheel **238** are provided for applying to the periphery of the taping wheel **234** short segments of adhesive tape in timed relation with the arrival at the taping wheel of portions of the edges of the box blanks so that a strip of adhesive tape is applied to the edge of the box blank as illustrated at **40** in FIG. **1**.

Folding Section

Referring now in detail to FIGS. **13–18**, it will be recalled that the folding section includes vertical pairs of frame members **124**, **126** and **128** with two pairs of elongated frames **130** above the path of travel of box blanks and two pairs of frames **132** below the path of travel of box blanks. The upper frame members **130** are made in the form of inverted U-shaped channels with rollers **320** mounted in the bottom open side of the channel. The interior of the channel **130** is connected by exhaust conduits to the suction side of a fan, and an elongated perforated belt **326** extends around each of the channels **130** with a flat run of the belt extending across the rollers **320** on the bottom open side of the channel. In this way, box blanks are held against the underside of the channels **130** by suction. As indicated in FIG. **15**, the upper side of the lower frame member **132** is provided with a plurality of spring fingers **328** which also hold the box blanks upwardly against the underside of the channel **130**. The lower frame member **132** extends only part way along the length of the upper frame member **130**, and the interiors of the U-shaped channels **130** are connected to a suction supply near their upper ends by means of air ducts **330** communicating with the interior of the channels **130** and connected by flexible conduits **332** to the suction side of a fan **334** (FIG. **1**).

As indicated above, the upper and lower frames **130** and **132** are mounted on the vertical frames **124–128** for lateral adjustment. Thus, each pair of frames **124–128** are connected by cross beams **336** which have rack gears cut in their undersides. The frames **130** are supported on these beams **336** by means of sleeves **338**, and the lower frames **132** are supported on the upper frames **130** by means of support beams **322** which extend from the upper frames **130** out around the sides of the path of box blanks and up under the lower frames **132**.

An elongated rod **340** is mounted above each of the frame members **130** journaled in the support which holds the frame **130** to each of the sleeves **338**, and a pinion gear **342** is mounted on the rod **340** engaging each of the racks and on the beams **336**. Thus, when one of the rods **340** is rotated, the supports for the frame **130** on all of the beams **336** move uniformly across the beams **336**. A stationary screw **344** is

mounted on the vertical frames 126 adjacent to and parallel to the beam 338 thereon. A frame 346 is mounted on each of the upper frames 130 adjacent to this stationary screw 344, and a sprocket 348 is mounted on each of the supports 346 threadedly received on this stationary screw 344 so that rotation of each of the sprockets 348 will cause one of the frames 130 with its depending frame 132 to move laterally of the machine. An electric motor 350 is connected by a chain 352 to each of the sprockets 348 to cause rotation of the sprockets 348, and electrical controls for the motor 350 are provided adjacent to the controls for the slotting section so that all lateral adjustments in the machine may be made simultaneously.

As illustrated in FIG. 18, the perforated belt 326 passes around a roller 354 at the upper end of each channel 130 and hence over a drive roller 356 which is driven by a shaft 358 and a motor, not shown, for driving both belts 326 in synchronization with each other. In this way, the perforated belts on the channels 130 move box blanks from the discharge area of the slotting station 18 toward the delivery station of the machine, and during travel of the box blanks from the slotting section to the vertical frames 126, the box blanks are held from below by spring fingers 328 urging the box blanks upwardly against the belts 326. As illustrated in FIGS. 13 and 15, a folding rod 360 is mounted on each of the channels 130 positioned to engage the side flaps of the box blanks and fold them through an angle of 90° from a first position parallel to the plane of the belts 326 to a second position perpendicular to that plane. That is, the folding rails 360 move from a first position adjacent to the slotting station where the rails are above the path of box blanks and spaced outwardly from the vertical planes of rotation of the creasing knives 248 and 278 as illustrated in FIG. 9. From this initial position, the folding rails move through the plane of the path of box blank travel to a position adjacent to the vertical planes through creasing knives 248 and 278. This second position is illustrated at the position of the folding rails adjacent to the vertical frame members 126. As box blanks move along the length of the folding rails, the laterally projecting box flaps are folded through an angle of 90° while the box blanks are supported from below adjacent to the fold line by the lower frames 132 and spring fingers 328. At the vertical frames 126, however, the lower frames 132 terminate thereby exposing the undersides of the panels of the box blanks which are directly in contact with the belts 326. At this position, folding belts 362 are mounted to fold the partially folded flaps through an additional 90° into positions underlying the box blank panels which directly engage the belt 326. Thus, as illustrated in FIGS. 13, 14, 17 and 18, a roller 364 is mounted adjacent to each of the channels 130 at the vertical frames 126 with the axles of the rollers 364 extending generally vertically and positioned at the side of the channels 130. A second roller 366 is mounted on a bracket 268 underneath the channel 130 adjacent to its terminal end, and the belt 362 is entrained over rollers 364 and 366 in a twisted path where the belts first engage the flap which has been folded through 90° and then folds the flap through an additional 90° until the flap is pressed against the underside of the remainder of the box blank by the belt and roller 366. At this condition, the box blank has been folded to the final condition illustrated in FIG. 1, and the box blank passes beyond the end of the belts 326 onto the delivery conveyor 136. The delivery conveyor 136 is moving laterally at a speed much slower than the speed of the belts 326 so that the folded boxes are deposited on the delivery belts 136 in shingled relation. A pair of rods 370 are mounted above the delivery conveyor 136, and a metal plate 372 is adjustably mounted on the rods 370 by means of a pair of sleeves 374. Facing toward the plate 372 is a rocker plate 376 which rocks between the full line position illustrated in FIG. 18 and the phantom line position. The plate 376 is pivoted back and forth by its pivotal mounting at axis 378 on the frame and an eccentric drive 380 and linkage 382. During set up of the machine, the position of the plate 372 is adjusted so that the distance from the plate 372 to the rocker plate 376 corresponds to the length of the folded box. After the folded boxes have passed on to the delivery conveyor 136, they are repeatedly squeezed between the plates 372 and 376 as the plate 376 moves back and forth, and this squeezing action squares the boxes. As the boxes are being squared, and after they have been squared, they move outwardly along the delivery conveyor 136 under the pressure hold down mechanism 138 described above.

While one specific embodiment of this invention has been illustrated and described in detail herein, it is obvious that many modifications thereof may be made without departing from the spirit and scope of the invention.

Accordingly, I claim:

1. Apparatus for handling paperboard boxes for printing comprising a frame, a plenum chamber having an open top and an exhaust port adapted to be connected to the suction side of a fan, an endless perforated belt having a run thereof extending across said open top of said plenum chamber, drive means for continuously moving said belt at a predetermined speed for transporting paperboard box blanks in a path over said plenum chamber, a printing roller mounted above said path for rotation about an axis extending transverse to said path, said roller having printing means on the periphery thereof adjacent said path for printing box blanks in said path, means connecting said printing roller to said drive means for continuously rotating said roller at a peripheral speed equal to said predetermined speed, box blank feeder means operable to continuously feed paperboard box blanks on to said endless belt in spatial relation to each other, only a single baffle mounted in said plenum chamber and dividing said plenum chamber into two compartments, only one of which communicates with said exhaust port, adjusting means for moving said baffle in a direction generally parallel to said axis of said roller, and box blank guide means to enable uniform positioning of corresponding edge portions of the box blanks regardless of the width of said blanks.

2. Apparatus for handling paperboard boxes for printing comprising a frame, a plenum chamber having an open top and an exhaust port adapted to be connected to the suction side of a fan, an endless perforated belt having a run thereof extending across said open top of said plenum chamber, drive means for continuously moving said belt at a predetermined speed for transporting paperboard box blanks in a path over said plenum chamber, a printing roller mounted above said path for rotation about an axis extending transverse to said path, said roller having printing means on the periphery thereof adjacent said path for printing box blanks in said path, means connecting said printing roller to said drive means for continuously rotating said roller at a peripheral speed equal to said predetermined speed, box blank feeder means operable to continuously feed paperboard box blanks on to said endless belt in predetermined spatial relation to each other, a pressure roller mounted for rotation about an axis parallel to the axis of said printing roller, said pressure roller having the top thereof disposed adjacent said open top of said plenum chamber and adjacent and on the opposite side of said path from said printing roller, a second plenum chamber having an open top disposed adjacent said pressure roller and on the opposite side of said pressure roller from said first plenum chamber, said second plenum chamber having said run of said belt extending over its open top, and a pair of rollers in said drive means, one of said rollers being positioned on one side of said plenum chambers and said pressure roller and the other of said rollers being disposed at the other side of said plenum chambers and said pressure roller, said rollers together supporting and driving said run of said belt across both of said plenum chambers and said pressure roller.

3. Apparatus for handling paperboard boxes for printing comprising a frame, a plenum chamber having an open top and an exhaust port adapted to be connected to the suction side of a fan, an endless perforated belt having a run thereof extending across said open top of said plenum chamber, drive means for continuously moving said belt at a predetermined

speed for transporting paperboard box blanks in a path over said plenum chamber, a printing roller mounted above said path for rotation about an axis extending transverse to said path, said roller having printing means on the periphery thereof adjacent said path for printing box blanks in said path, means connecting said printing roller to said drive means for continuously rotating said roller at a peripheral speed equal to said predetermined speed, box blank feeder means operable to continuously feed paperboard box blanks on to said endless belt in predetermined spatial relation to each other, a pressure roller mounted for rotation about an axis parallel to the axis of said printing roller, said pressure roller having the top thereof disposed adjacent said open top of said plenum chamber and adjacent and on the opposite side of said path from said printing roller, a second plenum chamber having an open top disposed adjacent said pressure roller and on the opposite side of said pressure roller from said first plenum chamber, said second plenum chamber having said run of said belt extending over its open top, a pair of rollers in said drive means, one of said rollers being positioned on one side of said plenum chambers and said pressure roller and the other of said rollers being disposed at the other side of said plenum chambers and said pressure roller, said rollers together supporting and driving said run of said belt across both of said plenum chambers and said pressure roller, only a single baffle mounted in each of said plenum chambers and dividing each plenum chamber into a pair of compartments, only one compartment of each pair communicating with said exhaust port, and adjusting means for simultaneously moving said baffles at the same speed in a direction generally parallel to said axis of said printing roller.

* * * * *