Jan. 1, 1957 R. W. POINTER 2,775,869

PLATFORM CONSTRUCTION

Filed April 22, 1952 10 Sheets-Sheet 1

Fig. 1.

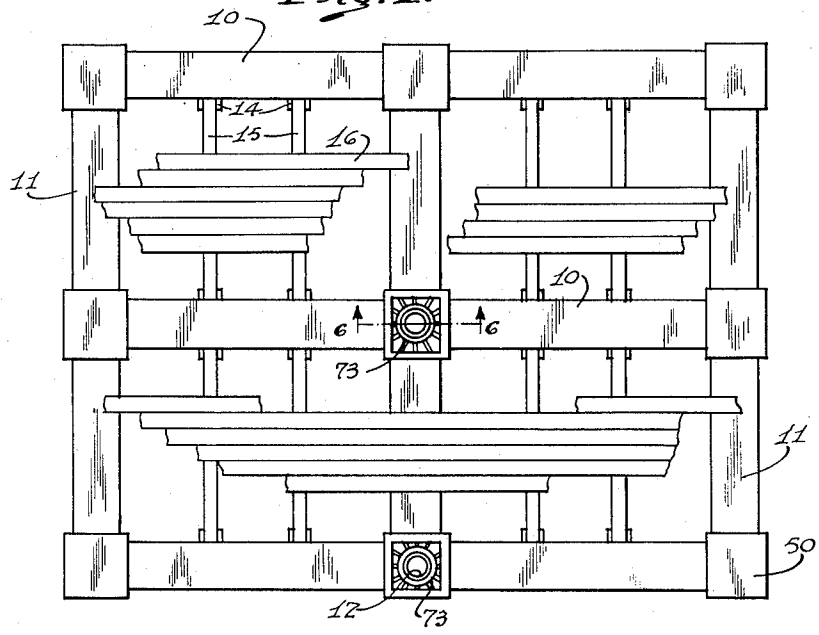

Fig. 2.

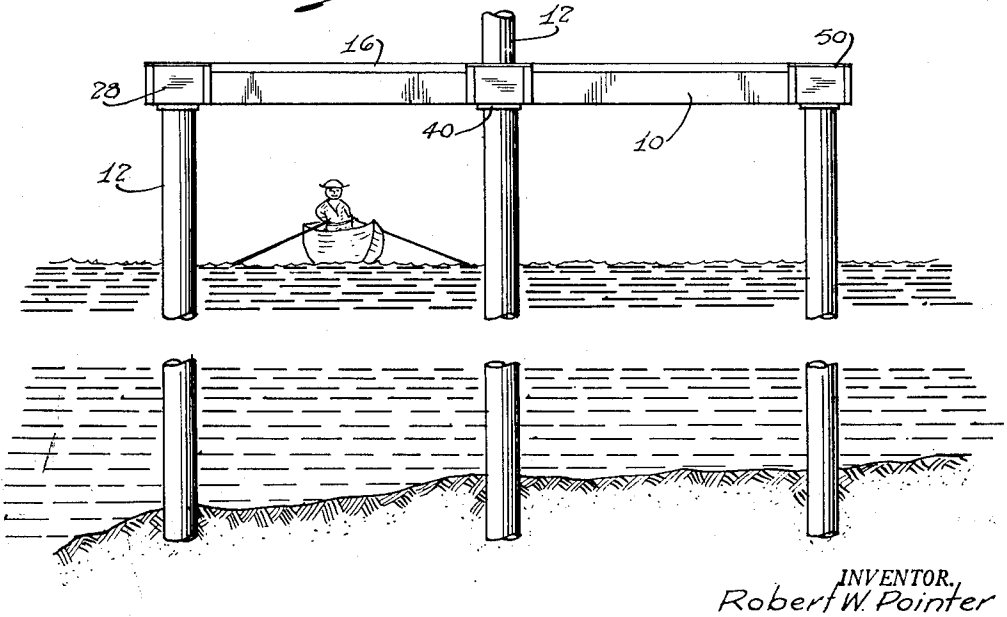

INVENTOR.
Robert W. Pointer

BY

Cushman, Darby & Cushman

ATTORNEYS

Jan. 1, 1957 R. W. POINTER 2,775,869

PLATFORM CONSTRUCTION

Filed April 22, 1952 10 Sheets-Sheet 2

Fig. 4.

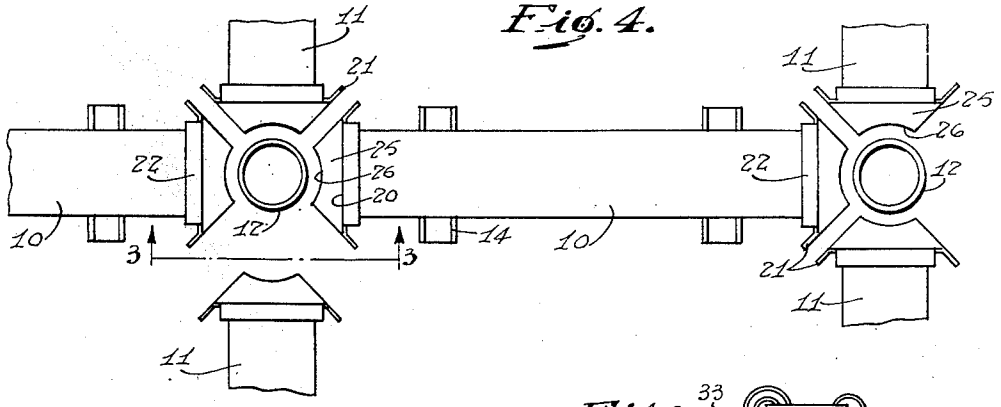

Fig. 3.

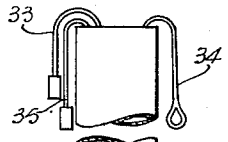

Fig. 5.

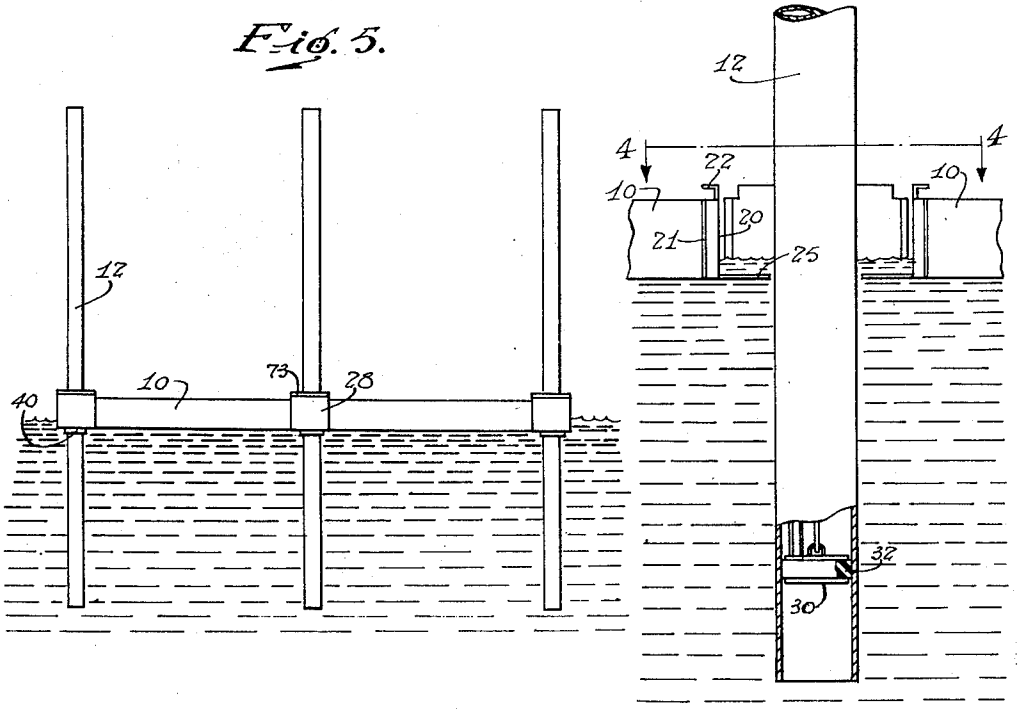

INVENTOR.
Robert W. Pointer

BY

Cushman Darby & Cushman

ATTORNEYS

Jan. 1, 1957 R. W. POINTER 2,775,869

PLATFORM CONSTRUCTION

Filed April 22, 1952 10 Sheets-Sheet 3

Fig. 6.

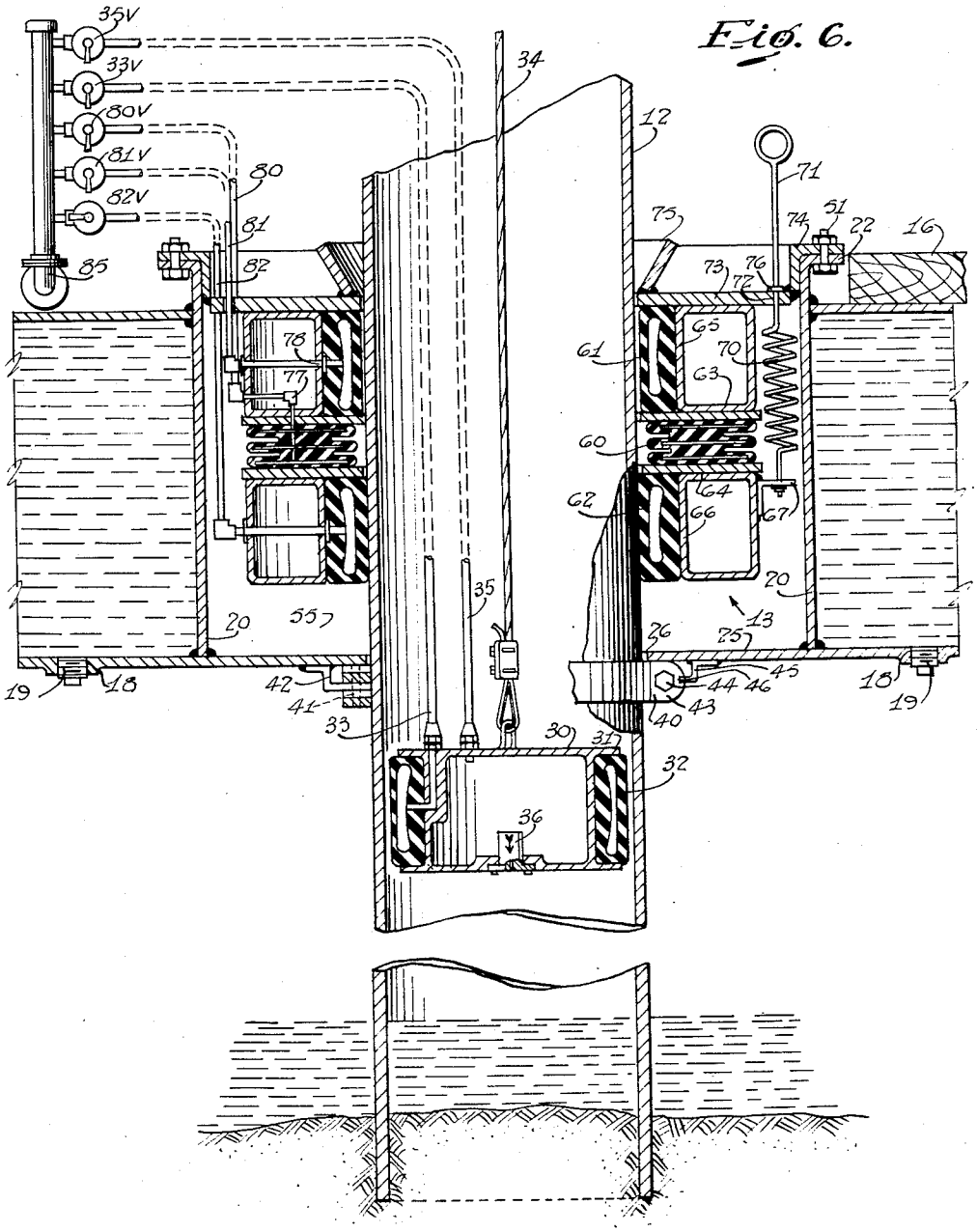

INVENTOR,
Robert W. Pointer

BY

ATTORNEYS

Jan. 1, 1957 R. W. POINTER 2,775,869

PLATFORM CONSTRUCTION

Filed April 22, 1952 10 Sheets-Sheet 4

Fig. 7.

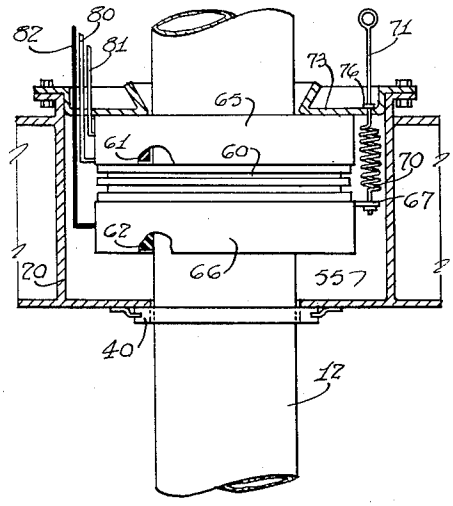

Fig. 8.

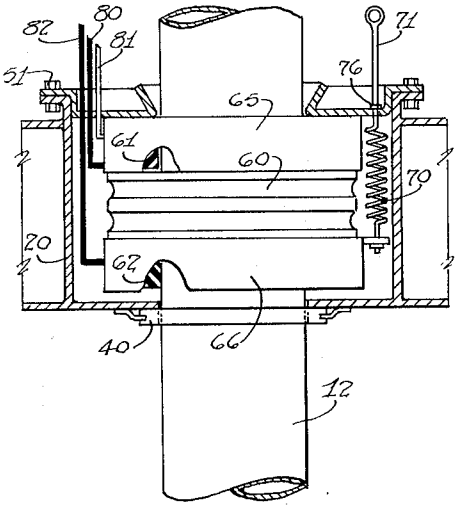

Fig. 9.

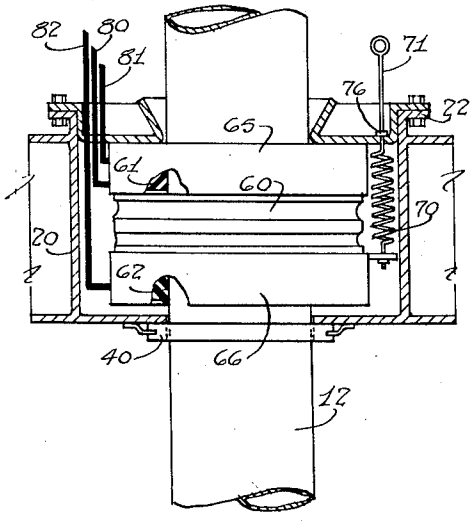

Fig. 10.

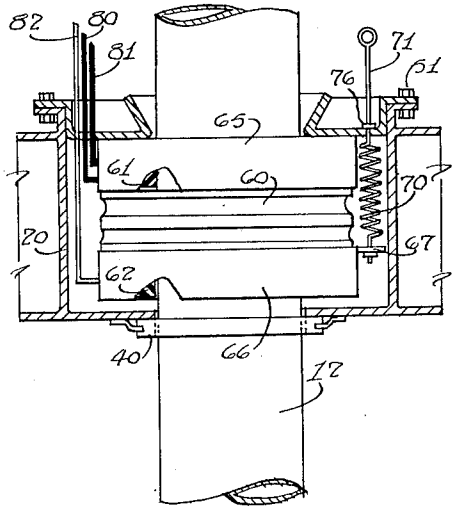

INVENTOR.
Robert W. Pointer
BY
Cushman Darby Henderson
ATTORNEYS

Jan. 1, 1957 R. W. POINTER 2,775,869

PLATFORM CONSTRUCTION

Filed April 22, 1952 10 Sheets-Sheet 5

Fig. 11.

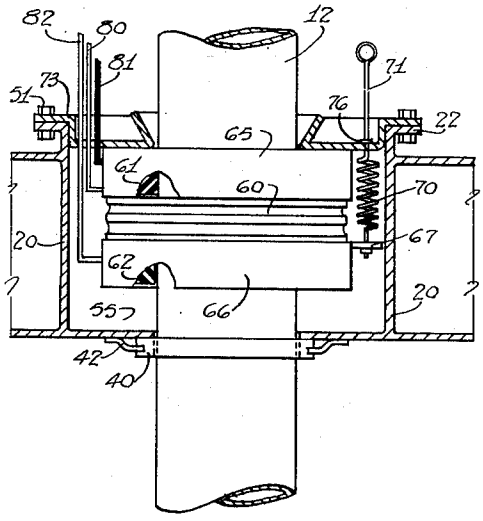

Fig. 12.

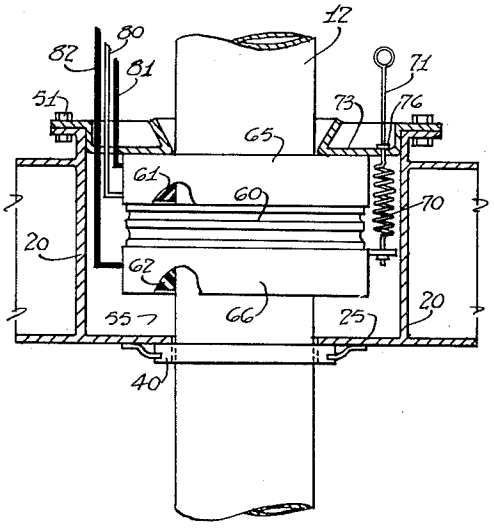

Fig. 13.

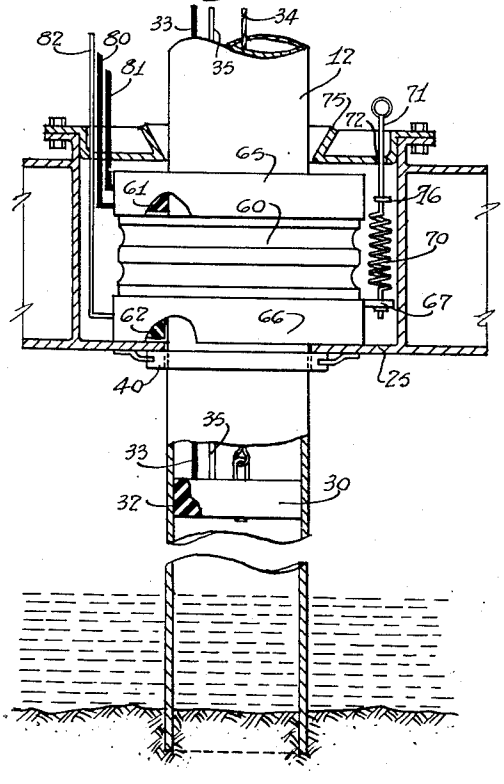

Fig. 14.

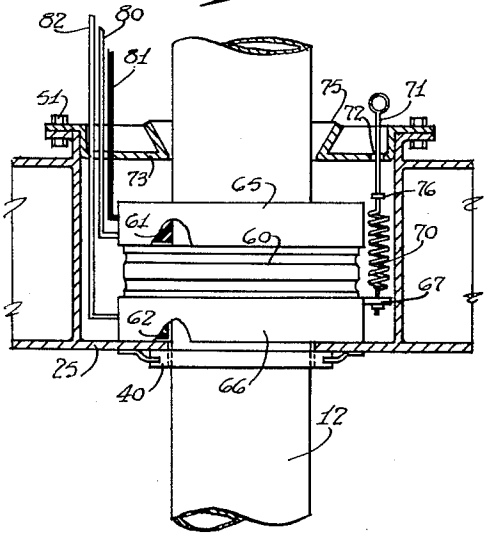

INVENTOR,
Robert W. Pointer

BY

Cushman, Darby & Cushman

ATTORNEYS

Jan. 1, 1957 R. W. POINTER 2,775,869

PLATFORM CONSTRUCTION

Filed April 22, 1952 10 Sheets-Sheet 6

Fig. 15.

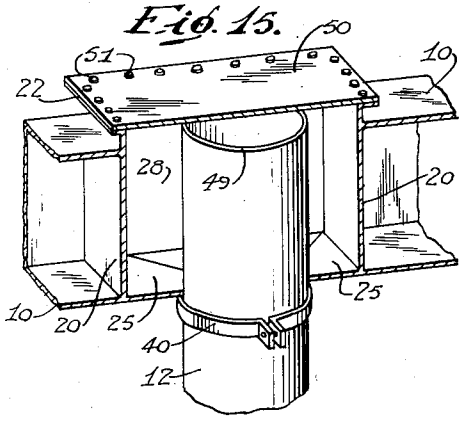

Fig. 16.

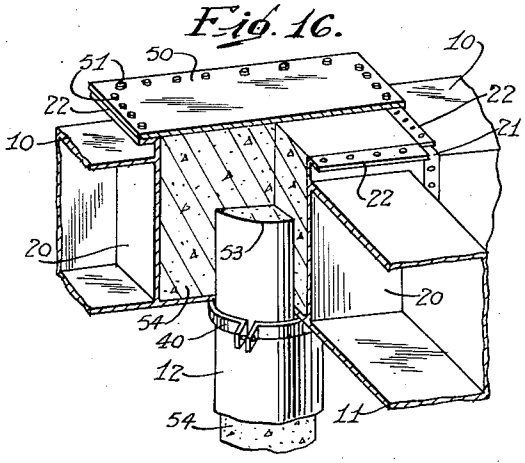

Fig. 17.

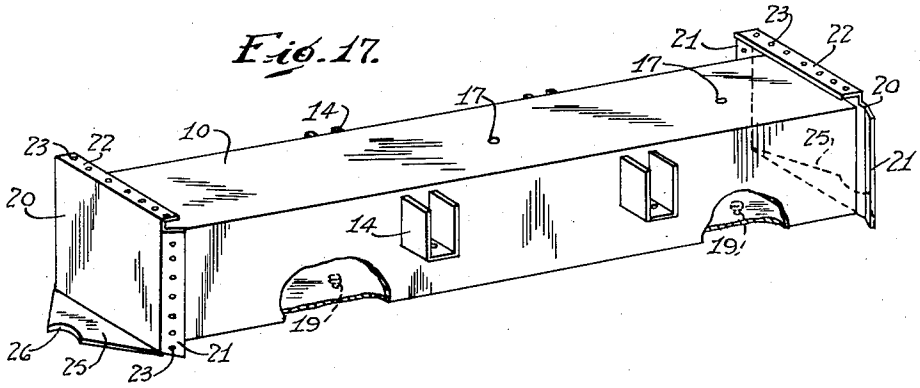

Fig. 18.

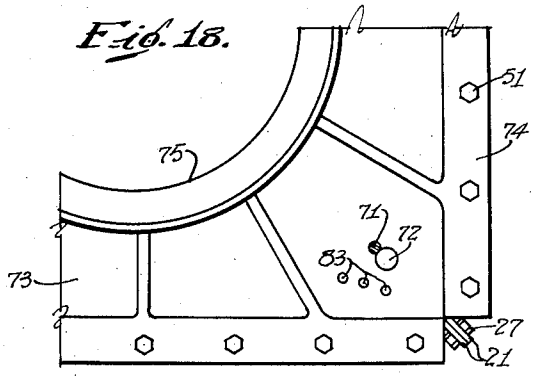

Fig. 19.

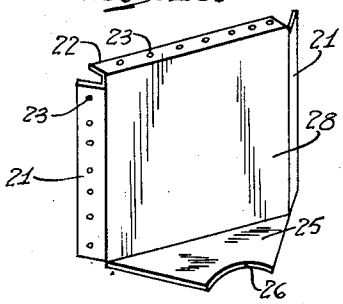

INVENTOR.
Robert W. Pointer
BY
Leuchsman Darby & Leuchsman
ATTORNEYS

Jan. 1, 1957 R. W. POINTER 2,775,869

PLATFORM CONSTRUCTION

Filed April 22, 1952 10 Sheets-Sheet 7

FIG. 21.

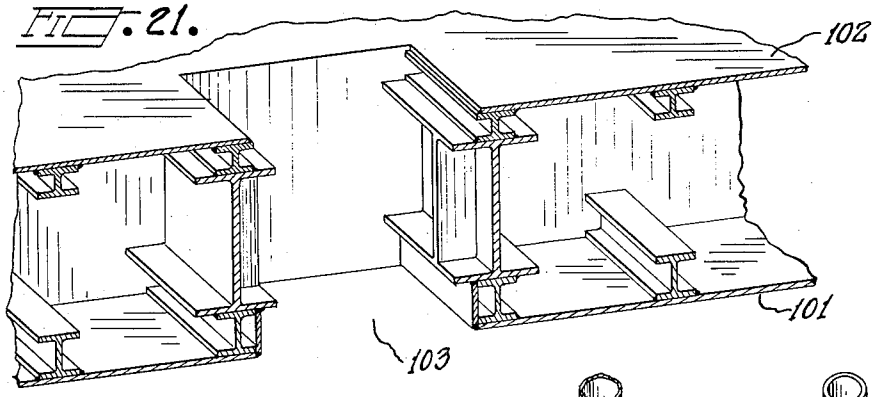

FIG. 20.

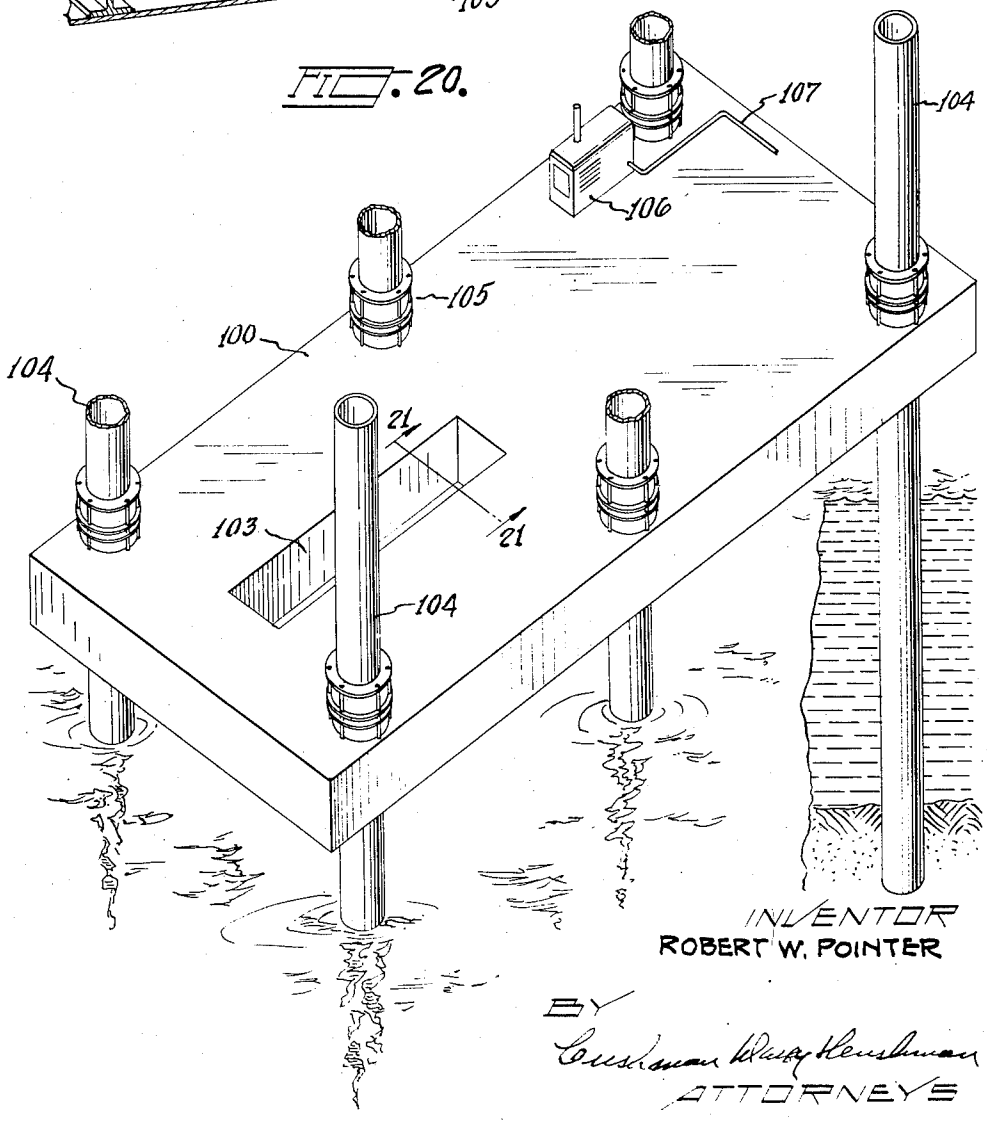

INVENTOR
ROBERT W. POINTER

BY
Cushman Darby & Cushman
ATTORNEYS

Jan. 1, 1957 R. W. POINTER 2,775,869

PLATFORM CONSTRUCTION

Filed April 22, 1952 10 Sheets-Sheet 8

FIG. 22.

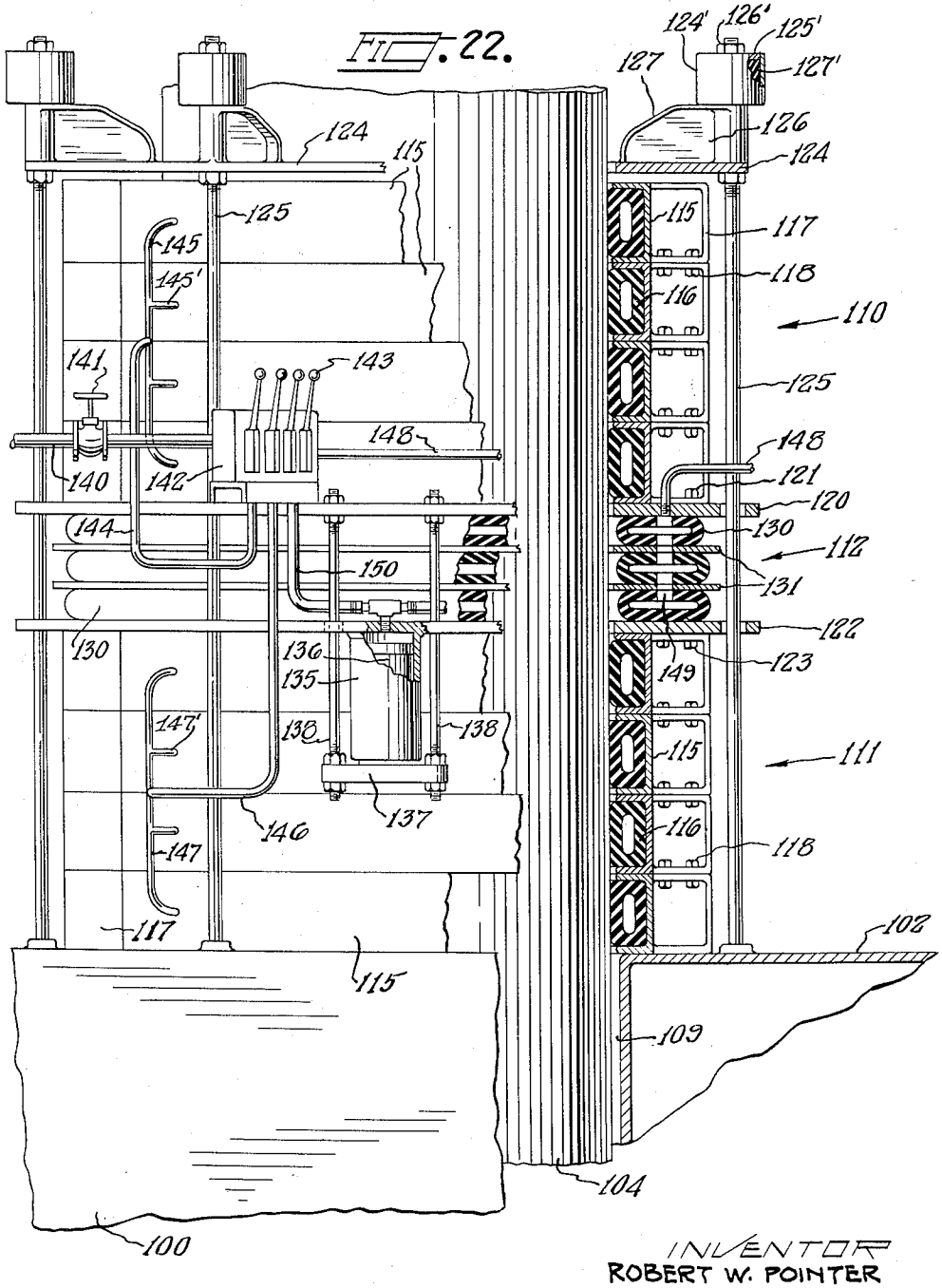

INVENTOR
ROBERT W. POINTER

BY
Cushman Darby & Cushman
ATTORNEYS

Jan. 1, 1957 R. W. POINTER 2,775,869

PLATFORM CONSTRUCTION

Filed April 22, 1952 10 Sheets-Sheet 9

FIG. 23.

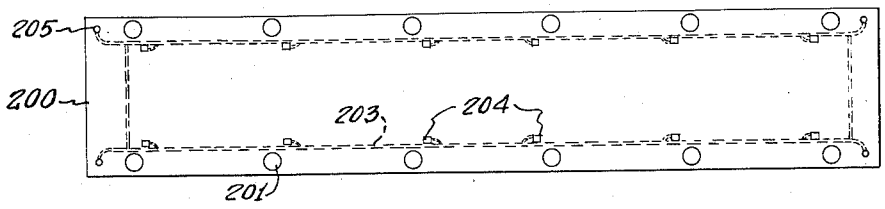

FIG. 24.

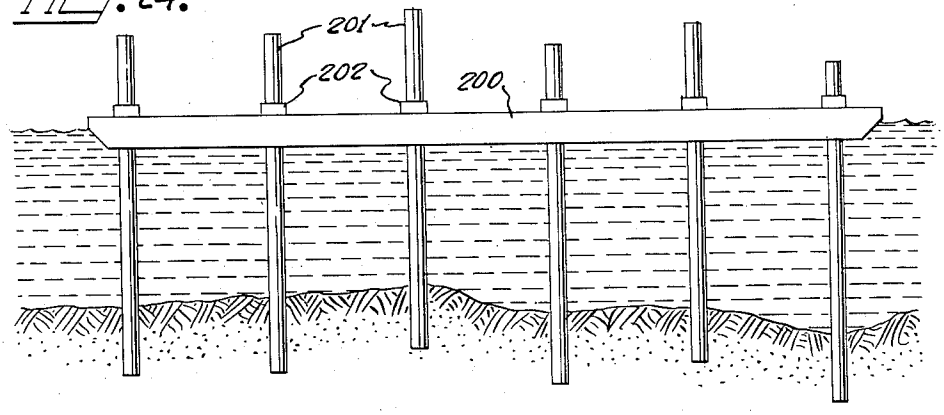

FIG. 25.

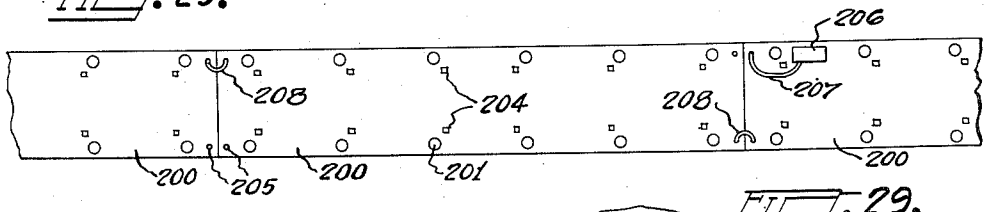

FIG. 26.

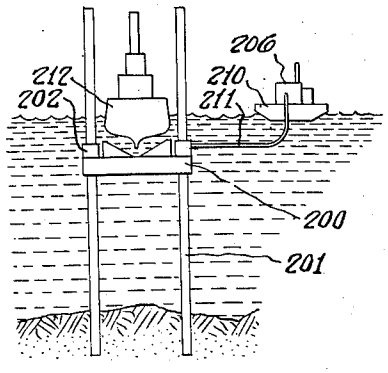

FIG. 29.

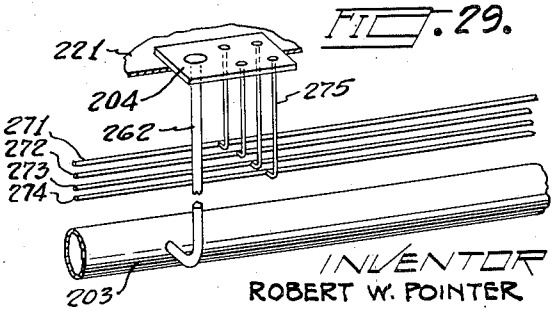

INVENTOR
ROBERT W. POINTER

BY Cushman Darby & Cushman

ATTORNEYS

Jan. 1, 1957 R. W. POINTER 2,775,869

PLATFORM CONSTRUCTION

Filed April 22, 1952 10 Sheets-Sheet 10

FIG. 27.

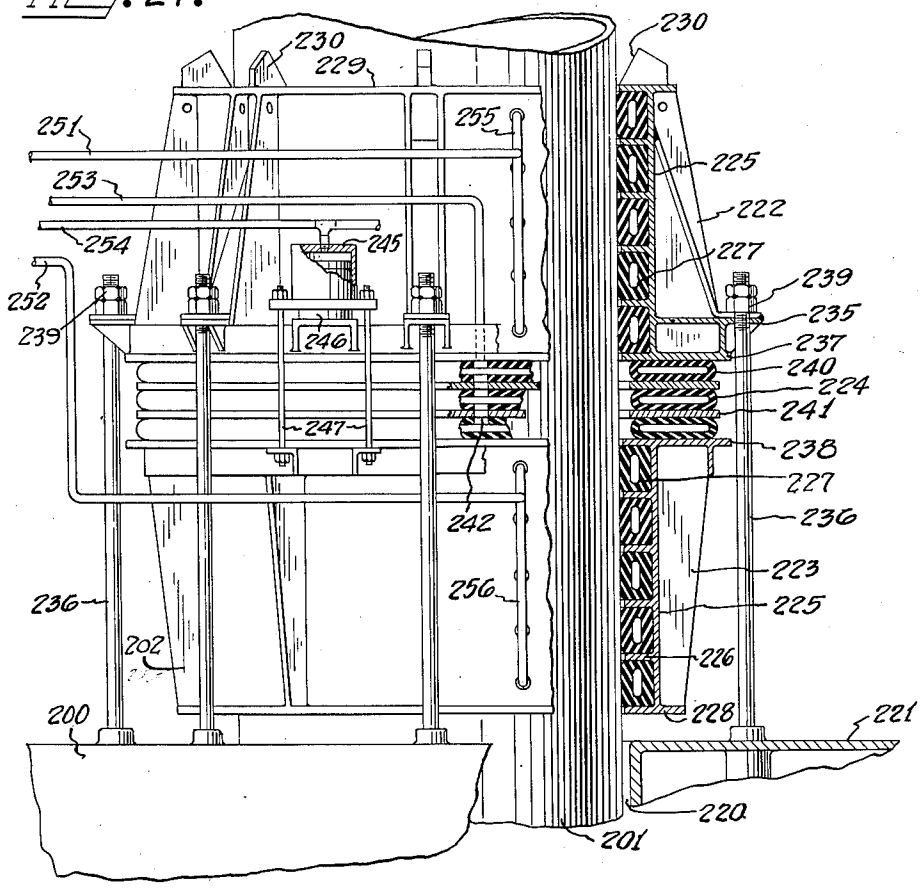

FIG. 28.

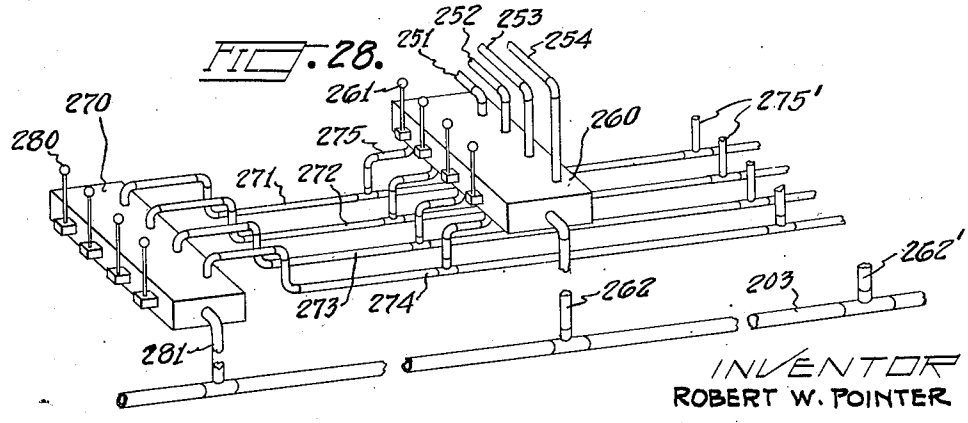

INVENTOR
ROBERT W. POINTER

BY
Leuchman Darby & Leuchman
ATTORNEYS

United States Patent Office 2,775,869 Patented Jan. 1, 1957

2,775,869

PLATFORM CONSTRUCTION

Robert W. Pointer, Portland, Oreg., assignor to L. B. De Long, Seattle, Wash.

Application April 22, 1952, Serial No. 283,567

81 Claims. (Cl. 61—46.5)

This invention relates to structures associated with supporting columns such as caissons and the like, and to the driving of caissons, and has particular reference to a platform construction having caissons or piles to support it.

This application is a continuation-in-part of my copending application Serial No. 143,627, filed February 11, 1950, now abandoned.

General objects of the invention are to provide novel means for gripping a supporting member such as a smooth tubular caisson or pile and to provide novel means cooperating with said gripping means for exerting a powerful steady thrust to produce relative movement between the caisson and some other structure, as for driving the caisson.

A particular object of the invention is to provide an improved form of platform construction for marine use to form an oil well drilling platform, dock or other structure, supported on tubular piles or caissons. More specific objects related to this field of use are the provision of a sectional platform which may be large or small, as required, depending upon the number of units which are connected together, the provision of a platform assembled from buoyant beam members which may be floated into position for connecting together, the provision of a buoyant platform which may be assembled in one place and then floated to the spot where it is to be used, and the provision of novel and compact means incorporated in the platform itself for driving the piles to support the platform on a sea bottom and for raising the platform above the water level, all without the use of the usual elaborate auxiliary equipment such as pile drivers, floating derricks and the like.

An important object of the invention is the provision of novel fluid pressure means to grip the piles and to exert either a driving or lifting action, as may be required, to drive piles, to remove piles, and to raise the platform. It is, accordingly, a further specific object of the invention to provide a novel arrangement of pneumatic thrusting and clamping bellows for exerting powerful thrusting forces which can be controlled in repeating cycles of operation to produce step by step relative longitudinal movement of a caisson or the like.

The foregoing and other objects are accomplished through the use of a thrusting bellows interposed between two clamping bellows which frictionally engage the surface of a pile or caisson. The three bellows are connected with a source of fluid pressure such as a compressed air supply, and the thrusting and clamping actions are controlled by means of individual valves. By operating the valves in a certain sequence, a series of powerful thrusts may be exerted against a caisson or pile to drive it in a step by step movement. In the same way, by exerting a downward thrust against a number of piles in unison, the platform may be lifted in step by step movement to any desired height on the piles. By a different sequence of valve operations, the direction of thrust may be reversed to remove a pile.

Other features of the present construction for marine use comprise the provision of a plurality of buoyant beams and buoyant piles which may be floated into position for assembly directly on the surface of the body of water on which the platform is to be used. The beams are connected to form platform sections in rectangular configuration to extend the platform as required. A pile is disposed at each intersection of longitudinal and transverse beams, and special provision is made for the novel lifting and clamping bellows around each pile. When the platform is assembled it may be towed to the spot where it is to be used, and then the operation of driving the piles may be accomplished entirely by means of the bellows incorporated in the platform, so that the usual heavy pile drivers and other auxiliary equipment may be dispensed with. The only motive power necessary for the different driving and lifting operations is an air compressor which may be driven by an engine carried by the platform. Additional weight for driving the piles may be obtained by filling the hollow beams and also the piles with water. Novel provision is also made for plugging the piles to float them in assembly, and for pumping compressed air beneath the plugs to assist in removing the piles from the sea bottom.

The invention will be better understood with reference to the preferred embodiments described in the following specification and illustrated on the accompanying drawings. It is to be understood, however, that various changes may be made in the construction and arrangement of parts, and that certain features may be used without others, without departing from the spirit of the invention.

In the drawings:

Figure 1 is a plan view of a marine platform embodying the features of the invention;

Figure 2 is a side elevation view of the platform shown in Figure 1;

Figure 3 is a side elevation view, taken approximately on the line 3—3 of Figure 4, showing one manner of assembling the platform;

Figure 4 is a fragmentary top plan view, taken approximately on the line 4—4 of Figure 3;

Figure 5 is a side elevation view showing the assembled platform floating in the water;

Figure 6 is an enlarged vertical sectional view taken on the line 6—6 of Figure 1;

Figures 7 to 12 illustrate the action of the clamping and driving bellows of the pneumatic jack in a complete cycle of steps in the operation of driving a pile;

Figures 13 and 14 illustrate the action of the bellows in the steps required to remove a pile;

Figure 15 illustrates a manner in which the piles may be cut off and capped for a semi-permanent installation;

Figure 16 shows a pile filled with concrete and capped for a permanent installation;

Figure 17 is a perspective view of one of the hollow beams of the platform;

Figure 18 is a fragmentary top plan view of a portion of the structure shown in Figure 6;

Figure 19 is a perspective view of a combined end and quadrant plate for the ends of the platform beams;

Figure 20 is a perspective view of an oil well drilling barge embodying the principles of the invention;

Figure 21 is a fragmentary sectional view taken on the line 21—21 of Figure 20;

Figure 22 is a view, partly in section, showing the construction of one of the jack units in the barge of Figure 20;

Figure 23 is a plan view of a dock barge embodying the principles of the invention;

Figure 24 is a side elevation view of the barge shown in Figure 23;

Figure 25 is a plan view of a dock formed from a plurality of the barges shown in Figure 23;

Figure 26 is a view showing the use of the barge of Figures 23 and 24 as a temporary dry dock;

Figure 27 is a view, partly in section, showing the construction of one of the jack units employed in the barge of Figures 23 and 24;

Figure 28 is a schematic view of the piping arrangement for operating a plurality of the gripper units shown in Figure 27;

Figure 29 is a fragmentary perspective view showing the arrangement of outlet connections for the gripper units in the piping installation in the barge of Figures 23 and 24.

General construction

Referring first to Figure 1, it will be seen that the framework of the platform comprises a plurality of longitudinal and transverse beams **10** and **11** which are connected together in a rectangular grid pattern to make a platform of the required size. The present platform employs twelve of the beams **10** and **11**, but a smaller number of these beams may be used to make a small platform and a larger number of the same beams may be used to extend the platform. At each intersection of the beams **10** and **11**, the platform is supported upon a tubular steel caisson or pile **12**. Surrounding each pile and contained within the thickness of the platform beams is a pneumatic jack or expansible lifting assembly, designated in its entirety by the numeral **13** in Figure 6. By means of this pneumatic jack, each pile may be driven into the sea bottom, and also by operating a number of the jacks in unison, the whole platform may be raised on the piling to any desired elevation above the water, as shown in Figure 2.

The beams **10** are equipped with hangers **14** for joists **15** to support deck planking **16**. When the platform is to be used for a well drilling operation, the usual superstructure may be erected for drilling purposes.

Each beam **10** and **11** is of hollow box type construction and constitutes an air- and water-tight tank. The top sides of the beams are equipped with openings **17** and the bottom sides have openings **18** which may be closed by plugs **19**. With the use of suitable air or water pumping equipment the beams may be filled with water to make them heavy, or filled with air to make them buoyant, as the situation may require. When the beams are above water level, they may be filled by pumping water in through the top openings **17** and emptied by removing plugs **19**. In situations where the platform might be used below the surface of the water, the beams may be made buoyant to raise the platform by removing the plugs **19** and inserting the ends of compressed air hoses to fill the beams with air and displace the water.

The ends of the beams are closed by plates **20** having vertical flanges **21**, set at a 45 degree angle, and horizontal top flanges **22**, these flanges being provided with bolt holes **23**. The bottom sheet of each beam has an end portion **25** extending beyond the end plate **20** and having an arcuate edge **26** at its extremity to fit the curvature of pile **12**. The side edges of the plates **25** are cut at 90 degree angles so that four beams may be brought together to fit around a pile, as shown in Figure 4, with the four quadrant plates **25** forming a guide for the pile. The beams are then fastened together by means of bolts **27**, Figure 18, through the flanges **21**. Figure 19 shows a plate **28** having flanges **21** and **22** and a quadrant plate **25**, to take the place of a plate **20** where there is no beam end.

All the beams may first be connected together in this manner to form the complete platform, and then the piles **12** subsequently dropped through the holes formed by the arcuate edges **26**, or, by floating or suspending the piles in vertical positions so that they are capable of lateral movement, the beams may be assembled around the piles, as shown in Figure 4. A feature of the present construction is the use of buoyant tanks for platform beams, so that they may be floated into position for connecting together, either with or without the piles in place at the time the connections are made.

Assembly

Figure 6 illustrates the application of a pneumatic plug **30** which is inserted in the tubular pile to provide a convenient grip for handling the pile and to enable the pile to be filled with water to make it heavy, or filled with air to make it buoyant. The plug **30** comprises a rigid cylindrical tank having a pair of rim flanges **31** to confine a hollow circular pneumatic tube **32**. When the tube **32** is inflated by means of air hose **33**, it expands to grip the inside of the pile, so that the pile may be lifted and handled by a cable **34** attached to a lifting eye in the center of the plug. When the air pressure is released from the tube **32**, it relaxes to the size shown to release its grip on the pile and slide freely therewithin. The top wall of the tank of plug **30** is equipped with a connection for a second compressed air hose **35**, and the bottom wall contains an opening equipped with a check valve **36**.

By positioning the plug **30** near the lower end of the pile and then lowering the pile into the water by cable **34**, the pile will float vertically as shown in Figure 3. In this use of the plug it is not necessary to supply compressed air through the hose **35**, as the check valve **36** and the inflated tube **32** form a water-tight seal. After the tube **32** has been inflated, the supply hose **33** may be shut off by a suitable valve and both hoses disconnected from the air supply, so that the freedom of movement of the pile will not be limited by the length of the air hoses during assembly of the platform. For convenience, the cable **34** may have an eye at sufficient length to hang over the upper end of the pile, the air hoses **33** and **35** being of about the same length and equipped with suitable couplings for disconnection. A valve in the coupling of hose **33** maintains the tube **32** inflated after the hose is disconnected.

After the platform has been assembled by the most convenient method, it will float as shown in Figure 5 and may thus be towed to the location where the piles are to be driven. The buoyancy of the beams **10** and **11** is sufficient to float the platform without the use of the plugs **30** in the piles, but, if additional buoyancy is required to carry equipment on the platform, the plugs **30** may be inserted to increase the displacement of the whole assembly. In a 21 inch steel pile, for example, an additional buoyant force of one ton will be developed for each fifteen and one-half feet of submerged length which is filled with air. Hence, in the illustrated embodiment utilizing nine piles and assuming that the water is deep enough to allow the piles to be submerged to a depth of fifteen and one-half feet above their plugs **30**, an additional deck load of nine tons of machinery and equipment can be carried by the floating platform without the use of any auxiliary buoyancy tanks that are not essential structural members of the platform.

When the platform is floated as a barge, the piles are secured temporarily against vertical movement in the platform by means of semicircular clamp members **40** shown in Figure 6. These members are hinged on a pin **41** in a bracket **42** on the bottom sides of the beam, and have ears **43** which are adapted to be bolted together by a bolt **44** to grip the piling securely. When these clamps are not in use, the bolts **44** are loosened and the clamp members are held in position by a clip **45** which projects into notches **46** in the ears **43**.

In a temporary installation, after driving the piles, the top of each pile may be cut off at **49** on a level with the flanges **22** and the joint at the intersection of the beams capped with a plate **50** as shown in Figure 15. The plate **50** is secured to the various flanges **22** by means of bolts **51** and bears upon the top end of the

pile to support the platform. It will be observed in Figure 2 that the plate **50** is level with the deck planking **16** so as to leave the deck of the platform free and clear of obstructions. When the platform is thus supported by the plate **50**, the clamp **40** is no longer necessary.

Figure **16** illustrates a permanent installation. Here the top of the pile has been cut off at **53** considerably below the level of flanges **22** and the pile, as well as the space between the plates **20** and **28**, filled with concrete **54**. The cap plate **50** is employed as before to support the platform, making the clamp device **40** unnecessary after the concrete has set.

Pneumatic jack

The construction of the pneumatic jack **13** is shown in Figure 6, wherein the space between the end plates **20** is designated as a chamber **55** which contains the jack. Essentially, the jack comprises a lifting, or thrusting, bellows **60**, an upper clamping tube **61**, and a lower clamping tube **62**, all being of annular shape to encircle a cylindrical pile or column. In Figure 6, the upper clamping tube **61** is shown in relaxed condition with a small clearance between it and the pile **12**, and the lower clamping tube **62** is shown expanded to grip the pile. The lifting bellows **60** is deflated and collapsed. When compressed air is admitted to the bellows **60** it expands several inches in a vertical direction to move the clamping tubes **61** and **62** apart. The clamping tubes are preferably equipped with a flexible rib tread, not shown, capable of transmitting a tremendous thrusting force to the pile without slipping.

It will be apparent to persons skilled in the art that the lifting bellows and clamping tubes may be made and assembled in different ways, for expansion by either liquid or gaseous media, but in the illustrated embodiment the expansible members are designed for pneumatic inflation. The lifting bellows **60** has an upper surface bonded to an annular plate **63** and a lower surface bonded to an annular plate **64**, these plates having an inside diameter to fit loosely over the pile and an outside diameter to fit within the chamber **55**. This bellows comprises a plurality of flexible annular tubes having common adjoining walls and interconnecting air passages for equalization of the pressure in all the tubes. When the tubes are inflated with compressed air the bellows expands in a vertical direction thrusting the plates **63** and **64** farther apart. The upper clamping tube **61** is bonded to the inner cylindrical surface of an annular ring **65** of hollow box construction, and the lower clamping tube **62** is bonded to a similar ring **66**.

The lower ring **66** is equipped with a plurality of ears **67**, each connected with a spring **70** having a lifting handle **71** on its upper end. Each handle **71** extends through a keyhole slot **72** in a square top plate **73** and is equipped with a collar **76** of a size which will pass freely through the large end of keyhole slot **72** but which will not pass through the small end of the slot. Thus, when the collars **76** are engaged above the plates **73**, as shown in Figure 6, the lower ring **66** is raised by the springs **70** to collapse the lifting bellows **60** whenever its air supply is cut off and its internal pressure reduced to atmospheric. When the collars **76** are dropped through the large ends of slots **72**, the lower clamping ring is free to drop by gravity.

Plate **73** has a horizontal rim flange **74** which is bolted to the flanges **22** by means of bolts **51** to close the top of chamber **55** around the pile. Plate **73** also has a circular hole loosely fitting around the pile and forming an upper guide in vertical alignment with the lower guide **25**, **26** to hold the pile vertical. A sloping flange **75** is provided around the central hole in plate **73** to facilitate insertion of the pile after the platform is assembled and this plate has been bolted in place, when such mode of assembly is more convenient than that shown in Figures 3 and 4.

It will be seen that the disposition of the jack **13** within the chamber **55**, wherein considerable clearance exists between the jack and the side walls of the chamber and there is no rigid connection therebetween, establishes a degree of freedom of movement of the jack which enables it to move to a limited extent transversely of the chamber and also to cant to a limited extent relative to the platform formed by the beams. Such freedom of movement enables the jack **13** to accommodate itself to limited transverse or canting movements of the pile **12** occasioned by the loose mounting of the latter in the guiding hole in the plate **73** and the hole formed by the edges **26** of the plates **25**. Thus, the jack **13** can effect relative vertical movement between the platform and the pile without binding against the latter.

The lifting bellows **60** and the two clamp tubes **61** and **62** are equipped with fittings **77** and **78** to make connection with the three air hoses **80**, **81** and **82** which pass through holes **83** in the plate **73** as shown in Figures 6 and 18. Compressed air is supplied through a manifold **85** and controlled by the individual valves **35V**, **33V**, **80V**, **81V** and **82V** to connect with the corresponding air hoses as shown. In the particular phase of operation illustrated in Figure 6, the first four valves are turned off to deflate and relax the tubes **32**, **61** and bellows **60**. In its off position, each valve bleeds its hose down to atmospheric pressure. The valve **82V** is shown open and the lower clamping tube **62** is expanded into firm gripping engagement with the pile **12**.

Operation

Figures 7 to 12 illustrate a sequence of steps constituting a cycle in a pile driving or platform lifting operation. In these figures the air hoses shown in double lines are open to atmospheric pressure to allow the bellows or clamping tubes connected therewith to collapse, and the hoses shown in solid black lines are connected with the air pressure supply **85** to inflate the bellows or clamping tube connected therewith. Preparatory to lifting the platform and driving the piles, the piles are first dropped to engage the sea bottom, the absence of the bolt **44** from clamping members **40** indicating that the clamp is loose on the pile to allow it to slide freely therethrough. The spring handles **71** are first raised and the collars **76** engaged above plate **73** to collapse the bellows **60** and hold the lower ring **66** in its raised position with upper ring **65** engaging the underside of the plate **73** as shown in Figure 7. Hoses **80** and **81** are open to atmospheric pressure and valve **82V** is opened to supply air pressure to hose **82**, thereby duplicating the condition illustrated in Figure 6.

Valve **80V** is then opened to admit air pressure through pipe **80** and fitting **77** to the several tubes of bellows **60** as indicated in Figure 8, and the bellows **60** is thereby expanded in a vertical direction to act as a pneumatic jack and move the rings **65** and **66** farther apart. The thrust of bellows **60** reacts downwardly on the pile and upwardly on the platform and so it will be understood that this thrust may be utilized to lift the platform by the same series of operations which will first be described in connection with the driving of the piles. The driving action is preferably applied to one pile at a time, and, hence, a considerable part of the weight of the whole platform may be brought to bear upon the one pile when the bellows **60** expands. This weight may be increased, if necessary, by filling all the beams **10** and **11** and also the piles with water, with plugs **30** secured in the piles. The upper clamping tube **61** being relaxed and clamp members **40** being loosened, expansion of the bellows **60** pushes the pile **12** downward and the platform upward to the new relative positions shown in Figure 8 where bellows **60** has expanded to its limit.

The next step is to open the valve **81V** to admit air pressure to hose **81** and cause the upper clamping tube **61** to grip the pile in its new relative position, as shown in Figure 9. Next, the air pressure is released from hose

82, as shown in Figure 10, and then also from hose 80 as shown in Figure 11, allowing the springs 70 to draw the bottom ring 66 with its now relaxed tube 62 to raised position. The platform is then supported directly upon the top ring 65. Compressed air is then admitted to hose 82 as indicated in Figure 12, and finally, with the release of air pressure from hose 81, the parts are returned to the initial condition shown in Figure 7 with support of the platform transferred to bottom ring 66. By repeating this cycle, the pile is driven step by step, several inches at a stroke, to the desired depth. The tube 32 may be inflated with the plug 30 near the lower end of the pile, and then the pile may be pumped full of water to add considerable weight to assist in driving the pile.

The driving technique may be adapted to the condition encountered in a particular installation. If the center pile is driven first, substantially the entire weight of the platform, including the water in the beam tanks and piles if these are filled, may be brought to bear to assist the driving. If one of the outside piles is driven first, nearly half the weight of the platform may be brought to bear upon it to furnish the driving force, or weight. It is not necessary to complete the driving of the first one or two piles before the others are started, but, preferably, the partially driven piles are utilized as soon as they appear to be anchored in the bottom to assist in holding the platform down while the remaining piles are driven. Then the completion of the driving of the first one or two piles may be accomplished later, after all the other piles are available to resist the upward reaction.

All the piles may be driven by a single pneumatic jack 13 by shifting the jack from one pile to another. The jack is transferred by merely removing bolts 51 and lifting the plate 73 and jack mechanism out of chamber 55.

In the present embodiment, wherein the drawings are made approximately to scale to illustrate a specific apparatus designed for 21 inch piles and an air pressure supply at 200 pounds per square inch, the bellows 60 is capable of exerting a lifting force, or driving push, of 75 tons. The maximum thrust of the bellows, of course, cannot be applied to the first pile to be driven unless the platform has sufficient weight, but as soon as some or all of the piles are partially driven, the full 75 tons can be applied.

It will be evident that if pneumatic jacks are installed on all the piles and operated in unison, the whole platform may be lifted bodily to any height above the water as shown in Figure 2 and it is advantageous to do this before the piles are driven, rather than after. Using the data of the preceding paragraph, it will be seen that the present nine jacks will lift a weight of platform and equipment equal to 675 tons, if necessary. In marine use it is usually desired to raise the platform at least above the wave action at high tide.

The action of the pneumatic jack is also reversible for removing piles. In Figure 13 it will be observed that the clamp members 40 are still in loosened condition, as indicated by the absence of bolts 44, and that the spring handles 71 have been shifted to the large ends of the keyhole slots 72 to permit the collars 76 to pass through plate 73 and drop the lower rings 66 down to the bottom abutment plates 25. To lift the pile, compressed air is first introduced into the hose 81 to inflate the top clamping tube 61, as shown. Then, when compressed air is admitted to the hose 80 to expand the bellows 60, the ring 65 is lifted to raise the pile to the position shown in Figure 14.

As long as the pile being removed is still supported by the sea bottom, it is not necessary to inflate the bottom clamping tube 62, and the lifting cycle is completed merely by turning off the compressed air and opening both hoses 80 and 81 to atmosphere to allow the top ring 65 to drop down for a new grip on the pile. One pile is removed at a time in this manner while the others support the platform. In this operation, the full lifting force of bellows 60 may be exerted upon each pile in turn because the downward reaction is distributed over the other eight piles which are capable of supporting the platform even after they have been pulled out of their embedded positions and are merely resting on the bottom.

After all the piles have been pulled out of the mud, they may be lifted clear of the bottom by utilizing the lower clamping tube 62 in conjunction with the tube 61 and bellows 60. At this stage the next step after Figure 14 is to admit compressed air to hose 82, then open hoses 80 and 81 to atmosphere to allow the top ring 65 to drop, then admit pressure to hose 81, and finally open hose 82 to atmosphere which would complete the cycle back to the starting position shown in Figure 13 without releasing the pile to slip back.

To assist in removing the pile from the sea bottom, the tube 32 is inflated and compressed air is supplied through hose 35. This air passes through check valve 36 and the pressure developed beneath the plug exerts an upward reaction on the pile. An air pressure of 200 pounds per square inch thus applied in a 21 inch diameter pile can exert a lifting force of over three tons and, in addition, this air pressure tends to force water around the bottom edge of the pile and loosen the mud or clay in which it is embedded to make withdrawal easier. In Figure 14 compressed air would then be admitted to both hoses 33 and 35 to expand the tube 32 against the inside surface of the pile and to develop a lifting pressure on the bottom area of the plug.

Figures 20, 21 and 22 illustrate the construction of an oil well drilling barge for off-shore drilling operations and constructed in accordance with the present invention. This barge has been built and tested using six foot diameter steel piles. The barge 100 is fabricated of girders, beams and steel plates to form a buoyant hull which may be towed to the site of erection. Thus, the bottom plates 101 and deck plates 102, together with the side and end plates, form a large buoyancy chamber which may be compartmented and fitted with tanks and other equipment, as required for the intended purpose. The barge is provided with a well or opening 103 for the drilling rig and well casings.

When the barge has arrived at the site of erection, hollow, cylindrical sheet steel piles or other suitable supporting members 104 are inserted through fluid pressure operated jack units, designated generally by the numeral 105 (Figure 20) until they rest on the sea bottom. Numeral 106 designates an air compressor unit connected with an air pressure supply pipe 107 for operating the jack units 105 to raise the barge to form a working platform above the wave action. After elevation of the barge to a suitable height above the water the jack units 105 may be operated one after another to drive the piles into the sea bottom sufficiently to stabilize the platform and support the drilling equipment (not shown). The jack units 105 do not interfere with the use of a conventional pile driver, which may be employed or not, as desired.

Whenever it is desired to move the platform, the operation of the jack units 105 is reversed to pull instead of drive the piles, and when the piles are all removed the platform again becomes a barge which floats freely on the water by its own buoyancy.

Figure 22 illustrates the construction of one of the jack units 105 shown in Figure 20. The barge 100 is equipped with a circular well or opening 109 for each pile 104, the well extending entirely through the barge from deck plate to bottom plate and serving as a guide to hold the pile in vertical position, as well as a wall to make the barge water-tight. Each jack unit comprises an upper gripper assembly 110, a lower gripper assembly 111, and an intermediate vertically expansible lifting bag assembly 112.

Each gripper assembly 110 and 111 preferably com-

prises a stack of annular steel channels **115** containing inflatable tubular rubber rings or elastic expansible resilient members **116**. The rubber rings **116** have a generally rectangular cross section to fit the channels **115**, whereby, when the rings are inflated, preferably with air, they cannot expand in any direction except inwardly or laterally against the outer surface of the cylindrical pile **104** to apply a constrictive resilient grip with uniform radially directed pressure around the entire circumference of the pile. When the rubber rings **116** are deflated by exhausting them to atmospheric pressure, they contract back into their channels **115** sufficiently to provide a slipping clearance for relatively free axial movement of each pile or supporting member.

The annular steel channels **115** are equipped with radially projecting ears **117** by which all the channels of each gripper assembly may be bolted together as a unit by means of bolts **118**. The lowermost channel **115** of the upper gripper assembly is bolted to a flat annular thrust plate **120** by bolts **121**, and the uppermost channel **115** of the lower gripper assembly is similarly connected to a flat annular thrust plate **122** by bolts **123**, whereby the plate **120** becomes a part of the upper gripper assembly and the plate **122** becomes a part of the lower gripper assembly. The lower gripper assembly is shown resting on the deck plate **102** and indirectly supporting the upper gripper assembly, and it is to be understood that both gripper assemblies have freedom for limited vertical movement on the pile with respect to the deck plate **102**. The deck plate **102** provides an abutment to limit the downward movement of the lower gripper assembly, and a top annular abutment plate **124** limits the upward movement of the upper gripper assembly. The upper abutment plate **124** is anchored to the barge by a plurality of long vertical rods **125** to allow the desired vertical movement of the gripper assemblies. The rod **125** extends slidably through the plate **124** and coaxially and slidably through cup-like elements **124'** integral therewith. A washer **125'** secured on the upper end of each rod **125** by a nut **126'** bears against an annular resilient member **127**, of rubber or the like, within each element **124'** to cushion the abutment plate **124**. Abutment plate **124** is buttressed by an inwardly directed member **126** at each rod, having a sloping guide surface **127** to guide the lower end of the pile into the upper gripper assembly in erection. It again will be noted that the rods **125** extend loosely through oversize apertures in the plates **120** and **122** to permit, to a limited extent, both lateral and canting movements of the gripper assemblies relative to the well **109**.

Interposed between the thrust plates **120** and **122** is a sandwich of vertically expansible tubular rubber lifting rings or bags **130** separated by flat annular retainer plates **131**, which sandwich constitutes the vertically expansible lifting assembly **112**. The lifting bags **130** and the rubber gripping rings **116** collapse to substantially flat condition when deflated to atmospheric pressure so as to be free from engagement with the pile **104** and allow axial movement thereof. In Figure 22 the lifting bags **130** are partially inflated, and the gripping rings **116** are fully inflated, to best illustrate their shapes and mode of operation. Ordinarily, the upper and lower gripper assemblies would not both be inflated at the same time.

Fluid pressure operated means are also provided for moving the upper and lower gripper assemblies toward each other to compress the bags **130**. A cylinder **135** is mounted on the lower thrust plate **122** and has a piston **136** connected with a yoke or cross head **137**. A pair of tension rods **138** are connected at their lower ends to the yoke **137** and at their upper ends to the upper thrust plate **120**, whereby the admission of fluid pressure in cylinder **135** above the piston tends to pull the upper plate **120** downward and push the lower plate **122** upward to squeeze the air bags **130** and insure complete deflation thereof to obtain a full stroke in each operating cycle.

The fluid pressure operated members are actuated from a supply pipe **140** equipped with a shut-off valve **141** and connected with supply pipe **107** in Figure 20. Supply pipe **140** connects with a control valve assembly **142** having four manual control levers **143**. Each of the control levers **143** operates a three-position valve having one position for admitting fluid pressure from supply pipe **140** to the tubular member to be expanded, one position to close the valve and hold the pressure, and a third position to close the valve on the supply side and open the valve on the side connected with the expansible tube to deflate the tube to atmospheric pressure, as will be readily understood by persons skilled in the art. Thus, a pipe **144** connects one of the control valves with a manifold **145** having spaced branched tubular arms **145'** each communicating with a rubber ring **116** of the upper gripper assembly **110**. Similarly, a pipe **146** connects a second one of the control valves with a manifold **147** having spaced tubular arms **147'** each leading to a rubber ring **116** of the lower gripper assembly **111**. A pipe **148** leads from a third control valve to a connection in the plate **120** communicating with the lifting bags **130**. These bags and the annular separating plates **131** are equipped with registering apertures at **149** and suitable fittings, not shown, for equalizing the pressure in all the bags **130**. A pipe **150** leads from the fourth control valve to the cylinder **135**. It is to be understood that the pipe **148** may make connection with the ring **120** and lifting bags **130** at a number of different points around the pile, and that, likewise, a number of the manifolds **145** and **147** may be provided to introduce air simultaneously at different points around the gripping rings **116**. Also, a plurality of the cylinders **135** are preferably employed to draw the thrust plates and gripper assemblies together evenly on all sides of the pile or cylindrical supporting member **104**. The so-called pipes **140**, **144**, **146**, **148** and **150** are, of course, flexible and of such length to accommodate movement of the parts.

In Figure 22, if the lower gripper assembly **111** is released by exhausting the lower rings **116** to atmosphere, and the rings **116** of the upper gripper assembly are inflated to grip the pile, then the pile will be pulled upwardly relative to the barge as the lifting bags **130** expand in a vertical direction. The limit of the vertical expansion is reached when the uppermost channel **115** of the upper gripper assembly engages the top abutment plate **124**. The parts are returned to starting position for another lifting stroke by admitting compressed air to the lower gripper assembly **111** and venting the upper gripper assembly **110** and lifting assembly **112** to atmosphere, and then admitting fluid pressure to cylinders **135** to deflate and flatten the lifting bags **130**.

The pile is driven by first raising the lower gripper assembly as far as possible, and then admitting fluid pressure thereto to clamp on the pile in a high position. Then, when fluid pressure is admitted to the lifting bags **130** with the upper gripper assembly released, the pile will be thrust downwardly if the barge is restrained from rising. If the pneumatic jacks are operated simultaneously in this manner on all the piles, the barge will be lifted bodily, until the limit of the stroke is reached by the bottom channel **115** of the lower gripper assembly engaging the deck plate **102**. To return the parts to starting position for each new cycle, fluid pressure is then admitted to upper gripper assembly **110** and cylinder **135**, and released from lower gripper assembly **111** and lifting bags **130**, whereupon the lower gripper assembly is lifted to get as high a new grip as possible on the pile for the next thrust.

The sequence of operations for driving and pulling

piles or other suitable supporting members and their associated parts is the same as illustrated in Figures 7–14.

In the modification disclosed in Figures 23 and 24, there is shown a long, narrow dock barge **200** having a number of hollow cylindrical steel piles **201** for stabilizing and supporting the structure on the sea bottom. Fluid pressure operated jacks **202** are capable of lifting the barge out of the water, driving the piles, submerging the barge beneath the water, and pulling the piles.

Figure 25 illustrates how a number of such barges may be positioned and connected end to end to form a temporary dock of any desired length. These barges are equipped with pressure supply pipes **203**, Figure 23, extending entirely around the barge and having outlet connections **204** at stations adjacent each pile for hose connections to operate the lifting jacks on the piles or supporting members. Other pressure supply connections **205** at the ends of the barges provide for connection with an air compressor **206** by means of hose **207**, and interconnections between adjacent barges by means of hose connections **208** whereby a single air compressor unit may supply the necessary operating fluid pressure for the pile jacks of all the barges. By connecting the air supply systems together in this manner, a single large air compressor unit may be stationed wherever convenient and out of the way along a dock, or a plurality of smaller air compressor units may be employed in any number as required.

Figure 26 illustrates the use of the dock barge **200** as a temporary dry dock for ship repair and the like, where there are no conventional dry dock facilities. After driving the piles **201**, the barge **200** may be flooded and lowered on the piles so that a ship to be dry-docked may be floated over the barge between the piles. This may be accomplished by mounting the air compressor **206** and control mechanism on a small floating barge or ship **210** which is connected with the piping and control systems of the barge **200** by means of connecting hoses **211**. Then, when the barge **200** is raised out of water by jacks **202**, it raises the ship **212** along with it to perform the function of a dry dock. In this operation, the lifting effort of the jacks **202** may be assisted by pumping air into the flooded barge **200** to restore its natural buoyancy.

Figure 27 illustrates the construction of the jack units **202**. The barge **200** is equipped with cylindrical well **220** extending from the deck plate **221** through the bottom plate of the barge to serve as a guide for each of the piles **201**. Each jack unit comprises an upper gripper assembly **222**, a lower gripper assembly **223**, and an interposed lifting assembly **224**. Each gripper assembly comprises a cylindrical steel plate **225** having a plurality of inwardly directed horizontal vertically spaced flanges **226** defining channels for radially and inwardly expansible tubular rubber gripping rings or resilient inflatable members **227**. The flanges **226** provide a circular opening slightly larger than the pile to provide the necessary clearance for relative movement, and the rubber rings **227** contract away from the pile to maintain approximately the same clearance when they are deflated to atmospheric pressure. The lower edge of the lower gripper assembly comprises a flat annular plate **228** to engage the deck plates **221** in the lower position of this gripper assembly. A flat annular plate **229** on the upper end of the upper gripper assembly is equipped with a plurality of upstanding circumferentially spaced guide plates **230** with inwardly sloping edges to guide the lower end of the pile **201** into the upper gripper assembly when inserting the pile into the well or other suitable opening **220**.

The upper gripper assembly **222** carries a plurality of ears **235** which are apertured to slide on tension bolts or rods **236** anchored at their lower ends to the barge. The lower end of the upper gripper assembly is faced with a flat annular thrust plate **237**, and the upper end of the lower gripper assembly is faced with a similar thrust plate **238** between which is confined the vertically expansible lifting assemlby **224**. Nuts **239** on the rods **236** constitute abutments to limit the upward movement of the upper gripper assembly relative to the barge.

The lifting assembly **224** comprises a plurality of annular rubber tubes or bags **240** separated by flat retainer plates **241**. These tubes and plates have registering apertures **242** equipped with suitable fittings, not shown, to equalize the pressure in the several tubes.

The upper and lower gripping units are drawn together by the action of a plurality of cylinders **245**. Each cylinder **245** contains a piston **246** mounted on the plate **237**. A pair of tension rods **247** are connected at their lower ends with thrust plate **238** of the lower gripper assembly and at their upper ends with cylinder **245**. When fluid pressure is admitted into cylinder **245** above the piston **246**, the cylinder is thrust upwardly to draw the thrust plates **237** and **238** together and squeeze or compress the collapsible tubes **240** of the lifting assembly.

By reason of the above described form of construction in Figure 27, the upper and lower gripper assemblies have relative vertical movement, and both of these assemblies are movable relative to the deck plates **221** to the extent permitted by the stop nuts **239** on the rods **236**.

The fluid pressure requirements of the jack unit **202** are supplied by four pipes **251**, **252**, **253** and **254**. Pipe **251** connects with a manifold **255** communicating with all the inflatable tubes **227** of the upper gripper assembly **222**, and pipe **252** connects with a manifold **256** communicating with all the inflatable tubes of the lower gripper assembly **223**. Pipe **253** connects with the tubes **240** of the lifting assembly, and pipe **254** connects with the cylinders **245**. Figure 27 shows the connections on only one side of the jack unit.

The pipes **251**, **253** and **254**, which preferably comprise flexible hoses to allow for the movement of the parts, connect with a combination manual and remote control valve device **260**, shown schematically in Figure 28, there being one such valve device **260** for each individual jack unit **202**. When the jack units are operated individually, as in driving or pulling one pile at a time, the valve device **260** may be operated manually by a series of control levers **261**, whereby each lever controls the supply of air to one of the pipes **251** to **254**, inclusive. The individual valves and levers each have two positions wherein fluid pressure is admitted to one of the piles **251** to **254** in one position, while in the other position these pipes are open to atmosphere. The source of fluid pressure to supply the pipes **251** to **254** is obtained through a pipe **262** connecting with the main supply pipe **203**, Figure 23, which extends around the barge. Main supply pipe **203** is preferably of sufficiently large size to serve as a supply tank in a pneumatic system.

When it is desired to operate a plurality of the jack units **202** in unison, this may be accomplished by a single master control valve unit **270**, Figure 28, which is connected with all the valve devices **260** by means of four control pipes **271**, **272**, **273** and **274** which extend around the barge adjacent the supply pipe **203**, as also shown in Figure 29. Pipes and flexible hose connections 275 communicate the respective control pipes 271 to 274 with the remote control valve device **260**, and the additional pipes and hose connections, indicated at 275' in Figure 28, connect with the remote control valve device **260** for another jack unit (not shown) wherein the main air supply pipe connection is indicated at 262'.

The master control valve mechanism **270** has manual operating levers **280** for admitting fluid pressure into selected ones of the control pipes **271** to **274** from a branch **281** of the main supply pipe **203**. When a lever **280** is manipulated, for example, to admit fluid pressure into control pipe **271**, the corresponding valves in each valve unit **260** are operated by remote control to admit

fluid pressure from pipes **262** into the pipe **251** of each jack unit **202** and actuate all the upper gripper assemblies simultaneously. When the master control lever **280** under consideration is shifted to a different position, fluid pressure is released from control pipe **271** to shift all the corresponding valves in remote control valve units **260** to relieve the pressure in each pipe **251**. In this way, all the jack units **202** are operated in unison by a single operator at the master control valve unit **270**.

It is to be understood that Figure 28 is in the nature of a diagrammatic representation of the control system, and that the branch supply pipe **262** and branch control pipes **275** preferably terminate at the deck outlet connections **204**. The deck outlet connections may be equipped with suitable check valves which are automatically opened by the attachment of suitable flexible hose connections from the remote control valve units **260**. The supply pipe connections at **205** may also be accompanied by control pipe connections as illustrated in Figure 29, so that a plurality of the barges disposed as in Figure 25 may be raised or lowered simultaneously by a single master control valve unit **270** (Figure 28), if desired.

It will be noted from the disclosures in Figures 6, 22 and 27 that the improved supporting structure in its several illustrated forms, may be considered as including a base or the like, provided with an opening through which extends a suitable supporting member. The base also has vertically spaced upper and lower abutments between which the gripping assembly is vertically movable. Further, in all forms of the invention shown, the gripping assembly comprises an intermediate axially expansible member and laterally upper and lower expansible end members disposed on opposite sides of the intermediate members so that the upper end member may be moved in engagement with the adjacent upper abutment and the lower end member in contact with the lower abutment. Additionally, means are provided for selectively controlling the flow of fluid to the expansible members so that the supporting member may be moved axially relative to the base or the base may be moved axially relative to the supporting member. Thus, it will be seen that an efficient, economical and compact flexible gripping assembly is provided which is admirably suited for use with various types of land and marine supports for raising or lowering the same such as piles, columns, pillars, platforms, hoisting booms, barges, dry docks and other portable or fixed structures.

It will be appreciated, further, that the platform may be raised and lowered beneath the surface of the water with the same facility as when it is above the surface. Under water the platform may be used by divers for working on bridge piers or other submerged foundations and the like, where it is desired to raise the platform as the work progresses to higher levels.

Still other uses for the present pneumatic jack and for the novel combination of lifting jack with platform and smooth piles will occur to persons skilled in the art, but the present description is sufficient to illustrate the principles of the invention which may be adapted to the other fields of use.

It is, of course, understood that the dimensions, pressures and thrusting forces mentioned hereinabove are merely illustrative of a particular installation, as very much larger caissons may obviously be driven in the same manner. Also, hydraulic pressure may be used instead of pneumatic pressure.

Having now described my invention and in what manner the same may be used, what I claim as new and desire to protect by Letters Patent is:

1. For use in constructing a marine platform, a tubular cylindrical pile, an inflatable plug in said pile to make the pile buoyant in water, a plurality of buoyant hollow beams, each having segmental pile guide means on at least one end thereof, and means connecting said beams together in end to end relation around said pile with the beams in floating positions and said pile in an upstanding position.

2. A support of the class described including a base having an opening therein, a supporting member extending into said opening, said base having vertically spaced upper and lower abutments thereon, a movable gripping assembly positioned between said abutments, said gripping assembly including an intermediate vertically expansible and collapsible member, laterally expansible upper and lower end members disposed, respectively, above and below said intermediate member, said upper end member being arranged to be moved upwardly into engagement with said upper abutment and said lower end member downwardly into engagement with said lower abutment, means for introducing fluid under pressure into said intermediate member for moving said end members axially away from each other and selectively into engagement with either or both of said abutments, and means for selectively introducing fluid under pressure into said end members for expanding the same laterally into gripping engagement with the supporting member.

3. A support as called for in claim 2 including means for collapsing the intermediate member.

4. A jack mechanism for use on a supporting member comprising spaced upper and lower movable gripper assemblies having vertically aligned openings to receive the supporting member, vertically expansible fluid pressure operated means between said assemblies for urging them apart, each of said gripper assemblies comprising a rigid annular channel facing, and a hollow elastic annular tube in each of said channels constrictable by fluid pressure to grip the supporting member.

5. A jack mechanism for use on smooth cylindrical piles and the like, comprising upper and lower annular radially expansible gripper assemblies, flat parallel annular opposed thrust plates on said assemblies, a plurality of annular fluid pressure axially expansible hollow annular tubes disposed in superposed relation between said thrust plates, and flat annular rigid separating plates interposed between said tubes.

6. A jack mechanism for use on cylindrical piles and the like, comprising spaced upper and lower annular gripper assemblies having opposed flat annular thrust plates, a fluid pressure vertically expansible annular hollow tube confined between said thrust plates, annular channels in said gripper assemblies, and fluid pressure expansible annular hollow tubes in said channels.

7. A jack mechanism for use on smooth cylindrical piles and the like, comprising spaced upper and lower annular gripper assemblies, an annular fluid pressure expansible hollow tube disposed between said gripper assemblies for urging said gripper assemblies apart, each of said gripper assemblies comprising a cylindrical wall having parallel inwardly directed radial flanges defining annular channels, and fluid pressure expansible annular hollow tubes in said channels having cylindrical pile engaging surfaces.

8. Jack mechanism for operation on a circular column comprising: a pair of axially-elongated rigid rings for encircling the column in axially-spaced relation, each of said rings having a plurality of inwardly-facing circumferential channels therein; a hollow rubber-like constricting ring in each of said channels; a plurality of hollow rubber-like axially-extensible rings for encircling the column interposed between said rigid rings; a rigid flat ring interposed between each pair of adjacent extensible rings, each pair of adjacent extensible rings and the flat ring therebetween having aligned openings providing communication between the interiors of said pair; and means for selectively admitting pressure fluid to and exhausting pressure fluid from all the constricting rings of one of said axially-elongated rigid rings, all of the constricting rings

of the other of said axially-elongated rigid rings, and at least one of said extensible rings.

9. The structure defined in claim 8 including cylinder and piston means connected to both of the rigid rings for forcing the latter axially toward each other.

10. A marine structure comprising: a buoyant body having a plurality of caisson wells extending vertically therethrough; a jack mechanism for each of said wells and comprising upper and lower power-actuated means for releasably and independently engaging and holding a caisson slidably guided in said well against longitudinal movement relative to the corresponding holding means, and means including fluid-pressure-operable means for forcing said upper and lower holding means apart and for moving said upper and lower holding means toward each other; means on said body defining an annular abutment surrounding each of said wells below and for engagement by the corresponding lower holding means to limit downward movement thereof relative to said body; an annular abutment ring for each of said wells spaced above the corresponding abutment for engagement by the corresponding upper holding means to limit upward movement thereof relative to said body; and tension elements depending from each of said abutment rings and securing the latter to said body.

11. A marine structure comprising: a buoyant body having a plurality of caisson wells extending vertically therethrough; a jack mechanism for each of said wells and comprising upper and lower power-actuated means for releasably and independently engaging and holding a caisson slidably guided in said well against longitudinal movement relative to the corresponding holding means, and means including fluid-pressure-operable means for forcing said upper and lower holding means apart and for moving said upper and lower holding means toward each other; means on said body defining an annular abutment surrounding each of said wells below and for engagement by the corresponding lower holding means to limit downward movement thereof relative to said body; a plurality of upstanding tension elements spaced about each of said wells, secured to said body, and slidably engaging the corresponding upper holding means; and stop means on said elements to limit upward movement of the corresponding upper holding means relative to said body.

12. A marine structure comprising: a buoyant body having a deck and a plurality of caisson wells extending vertically therethrough; a jack mechanism for each of said wells above said deck and comprising upper and lower power-actuated holding means for releasably and independently engaging and holding a caisson guided in said well against longitudinal movement relative to the corresponding holding means, means for engaging one of said holding means with said body against upward movement relative to the latter, and fluid-pressure-operable means for forcefully moving the other of said holding means relative to said one holding means in a direction to move the caisson downwardly relative to said body when said other holding means is engaged with, and said one holding means is released from, the caisson.

13. A marine structure comprising: a buoyant body having a deck and a plurality of caisson wells extending vertically therethrough; a jack mechanism for each of said wells above said deck and comprising upper and lower power-actuated means for releasably and independently engaging and holding a caisson guided in said well against longitudinal movement relative to the corresponding holding means, means for engaging one of said holding means with said body against downward movement relative to the latter, and fluid-pressure-operable means for forcefully moving the other of said holding means relative to said one holding means in a direction to move the caisson upwardly relative to said body when said other holding means is engaged with, and said one holding means is released from, the caisson.

14. The method of erecting a marine platform at a site of predetermined water depth, the steps comprising: supporting in upstanding position on a buoyantly supported platform, with their lower ends above the marine bottom, a plurality of elongated platform-supporting members each symmetrical in cross section and of greater length than the water depth at the site; floating the platform to the site with the members so supported; moving the members down into substantially vertical engagement with the marine bottom at the site; engaging the members symmetrically thereabout and at an elevation thereon adjacent the platform; raising the platform a relatively short distance on the members by exerting opposing forces between the platform and the members through said engagement; engaging the members symmetrically thereabout at a different elevation thereon adjacent the platform; supporting the platform on the members against vertical movement relative thereto by the last-mentioned engagement; shifting the first-mentioned engagement to a higher elevation on the members; repeating the foregoing sequence of raising, engaging, supporting, and shifting steps until at least a substantial portion of the weight of the platform is supported on the members; engaging at least one of the members symmetrically thereabout and at an elevation thereon adjacent the platform; driving the engaged member a relatively short distance into the marine bottom by exerting opposing forces between the platform and the member through said engagement while engaging all the other members against vertical movement relative to the platform; shifting the engagement of the one member to a higher elevation thereon; and repeating the foregoing driving and shifting steps to drive the member farther into the marine bottom.

15. The method of erecting a marine platform at a site of predetermined water depth, the steps comprising: floating a platform to a site; supporting in upstanding position on the platform a plurality of elongated platform-supporting members each symmetrical in cross section and of greater length than the water depth at the site; guiding the members for substantially vertical linear movement relative to the platform and for limited canting movement in any direction relative thereto; moving the members down into engagement with the marine bottom at the site; engaging the members symmetrically thereabout and at an elevation thereon adjacent the platform while permitting said limited canting movement; raising the platform a relatively short distance on the members by exerting opposing forces between the platform and the members through said engagement; engaging the members symmetrically thereabout at a different elevation thereon adjacent the platform while permitting said limited canting movement; supporting the platform on the members against vertical movement relative thereto by the last-mentioned engagement; shifting the first-mentioned engagement to a higher elevation on the members; and repeating the foregoing sequence of raising, engaging, supporting, and shifting steps until at least a substantial portion of the weight of the platform is supported on the members.

16. The method of erecting a platform at a marine location of predetermined water depth, the steps comprising: floating the platform to the location; guiding for vertical movement on the platform a plurality of elongated upstanding platform-supporting members each of greater length than the water depth at the location; moving the members down into substantially vertical engagement with the marine bottom; raising the platform on the members by jack means, one operating on each member and releasably engageable therewith; driving the members generally sequentially to a predetermined bearing in the marine bottom; supporting the platform on the members independently of their jack means; and removing all the jack means for use with another platform.

17. The method of erecting a platform at a marine location of predetermined water depth, the steps com-

prising: floating to the location a platform having a plurality of guiding wells extending vertically therethrough and a deck flush with the upper edge of the wells; supporting in upstanding position in the wells and guided therein for substantially vertical linear movement relative to the platform, a plurality of elongated platform-supporting members each of greater length than the water depth at the location; moving the members down into engagement with the marine bottom; raising the platform on the members by jack means, one for each member and releasably engageable therewith; cutting off each member substantially flush with the deck and supporting the platform on the cut-off members independently of their jack means; and removing all the jack means for use with another platform.

18. The method defined in claim 17 in which the step of supporting the platform on the cut-off members is accomplished by placing a cap over the top of each cut-off member and its corresponding well and securing the cap to the platform.

19. A structure comprising: a platform-like body; at least one elongated substantially upright member, symmetrical in cross section, for supporting said body; guide means on said body mounting said member for substantially vertical movement therebetween; power-operated means engageable with said member uniformly thereabout for selectively effecting or restraining said relative movement; means for supporting said body on said power-operated means at a plurality of locations arranged symmetrically about said member; and yieldable means incorporated in said supporting means for substantially equalizing the body-supporting forces at said supporting means locations.

20. The method of erecting a marine platform at a site of predetermined water depth, the steps comprising: supporting in upstanding position on a buoyantly-supported platform, with their lower ends above the marine bottom, a plurality of elongated platform-supporting members each of greater length than the water depth at the site; moving all the members down into upstanding engagement with the marine bottom; raising the platform on all the members until at least a subtsantial portion of the weight of the platform is supported on the members; and driving the members generally in succession to a predetermined bearing in the marine bottom, by exerting opposed forces between the platform and the member being driven, while at least partially supporting the platform on the other members.

21. The method of erecting a marine platform at a site of predetermined water depth, the steps comprising: supporting in upstanding position on a buoyantly-supported platform, with their lower ends above the marine bottom, a plurality of elongated platform-supporting members each of greater length than the water depth at the site; moving all the members down into upstanding engagement with the marine bottom; driving a number of said members, less than all, to a bearing in the marine bottom; engaging the platform with the driven members against upward movement relative thereto; and driving the remaining members generally in succession to a bearing in the marine bottom by exerting opposed forces between the platform and each of the remaining members.

22. The method of dismantling a marine platform supported on a plurality of upstanding elongated members driven into a marine bottom, the steps comprising: lowering the platform on the members down to the water and buoyantly supporting the platform on the water; and pulling the members generally in succession out of their embedded position in the marine bottom by exerting opposed forces between the member to be pulled and the platform while engaging the platform with the remaining embedded members against downward movement relative thereto.

23. The method defined in claim 22 in which each member is pulled up only until the force necessary to raise it further is substantially equal to the weight of the member, and the platform is engaged with all the remaining members against downward movement relative thereto as each member is pulled up.

24. In a structure of the type described, the combination comprising: a platform; a plurality of substantially-upright elongated members for stably supporting said platform; guide means mounting each of said members on said platform for substantially vertical linear relative movement therebetween; a pair of power-operated holding means spaced along the length of each of said members and each independently releasably engageable with the corresponding member against longitudinal movement relative thereto; means for engaging one of said holding means of each of said pairs with said platform against upward movement relative to the latter; power-operated means for forcefully moving the other of said holding means of each of said pairs relative to said one holding means of the corresponding pair in a direction to move the corresponding member downwardly relative to said platform when said other holding means of the corresponding pair is engaged with said corresponding member, and for moving said other holding means of the corresponding pair in the opposite direction; and power-control means for selectively and individually effecting engagement and disengagement of each of said holding means with the corresponding member and for selectively operating each of said moving means.

25. In a structure of the type described, the combination comprising: a platform; a plurality of substantially-upright elongated members for stably supporting said platform; guide means on said platform mounting each of said members for substantially vertical linear relative movement therebetween; a pair of power-operated holding means spaced along the length of each of said members and each independently releasably engageable with the corresponding member against longitudinal movement relative thereto; means for engaging one of said holding means of each of said pairs with said platform against downward movement relative to the latter; power-operated means for forcefully moving the other of said holding means of each of said pairs relative to said one holding means of the corresponding pair in a direction to move the corresponding member upwardly relative to said platform when said other holding means of the corresponding pair is engaged with said corresponding member, and for moving said other holding means of the corresponding pair in the opposite direction; and power-control means for selectively and individually effecting engagement and disengagement of each of said holding means with the corresponding member and for selectively operating each of said moving means.

26. A marine structure comprising: a body; a plurality of elongated marine-bottom-engageable members for stably supporting said body; guide means on said body mounting each of said members in generally upright position on said body for relative linear movement therebetween in directions extending substantially longitudinally of the corresponding member; power-operated means acting individually on each of said members and said body for selectively restraining said relative movement or effecting said relative movement; mounting means on said body for each of said power-operated means; and shock-absorber means included in each of said mounting means for absorbing shocks imparted to said body through each of said power-operated means by abrupt engagement of the corresponding member with a marine bottom.

27. A marine structure comprising: a platform; a plurality of elongated members for stably supporting said platform; guide means on said platform mounting each of said members for relative movement between said platform and each member in directions extending substantially longitudinally of the latter; jack means for each of said members for effecting said relative move-

ment comprising a pair of upper and lower holding means spaced along the length of the corresponding member and each independently releasably engageable therewith against movement relative thereto in said directions, and power-operated means for forcing said upper and lower holding means away from each other in said directions; and resiliently yieldable abutment means secured to said platform and engageable by said upper holding means of each of said pairs on upward movement thereof to yieldably limit the extent of upward movement of said upper holding means relative to said platform.

28. A marine structure comprising: a buoyant platform; a plurality of elongated members for stably supporting said platform; guide means on said platform mounting each of said members for relative movement between said platform and each member in directions extending substantially longitudinally of the latter; jack means for each of said members for effecting said relative movement comprising a pair of upper and lower holding means spaced along the length of the corresponding member and each independently releasably engageable therewith against movement relative thereto in said directions, and power-operated means for forcing said upper and lower holding means selectively away from and toward each other in said directions; abutment means engageable by said upper holding means on upward movement thereof; resiliently cushioned means securing said abutment means to said platform to yieldingly limit the extent of upward movement of said upper holding means of each of said pairs relative to said platform; and additional abutment means secured to said platform and engageable by said lower holding means of each of said pairs for limiting the extent of downward movement of the latter relative to said platform.

29. The method of erecting a platform at a relatively-soft-bottom marine location of predetermined water depth, the steps comprising: floating to the location a platform-like buoyant body having a plurality of upstanding elongated body-supporting members mounted generally symmetrically thereon and guided for substantially vertical relative linear movement therebetween, the length of each of the members being greater than the water depth at the location and all the members being held up off the marine bottom while the body is floated to the location; moving the members down into engagement with the marine bottom; raising the body on the members until at least a major portion of the weight of the body is supported thereon; generally sequentially driving said members to refusal into the marine bottom by exerting opposing forces between each member and the body while fixing the body to all of the already driven members against said relative movement; and raising the body on all of said members to an elevation above wave action.

30. The method defined in claim 29 in which the step of moving the members down into engagement with the marine bottom is accomplished by allowing the members to drop free of any fall-restraining engagement with the body.

31. The method of erecting a platform at a relatively-soft-bottom marine location of predetermined water depth, the step comprising: floating to the location a platform-like buoyant body having a plurality of upstanding elongated body-supporting members mounted generally symmetrically thereon and guided for substantially vertical relative linear movement therebetween, the length of each of the members being greater than the water depth at the location and all the members being held up off the marine bottom while the body is floated to the location; moving the members down into engagement with the marine bottom; generally sequentially driving said members to refusal into the marine bottom by exerting opposing forces between each member and the body while fixing the body to all of the already driven members against said relative movement; and raising the body on all of said members to an elevation above wave action.

32. The method defined in claim 31 in which the step of moving the members down into engagement with the marine bottom is accomplished by allowing the members to drop free of any fall-restraining engagement with the body.

33. The method of erecting a marine platform on a plurality of smooth-surfaced supporting piles, the steps comprising: floating the platform to an erection site; projecting the piles downwardly through the platform into engagement with the marine bottom; gripping the piles by circumferential frictional engagement uniformly about each pile; lifting the platform on the piles a relatively short distance by exerting opposed forces between the grip and the platform; gripping the piles by circumferential frictional engagement uniformly about each pile at a location therealong different from the first-mentioned grip and supporting the platform on the piles by the second-mentioned grip; releasing, raising, and reapplying the first-mentioned grip; releasing the second-mentioned grip; and repeating the lifting, gripping and supporting, releasing and raising and reapplying, and releasing steps in the order above-stated to raise the platform out of water in step-by-step movements.

34. The method of erecting a marine platform on a plurality of supporting piles, the steps comprising: floating the platform to an erection site; projecting the piles downwardly through the platform into engagement with the marine bottom; gripping the piles; lifting the platform on the piles a relatively short distance by exerting opposed forces between the grip and the platform; gripping the piles at a location therealong different from the first-mentioned grip and supporting the platform on the piles by the second-mentioned grip; releasing, raising, and reapplying the first-mentioned grip; releasing the second-mentioned grip; and repeating the lifting, gripping and supporting, releasing and raising and reapplying, and releasing steps in the order above-stated to raise the platform in step-by-step movements until at least a portion of the weight of the platform is borne by the piles; and then performing the following steps on at least one pile at a time to drive the piles generally one after another while the weight of the platform is at least partially supported on the remaining piles; applying the first-mentioned grip to a pile while the second-mentioned grip thereon is released, exerting opposed forces between the first-mentioned grip and the platform to drive the pile a relatively short distance, releasing and raising the first-mentioned grip, and repeating the applying, exerting, releasing, and raising steps to drive the pile in step-by-step movements.

35. The method of erecting and refloating a marine platform on a plurality of elongated supporting members, the steps comprising: floating the platform to an erection site; projecting the members downwardly through the platform into engagement with the marine-bottom; releasably engaging first gripping means with the members against relative vertical movement; lifting the platform on the members a relatively short distance by exerting opposed forces between the first means and the platform; releasably engaging second gripping means with the members, at a location therealong different from the first means locations, against relative movement and supporting the platform on the second means; releasing, raising, and re-engaging the first means with the members; releasing the second means; repeating the lifting, engaging and supporting, releasing and raising and re-engaging, and releasing steps in the order above-stated to raise the platform in step-by-step movements until at least a portion of its weight is supported on the members; releasing, lowering, and re-engaging the first means while supporting the platform on the second means; releasing the second means and lowering the platform a relatively short distance relative to the first means; re-engaging the second means and supporting the platform thereon; repeating the releasing and lowering and re-engaging while supporting, releasing

and lowering, and re-engaging and supporting steps in the order stated immediately above until the platform is afloat; releasing, lowering, and re-engaging one of the gripping means; lifting the members a relatively short distance relative to the platform by exerting opposed forces between the one means and the platform while the other means is released; re-engaging the other means to support the members on the platform; and repeating the releasing and lowering and re-engaging, lifting, and re-engaging steps in the order stated immediately above until the members are pulled up out of engagement with the marine bottom.

36. The method of erecting a marine platform on a plurality of elongated marine-bottom-engageable supporting members, the steps comprising: floating the platform to an erection site; moving the members downwardly into substantially upstanding engagement with the marine bottom; raising the platform on the members, until at least a portion of the platform weight is supported thereon, by a plurality of jacking mechanisms, one releasably engageable with each member and each detachably mounted on the platform; driving the members generally in succession to a predetermined bearing in the marine bottom; securing the platform to the members and supporting the platform thereon independently of the jacking mechanisms; and removing the jacking mechanisms from the platform for use elsewhere.

37. A marine structure for offshore drilling comprising: a buoyant platform for supporting drilling equipment and adapted to be floated to and from selected drilling sites; a plurality of elongated marine-bottom-engageable members, each symmetrical in transverse section, carried in generally upright position by said platform for stably supporting the latter on the marine-bottom and above the surface of the water during drilling operations; guide means on said platform mounting each of said members for relative linear movement between said platform and the corresponding member in directions extending substantially longitudinally of the latter and for limited canting movement of the corresponding member in any direction relative to said platform; power-operated jacking means on said platform for each of said members and engageable uniformly about the corresponding member for selectively effecting or restaining said relative longitudinal linear movement in order to elevate said members in said guide means when said structure is being floated to and from a drilling site, release said members for downward movement relative to said platform for engagement with the marine-bottom to support said platform thereon, positively elevate said platform above the surface of the water on said members in preparation for drilling operations, and positively lower said platform downwardly to re-float the latter in preparation for moving the structure to another drilling site; and mounting means supporting each of said power operated means on said platform for limited canting movement in any direction in response to the canting movements of the corresponding member in its said guide means.

38. The structure defined in claim 37 in which the mounting means incorporates means for detachably securing the corresponding power-operated means to the platform.

39. The structure defined in claim 37 including power-control means for the power-operated jacking means for selectively operating the latter simultaneously or individually.

40. A marine structure comprising: a buoyant platform; a plurality of generally-upright, smooth-walled, cylindrical members for stably supporting said platform on the marine bottom; guide means on said platform mounting each of said members for substantially vertical linear movement relative to said platform; and jack means, one for each member, mounted on said platform for selectively effecting or restraining said movement, each of said jack means including upper and lower power-operated holding means each independently operable to apply radially-inwardly-directed forces to its corresponding member to releasably grip the surface thereof against relative longitudinal movement, and power-operated means connected to said upper and lower holding means for effecting relative movement therebetween longitudinally of said corresponding member.

41. The structure defined in claim 12 including control means for selectively operating the jack mechanisms individually or in unison.

42. The structure defined in claim 24 in which the power-control means includes means for selectively effecting simultaneous engagement and disengagement of one of the holding means of all of the pairs or the other holding means of all of the pairs and for operating all of said moving means simultaneously.

43. The structure defined in claim 25 in which the power-control means includes means for selectively effecting simultaneous engagement and disengagement of one of the holding means of all of the pairs or the other holding means of all of the pairs and for operating all of said moving means simultaneously.

44. A platform having vertical guide openings extending therethrough for supporting columns, interior chambers about said openings, and upper and lower vertically-spaced interior abutments within said chambers; and power-operated jack assemblies in said chambers between said abutments for engaging columns in said guide openings to raise and lower the platform on the columns and to raise and lower the columns relative to the platform, said abutments being arranged to be engaged by said jack assemblies to limit the extent of vertical movement of the latter relative to the platform.

45. A device movable along and for releasably gripping a generally circular supporting member, such as a caisson, pile, or the like, at any location along the extended length thereof comprising: a rigid ring for encircling the member and having at least one inner, circumferential channel; a hollow, inflatable rubber-like constricting ring substantially complementary to, disposed in, and free from attachment with said channel, the minimum inner diameter of said constricting ring, when released, being about equal to the minimum inner diameter of said rigid ring, and said constricting ring having a cylindrical inner surface entirely unobstructedly movable radially inwardly into constricting engagement about the member; and means for introducing fluid under pressure into said constricting ring.

46. A portable marine structure adapted to be floated to and from selected operating sites, comprising: a buoyant body; means for controlling the buoyancy of said body to selectively impart a positive or a negative buoyancy thereto; a plurality of elongated marine-bottom-engageable members of greater length than the water depth at a site for stably supporting said body on the marine bottom at the site; guide means on said body maintaining said members in generally upright position thereon for substantially vertical relative movement between each of said members and said body; and power-operated jack means on said body, one operating individually on each member, for selectively effecting or restraining said relative movement in either direction in order to elevate said members in said guide means when said structure is being floated to and from a site, move said members downwardly relative to said body for engagement with the marine bottom to support said body thereon, positively elevate said body above water on said members, positively lower said platform downwardly to refloat the latter in preparation for floating the structure to another site, or, by operating said buoyancy control means so that a negative buoyancy is imparted to said body, lower the latter on said members below the surface of the water at a desired elevation above the marine bottom.

47. A portable platform provided with a plurality of chambers therein having upper and lower guide plates for vertical cylindrical columns, upper and lower inflatable

column clamp rings mounted for vertical movement in said chambers between said guide plates, vertically expanding bellows interposed between said upper and lower clamp rings to impart vertical movement thereto, and means for selectively introducing fluid under pressure to each of said gripping rings and to said bellows.

48. A fluid pressure operated mechanism comprising a tubular member, a second member having guide means for relative longitudinal movement with respect to said tubular member, a pair of expansible friction gripping rings carried by said second member, fluid pressure means for expanding said rings into engagement with said tubular member, an expansible ring disposed between said gripping rings, and fluid pressure means for expanding said last ring in a direction longitudinal of said tubular member to produce relative movement of said gripping rings when one gripping ring is released.

49. A pneumatic jack comprising a vertical cylindrical column, spaced upper and lower inflatable annular gripping members surrounding said column, an inextensible annular ring surrounding each of said gripping members to prevent outward expansion, an annular inflatable member disposed between said upper and lower gripping members and rings for vertical expansion, and means for raising said lower ring and gripping member to collapse said vertical expansion member when said lower gripping member and vertical expansion members are deflated.

50. A pneumatic jack comprising a vertical cylindrical column, a member mounted for vertical movement on said column, pneumatic internally expanding upper and lower clamp rings adapted to clamp said column when inflated, a vertically expanding pneumatic ring disposed between said clamp rings, an abutment carried by said member to limit the upward movement of said upper clamp ring relative to said member, and an abutment carried by said member to limit the downward movement of said lower clamp ring relative to said member.

51. A pneumatic jack comprising a vertical cylindrical column, spaced upper and lower pneumatic clamp rings surrounding said column and movable in either direction therealong, a vertically expansible annular bellows surrounding said column between said clamp rings to produce relative movement of said clamp rings on said column, and means for selectively controlling the supply of fluid pressure to said clamp rings and said bellows.

52. A mechanism for producing relative movement selectively in either of two directions comprising a smooth surfaced elongated member, a pair of gripping units slidable in either direction on said member, fluid-pressure means to frictionally engage one of said gripping units with said member with a uniformly distributed force perpendicular to said surface at all points of said engagement, means to move the other unit along said member away from said one frictionally engaged unit, fluid-pressure means to frictionally engage said other unit with said member with a uniformly distributed force perpendicular to said surface at all points of said engagement, and means to move said one unit toward said other, frictionally engaged unit when said one unit is disengaged from said member.

53. A fluid pressure operated jack mechanism comprising a smooth surfaced elongated member, first and second gripping units slidable in either direction along said member, one after another, fluid-pressure means to frictionally engage said first unit with said member with a uniformly distributed force perpendicular to said surface at all points of said engagement, means to move the second unit along said member toward said first frictionally engaged unit, fluid-pressure means to frictionally engage the second unit with said member with a uniformly distributed force perpendicular to said surface at all points of said engagement, means to move said first unit along said member away from said second unit when said first unit is disengaged from said member, and fluid pressure means for operating at least one of said moving means.

54. A platform frame comprising a plurality of beams, means for connecting said beams together in end-to-end relation to form chambers between the ends of the beams, top and bottom abutment walls on said chambers forming guides for supporting columns, one of said abutment walls having segments integral with the respective beams, supporting columns extending through said chambers and abutment walls, upper and lower releasable gripping rings in said chambers encircling said columns and movable between said abutment walls, and vertically expansible fluid pressure operated means acting between said rings for producing relative movement between said platform and columns in opposite directions by the selective operation of said gripping rings and expansible means.

55. In combination with a smooth surfaced elongated member, a pair of spaced gripping units movable in either direction on said member and having inflatable gripping elements frictionally engageable with said member with a force perpendicular to the surface of said member at all points of engagement with said member, and fluid pressure operated axially displaceable means between said gripping units for moving the latter away from each other on said member.

56. A platform comprising a plurality of intersecting longitudinally and transversely disposed hollow beams, the adjacent ends of each beam having an outwardly extending bottom plate provided with a segmental portion arranged to coact with a complementary segmental portion on an adjacent beam to provide a guiding opening and to form a chamber between the adjacent beams, a supporting column extending through said chamber and said opening, and clamping means in said chamber for releasably connecting the column to the platform.

57. A platform as called for in claim 56 in which said clamping means includes a laterally expansible and contractible member encircling the column and arranged to releasably engage the same, an axially expansible and contractible member operatively connected to said laterally expansible member for applying axial pressure thereto, and means for selectively introducing fluid into said members.

58. A platform as called for in claim 56 in which said clamping means includes an intermediate axially expansible inflatable member, laterally expansible upper and lower members disposed on opposite sides of said intermediate member, and means for selectively introducing fluid into said members to move a laterally expansible member in frictional engagement with the column and displace the axially expansible member so as to move the end members in opposite directions.

59. A platform comprising a plurality of intersecting longitudinally and transversely disposed hollow beams, the adjacent ends of the beams having outwardly extending bottom plates provided with a segmental portion arranged to coact with a complementary segmental portion on an adjacent beam to provide an opening and form a chamber between the adjacent beams, a supporting column extending through said opening and into said chamber, said plates constituting a guide for the column, clamping means within the chamber for releasably connecting the column to the platform, each of said beams having inclined end flanges, and means for clamping adjacent inclined flanges to each other so that the plates encircle the column when the parts are assembled.

60. A marine platform comprising a plurality of intersecting longitudinally and transversely disposed hollow beams, the adjacent ends of the beams having outwardly extending bottom plates, each of said plates being provided with a segmental portion arranged to coact with a complementary segmental portion on an adjacent beam to provide a bottom opening and form a chamber between the adjacent beams, an abutment plate having an opening registering with said bottom opening, means for connecting the abutment plate to the top wall of said chamber, a supporting column extending through said

openings and into said chamber, the walls of said openings constituting a guide for the column, and clamping means within the chamber for releasably connecting the column to the platform.

61. A marine platform comprising a plurality of intersecting longitudinally and transversely disposed hollow beams, the adjacent ends of the beams having outwardly extending bottom plates, each of said plates being provided with a segmental portion arranged to coact with a complementary segmental portion on an adjacent beam to provide a bottom opening and form a chamber between the adjacent beams, an abutment plate having an opening, registering with said bottom opening, means for connecting the abutment plate to the top wall of said chamber, a supporting column extending through said openings and into said chamber, the walls of said openings constituting a guide for the column, clamping means within the chamber for releasably connecting the column to the platform, each of said beams having inclined end flanges, and means for clamping the adjacent flanges to each other so that the plates encircle the column when the parts are assembled.

62. A marine platform comprising a plurality of intersecting longitudinally and transversely disposed hollow beams, the adjacent ends of the beams having outwardly extending bottom plates, each of said plates being provided with a segmental portion arranged to coact with a complementary segmental portion on an adjacent beam to provide a bottom opening and form a chamber between the adjacent beams, an abutment plate having an opening registering with said bottom opening, means for connecting the abutment plate to the top wall of said chamber, a supporting column extending through said openings and into said chamber, the walls of said openings constituting a guide for the column, clamping means within the chamber for releasably connecting the column to the platform, said clamping means including upper and lower radially inflatable rings encircling said column, an axially expansible bellows between said rings, and means for selectively introducing fluid under pressure into said rings and bellows for moving either or both of the rings into engagement with the column and the bellows axially to displace the rings in opposite directions.

63. A marine platform as called for in claim 62 in which said lower ring has a lifting handle connected to and extending upwardly through said chamber, and means on said abutment plate for releasably maintaining the handle in its raised position.

64. In combination with a column, posts or the like, a jack assembly arranged to be releasably connected to the column, said assembly including an intermediate axially expansible inflatable member, laterally expansible upper and lower inflatable annular members disposed on opposite sides of said intermediate member and encircling said column, and means for selectively introducing fluid into said inflatable members so as to force the laterally inflatable members into frictional engagement with the column and axially displace the intermediate member to move the annular members in opposite directions.

65. A jack of the class described including spaced annular members arranged to encircle a column, each of said members having a radially expansible inflatable hollow annular clamping tube arranged to engage the outer surface of the column, means for introducing fluid under pressure into said tube for expanding the same against the column, and fluid pressure operated expanding means between said annular members for displacing the same axially of the column.

66. A jack of the class described including spaced annular members arranged to encircle a column, each of said annular members having a radially expansible inflatable clamping tube arranged to engage the outer surface of the column, means for introducing fluid under pressure into said tubes for expanding the same against the column, an axially expansible inflatable member between said annular members, and means for introducing fluid under pressure into said axially expansible member for applying axial pressure to the annular members in opposite directions.

67. A marine structure comprising: a buoyant body having means defining a plurality of vertical circular guiding openings; a circular marine-bottom-engaging body-supporting column mounted for vertical sliding movement in each of said openings; a jack for each of said columns for effecting said movement comprising upper and lower rigid rings spaced along the length of the corresponding column and encircling the latter, upper and lower hollow rubber-like constricting rings interposed between said corresponding column and said upper and lower rigid rings, respectively, a hollow rubber-like axially-extensible bellows-like ring interposed between said rigid rings and encircling said corresponding column, means for selectively admitting pressure fluid to and exhausting pressure fluid from said constricting rings and said extensible ring to selectively cause said constricting rings to grip or release said column and said extensible ring to force said rigid rings apart or permit them to approach each other, and means for moving said rigid rings toward each other to collapse said extensible rings; abutment means secured to said body for each of said jacks and engageable by said upper rigid ring thereof to limit the extent of upward movement of the latter relative to said body; and additional abutment means secured to said body for each of said jacks and engageable by said lower rigid ring thereof to limit the extent of downward movement of the latter relative to said body.

68. The structure defined in claim 67 in which the means for moving the rigid rings toward each other comprises a spring.

69. The structure defined in claim 67 in which each column has a loose fit in its corresponding guiding opening and in which the rigid rings of each jack and their corresponding abutments are constructed for limited relative movement therebetween in any direction extending substantially transversely of the guiding openings.

70. The structure defined in claim 67 in which each column has a loose fit in its corresponding guiding opening and including mounting means for supporting the rigid rings of each jack on the platform for limited canting in any direction relative to the axis of their corresponding guiding opening.

71. A unitary jack mechanism for use with smooth piles and the like comprising: a pair of inflatable ring assemblies adapted to surround a pile and to be movable in either direction therealong; fluid-pressure-operated means for selectively engaging said ring assemblies with the pile to grip the latter against axial movement therebetween; and fluid-pressure-operated means connected to said assemblies for forcing the latter relatively away from each other axially of the pile when one of said assemblies is released from the pile.

72. In a marine platform having a plurality of smooth vertically-movable caissons for stably supporting the platform, the combination comprising: a pair of upper and lower inflatable ring assemblies surrounding each caisson; fluid-pressure-operated means for selectively engaging each of said ring assemblies with the caisson against axial movement therebetween; means for at least partially supporting the platform on one of said ring assemblies of each of said pair; means for supporting the other of said ring assemblies of each of said pair on the platform; and fluid-pressure-operated means connected to said assemblies of each of said pair for moving said assemblies vertically apart.

73. A marine structure comprising: a platform; a plurality of elongated marine-bottom-engageable members for stably supporting said platform; guide means on said platform mounting each of said members for relative

movement between said platform and the corresponding member in directions extending substantially longitudinally of the latter; jack means for each of said members for selectively effecting or restraining said relative movement comprising a pair of upper and lower fluid-pressure-operated holding means spaced along the length of the corresponding member and each independently releasably engageable therewith against movement relative thereto in said directions, and means including fluid-pressure-operated means for forcing said upper and lower holding means away from each other in said direction and for moving said upper and lower holding means toward each other in said directions; and abutment means for each of said jack means secured to said platform and engageable by one of said holding means of the corresponding jack means for limiting the extent of upward movement of said one holding means relative to said platform in order to partially support said platform or exert a lifting force thereon by operation of the corresponding jack means.

74. A marine structure comprising: a platform; a plurality of elongated marine-bottom-engageable members for stably supporting said platform; guide means on said platform mounting each of said members for relative movement between said platform and the corresponding member in directions extending substantially longitudinally of the latter; jack means for each of said members for selectively effecting or restraining said relative movement comprising a pair of upper and lower fluid-pressure-operated holding means spaced along the length of the corresponding member and each independently releasably engageable therewith against movement relative thereto in said directions, and means including fluid-pressure-operated means for forcing said upper and lower holding means away from each other in said directions and for moving said upper and lower holding means toward each other in said directions; abutment means for each of said jack means secured to said platform and engageable by one of said holding means of the corresponding jack means for limiting the extent of upward movement of said one holding means relative to said platform in order to partially support said platform or exert a lifting force thereon by operation of the corresponding jack means; and additional abutment means for each of said jack means secured to said platform and engageable by the other of said holding means of the corresponding jack means for limiting the extent of downward movement of said other holding means relative to said platform in order to support the corresponding member or exert a lifting force thereon by operation of the corresponding jack means.

75. A marine structure comprising: a platform; a plurality of elongated marine-bottom-engageable members for stably supporting said platform; guide means on said platform loosely mounting each of said members for relative movement between said platform and the corresponding member in directions extending substantially longitudinally of the latter; jack means for each of said members for selectively effecting or restraining said relative movement comprising a pair of fluid-pressure-operated upper and lower holding means spaced along the length of the corresponding member and each independently releasably engageable therewith against movement relative thereto in said directions, and means including fluid-pressure-operated means for forcing said upper and lower holding means away from each other in said directions and for moving said upper and lower holding means toward each other in said directions; abutment means for each of said jack means secured to said platform and engageable by one of said holding means of the corresponding jack means for limiting the extent of upward movement of said one holding means relative to said platform while providing for limited relative movement between said one holding means and the corresponding abutment means in any direction extending substantially transversely of the corresponding guide means; and additional abutment means for each of said jack means secured to said platform and engageable by the other of said holding means of the corresponding jack means for limiting the extent of downward movement of said other holding means relative to said platform while providing for limited relative movement between said other holding means and the corresponding additional abutment means in any direction extending substantially transversely of the corresponding guide means.

76. A marine structure comprising: a platform; a plurality of elongated marine-bottom-engageable members, each symmetrical in transverse section, for stably supporting said platform; guide means on said platform loosely mounting each of said members for relative movement between said platform and the corresponding member in directions extending substantially longitudinally of the latter; power-operated means on said platform for each of said members and engageable with the corresponding member uniformly thereabout for selectively effecting or restraining said relative movement; and mounting means supporting each of said power-operated means on said platform for limited movement relative to said guide means in any direction extending substantially transversely thereof.

77. A marine structure comprising: a platform; a plurality of elongated marine-bottom-engageable members, each symmetrical in transverse section, for stably supporting said platform; guide means on said platform loosely mounting each of said members for relative movement between said platform and the corresponding member in directions extending substantially longitudinally of the latter; power-operated means on said platform for each of said members and engageable with the corresponding member uniformly thereabout for selectively effecting or restraining said relative movement; and mounting means supporting each of said power-operated means on said platform for limited canting movement in any direction relative to said guide means.

78. A marine structure comprising: a platform; a plurality of elongated marine-bottom-engageable members, each symmetrical in transverse section, for stably supporting said platform; guide means on said platform loosely mounting each of said members for relative movement between said platform and the corresponding member in directions extending substantially longitudinally of the latter; power-operated means on said platform for each of said members and engageable with the corresponding member uniformly thereabout for selectively effecting or restraining said relative movement; and mounting means supporting each of said power-operated means on said platform for limited movement relative to said guide means in any direction extending substantially transversely thereof and for limited canting movement in any direction relative to said guide means.

79. A marine structure comprising: a platform; a plurality of elongated marine-bottom-engageable members, each symmetrical in transverse section, for stably supporting said platform; guide means on said platform mounting each of said members for relative linear movement between said platform and the corresponding member in directions extending substantially longitudinally of the latter and for limited canting movement of the corresponding member in any direction relative to said platform; power-operated means on said platform for each of said members and engageable uniformly about the corresponding member for selectively effecting or restraining said relative longitudinal linear movement; and mounting means supporting each of said power-operated means on said platform for limited canting movement in any direction relative to said platform.

80. A marine structure comprising: a buoyant platform; a plurality of elongated marine-bottom-engageable

members, each having a circular section of uniform diameter throughout at least a major portion of its length, for stably supporting said platform; circular guide means on said platform slidably and rotatably mounting said circular section of each of said members for relative rotary movement between said platform and the corresponding member and for relative linear movement between said platform and the corresponding member in directions extending substantially longitudinally of the latter; jack means for each of said members for selectively effecting or restraining said relative linear movement comprising a pair of upper and lower fluid-pressure-operated holding means spaced along the length of the circular section of the corresponding member and each independently releasably engageable therewith against movement relative thereto, and means including power-operated means for moving said upper and lower holding means selectively away from and toward each other in said directions; abutment means secured to said platform for each of said jack means and engageable by one of said holding means thereof for limiting the extent of upward movement of said one holding means relative to said platform in order to partially support said platform or exert a lifting force on the latter by operation of said jack means; and additional abutment means secured to said platform for each of said jack means and engageable by the other of said holding means thereof for limiting the extent of downward movement of said other holding means relative to said platform in order to support the corresponding member or exert a lifting force thereon by operation of the corresponding jack means.

81. A marine structure comprising: a buoyant platform; a plurality of elongated marine-bottom-engageable members, each symmetrical in transverse section, for stably supporting said platform; guide means on said platform mounting each of said members for relative movement between said platform and the corresponding member in directions extending substantially longitudinally of the latter; jack means for each of said members for selectively effecting or restraining said relative movement comprising a pair of upper and lower fluid-pressure-operated holding means spaced along the length of the

corresponding member and each independently releasably engageable therewith uniformly thereabout against movement relative thereto in said directions, and means including power-operated means for moving said upper and lower holding means selectively away from and toward each other in said directions; abutment means secured to said platform for each of said jack means and engageable by one of said holding means thereof for limiting the extent of upward movement of said one holding means relative to said platform in order to partially support said platform or exert a lifting force on the latter by operation of the corresponding jack means; and additional abutment means secured to said platform for each of said jack means and engageable by the other of said holding means for limiting the extent of downward movement thereof relative to said platform in order to support the corresponding member or exert a lifting force thereon by operation of the corresponding jack means.

References Cited in the file of this patent

UNITED STATES PATENTS

103,899	Lewis	June 7, 1870
1,506,418	Evensta	Aug. 26, 1924
1,586,923	Townsend	June 1, 1926
1,895,132	Minor	Jan. 24, 1933
2,530,160	Finley	Nov. 14, 1950
2,531,983	McCoy	Nov. 28, 1950
2,539,695	Moon	Jan. 30, 1951
2,555,145	McKinney	May 29, 1951
2,589,146	Samuelson	Mar. 11, 1952
2,592,448	McMenimen	Apr. 8, 1952
2,597,691	Wikstrom	May 20, 1952
2,602,636	Travers	July 8, 1952
2,621,485	Ross	Dec. 16, 1952
2,687,017	Gerwick	Aug. 24, 1954

FOREIGN PATENTS

600,129	Great Britain	Apr. 1, 1948
612,201	Great Britain	Nov. 9, 1948
143,998	Australia	Nov. 18, 1948