Jan. 18, 1949. J. B. DECKER 2,459,687

AERIAL SIGNAL

Original Filed June 22, 1937

FIG. 5.

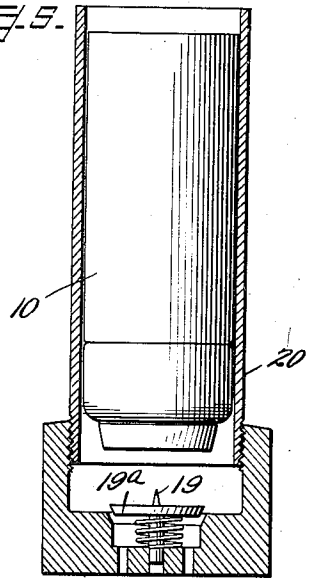

FIG. 1.

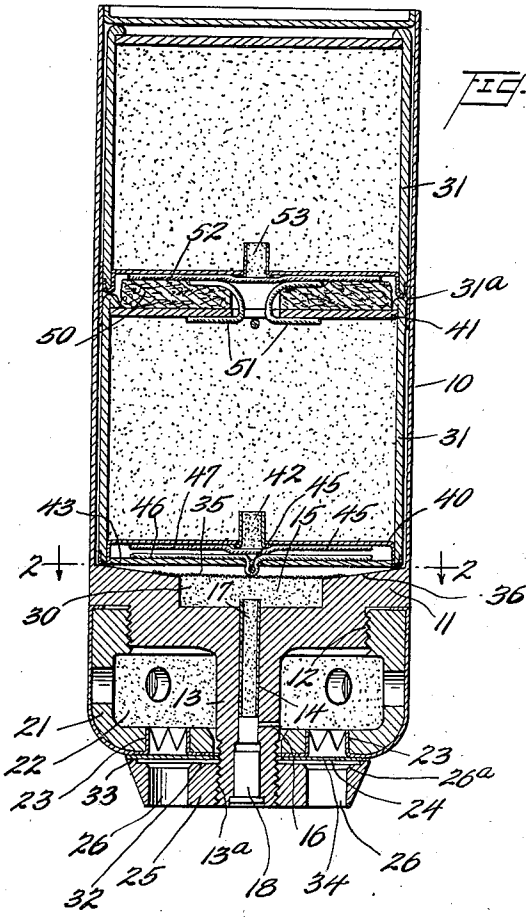

FIG. 2.

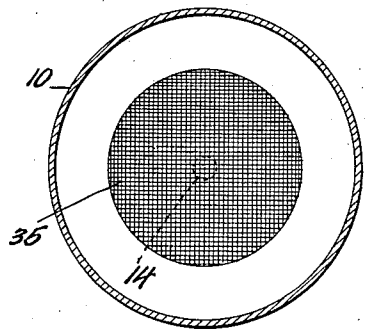

FIG. 3.

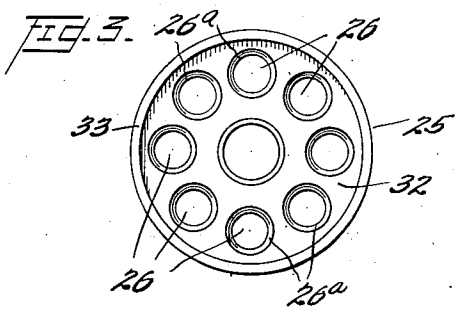

FIG. 4.

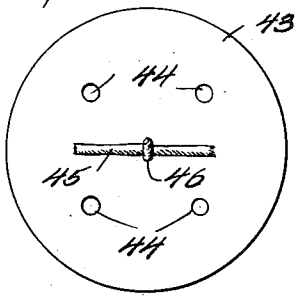

Inventor,

Josef B. Decker

By Watson, Cait, Morse & Grindle

Attorneys

Patented Jan. 18, 1949

2,459,687

UNITED STATES PATENT OFFICE

2,459,687

AERIAL SIGNAL

Josef B. Decker, Elkton, Md., assignor, by mesne assignments, to the United States of America as represented by the Secretary of the Navy

Application June 22, 1937, Serial No. 149,741
Renewed May 29, 1939

16 Claims. (Cl. 102—37.7)

1

This invention relates to aerial signals and particularly to ship identification signals. Devices of this general character have been known and used for some time and the present invention concerns certain improvements in the details thereof by which the operation and functioning of the device is rendered more certain and satisfactory. The nature and value of the present improvements will appear from the following specification, taken in connection with the accompanying drawing, in which

Figure 1 is a longitudinal section of a signal device involving the present improvements;

Figure 2 is a transverse section on the line 2—2 of Figure 1;

Figure 3 is a plan view of the lock nut for securing the various parts together as hereafter described;

Figure 4 is a plan view of a disc and associated parts forming part of the structure of the signal; and

Figure 5 is a view more or less diagrammatic of the gun or mortar with which the signal device is employed.

A brief description of the principal parts or features of aerial signals of this kind will suffice as a basis for understanding the present improvements. Referring to the drawing in detail, the signal includes a shell 10 having a relatively heavy base 11 provided with a threaded shoulder 12 and also with a rearwardly projecting stem 13 threaded at 13a, all these parts preferably being made integral and formed of suitable metal such as aluminum. A passage or bore 14 extends longitudinally through the stem 13 and at its front end communicates with a recess or cavity 15 formed in the base 11. A flash hole 16 extends laterally from an intermediate point in the passage 14, the purpose of which will presently appear. A delay fuse indicated at 17 is mounted in the front portion of the passage 14 and extends from a point adjacent the flash hole 16 into the cavity 15. A percussion cap 18 is mounted in the rear end of the passage 14, which cap is adapted to strike a suitable firing pin 19 arranged in the bottom of the gun or mortar, shown generally at 20, such pin usually being supported on a spring pressed valve indicated at 19a, which is closed by the contact of the shell with the firing pin 19.

A casing 21 surrounds the stem 13, and at its front end this casing is internally threaded and is adapted to be screwed down tightly upon the threaded shoulder 12 of the base. The casing

2

21 is spaced from the stem 13 to form a chamber 22 in which is placed a charge of powder or other explosive. The flash hole 16 communicates with said chamber. At its rear end the casing 21 is provided with a central opening or hole through which the rear threaded end of the stem 13 projects and also with a series of holes 23 surrounding and spaced from said central opening. A thin annular disk 24 of lead or other suitable soft metal is arranged against the rear end of the casing 21 and covers the openings 23. This disk is forced tightly against the casing 21 by means of a lock nut 25 threaded on the stem 13, and this nut is provided with a series of openings 26 adapted to register with the openings 23 in the casing 21.

The lead disk 24 serves to tightly seal the chamber 22 and prevent deterioration of the explosive material therein. However, when the percussion cap 18 is fired by dropping the shell into the gun or mortar, the flash therefrom ignites the powder or explosive in the chamber 22, and the gases from such explosion rupture the lead disk 24, pass through the aligned openings 23, 26, and by their reaction against the rear end of the gun or mortar the shell is projected therefrom to the desired height.

The delay fuse 17 positioned in front of the flash hole 16 is also ignited when the percussion cap is fired. At its front end this delay fuse communicates with a charge 30 of explosive material in the cavity 15 of the shell. This is generally termed the expelling charge, and its function is to expel from the front end of the shell 10, at the proper time, the container or containers indicated at 31, which carry suitable pyrotechnic material or showers to give the desired signal, such material also being ignited by suitable fuses from the expelling charge 30, as later described.

One feature of the present invention relates to the lock nut 25 which clamps the lead disk 24 against the casing 21. As heretofore constructed, said lock nut was provided with a flat surface adapted to bear against the disk over the entire area or surface of the nut. With such a construction, it has been found that fragments of the lead disk 24 are apt to be torn loose and blown back into the gun or mortar and interfere with the subsequent closing of the valve 19a when the next shell is dropped into the mortar. To obviate this difficulty the upper or inner face 32 of the lock nut 25 is provided around its edge with a flange 33 which extends slightly above said surface. In other words the upper surface

32 of the lock nut is slightly depressed below the flange 33. When the lock nut 25 is in position, the disk 24 is tightly clamped between said flange 33 and the rear surface of the casing 21, but a slight clearance or space, indicated at 34, exists between the face 32 of the nut and the rear surface of said casing. By reason of this arrangement, it has been found that when the lead disk 24 is ruptured in line with the openings 23, 26, the material of the disk is not detached and blown out, but rather tends to split or tear and fold back against the side of the opening 26. To facilitate such folding back of the ruptured parts of the disk, the upper ends of the openings 26 are slightly flared or enlarged as shown at 26*a*. The result is that no fragments of the sealing disk 24 are detached to interfere with the proper closing of the valve 19*a*, as shells are repeatedly fired from the mortar.

Another feature of the present invention relates to the covering for the expelling charge 30 in the cavity 15. Heretofore a disk of paper has been used for that purpose, but has been found more or less unsatisfactory since it is difficult to securely glue such paper disk in position, and the same is apt to break or crack permitting escape of the explosive material. These difficulties have been obviated by the use of a disk of textile material indicated at 35, and for that purpose finely woven textile cloth has been found particularly effective. Fine mesh muslin, having a mesh of about 200 per inch, has been found satisfactory. A disk of such material can be easily and readily glued to the metal surface of the shell around the cavity 15. This surface is usually made somewhat dished or flaring as shown at 36, but in spite of that fact the textile disk will stretch and bend slightly and readily accommodate itself to such surface and can be easily and readily glued into place, thus making a very effective covering for the cavity 15 and the expelling charge therein.

A still further feature of the present invention relates to improved means for insuring proper ignition of the pyrotechnic material of the signal. In the accompanying drawing two separate charges or showers of pyrotechnic material are shown, each included in a separate container, which containers are secured together as by means of a band 31*a* of tape or other suitable material. A cup shaped cap or disk 40 is mounted in the lower end of the lower container and a disk 41 in the upper end thereof. This container may be made of fibrous or other suitable material and is filled with a charge of pyrotechnic material to give the signal desired. This material is adapted to be ignited by a time fuse 42 secured in the cap 40. Mounted in the lower end of the cap 40 is a disk 43 of cardboard or similar material which is provided with a series of openings 44. A short section 45 of rapidly burning fuse or quick match is secured to the lower surface of the disk 43, and this quick match extends through a loop in a similar quick match 46 secured to the upper surface of the disk 43. Finally a short section of quick match 47 is secured to the lower side of the cap 40 and extends across the lower end of the time fuse 42. It is apparent that when the expelling charge 30 is exploded, as heretofore described, the quick matches or fuses 45, 46, and 47 will be ignited, and in turn the time fuse 42 and the pyrotechnic material in the lower container, which will continue to burn until consumed, the flame and gases being projected outwardly through the opening in which the time

fuse 42 was mounted. The provision of the openings 44 in the disk 43 has been found important and valuable in obtaining proper operation of the device. Without such openings the disk 43 is blown out of the cap 40 by the gases from the quick matches 46 and 47 with the result that the time fuse 42 is not properly ignited. This feature therefore materially contributes to proper operation of the device.

The upper container is constructed similar to the lower one, and as noted these containers are secured together and are simultaneously expelled from the shell 10 by the expelling charge 30. A relatively heavy disk 50 of felt or other fibrous material is preferably arranged between the upper and lower containers. A pair of quick matches 51 are arranged in the upper end of the lower container and extend upwardly through openings in the disk 41 and disk 50 and into close contact with a quick match 52 secured on the lower side of the upper container. This quick match is so positioned as to ignite a time fuse 53 in the upper container which in turn ignites the pyrotechnic material in the latter container, and as the same continues to burn, the flame and gases are projected outwardly through the opening occupied by the time fuse 53, as in the case of the lower container.

While, as previously noted, devices of this general construction have been known and used, it has been found by extensive tests and practical operation that the improvements herein set forth contribute materially to the proper operation of the same and insure a much higher percentage of successful devices than heretofore obtained.

Having thus described the invention, what is claimed as new and desired to be secured by Letters Patent is:

1. A signal device of the kind described, including a casing having a chamber for explosive material and openings in the rear wall of said chamber, a lock nut arranged rearwardly of said rear wall and having openings therein, a sealing disk clamped between said wall and nut, said nut having a flange around the margin thereof to press against said disk, whereby a space is formed between the surface of said nut and said disk.

2. A signal device of the kind described, including a casing having a chamber for explosive material and openings in the rear wall of said chamber, a lock nut arranged rearwardly of said wall and having openings therein adapted to register with the openings in said wall, a sealing disk clamped between said wall and said nut, said nut having the front face thereof spaced from said disk.

3. A signal device of the kind described, including a casing having a chamber for explosive material and openings in the rear wall of said chamber, a lock nut arranged rearwardly of said rear wall and having openings therein, a sealing disk clamped between said wall and nut, said nut having a flange around the margin thereof to press against said disk, whereby a space is formed between the surface of said nut and said disk, said openings in said nut having the front ends thereof flared or enlarged.

4. A signal device of the kind described having a chamber provided with openings in the rear wall thereof, a sealing disk covering said openings, a lock nut arranged to force said disk against said wall, said lock nut having on its front surface a flange contacting said disk, the front surface of said nut inside said flange being spaced from said disk.

5. A signal device of the kind described having a base, a stem extending rearwardly thereof, a casing surrounding said stem and forming a chamber for explosive material, said chamber having a plurality of openings in the rear wall thereof, a sealing disk covering said openings, a lock nut threadedly mounted on said stem and engaging said disk, said nut having a marginal flange bearing against said disk and having the front surface thereof inside said flange spaced from said disk.

6. A structure as defined in claim 4 in which said nut is provided with openings registering with the openings in said wall of the chamber.

7. In an aerial signal device of the kind described, a shell, a container for pyrotechnic material in said shell, said container having a closure for the lower end thereof, a disk of fibrous material arranged below said closure, said disk having an opening therein to permit escape of gases from the upper to the lower side thereof, a time fuse mounted in said closure above said disk, a quick match arranged between said disk and time fuse, and means to ignite said quick match when said shell is projected into the air.

8. In an aerial signal device of the kind described, a shell, a container for pyrotechnic material in said shell, said container having a cup-shaped closure for the lower end thereof, a disk arranged below said closure, said disk having openings to permit escape of gases from the upper to the lower side thereof, a time fuse arranged in said closure, and means to ignite said time fuse when said shell is projected into the air.

9. In an aerial signal device of the kind described, a shell, a container for pyrotechnic material therein, a closure for the lower end of said container, a time fuse mounted in said closure, a disk arranged below said closure, a quick match secured to the lower side of said disk, a quick match secured to the upper side of said disk and communicating with said first named quick match and with said time fuse, said disk having one or more openings to permit escape of gas from the space between said closure and said disk, and means to ignite said quick matches and fuse when the shell is projected into the air.

10. In an aerial signal of the kind described, a shell, a lower container therein, a mass of pyrotechnic material arranged in said container, an upper container also arranged in said shell and secured to the upper end of said first container, said second container also having a mass of pyrotechnic material therein, a disk of relatively thick felt arranged between said containers and having an opening therein, a time fuse in the base of said upper container, a quick match extending from a point near the top of said lower container through said opening in the disk and into proximity to said fuse, whereby the pyrotechnic material in said upper container is ignited from the burning material in said lower container after the latter is substantially consumed, and means for igniting said pyrotechnic material adjacent the end of said lower container when the shell is projected into the air.

11. In an aerial signal of the kind described, a shell, two containers for pyrotechnic material arranged therein, one above the other, a disk of felt arranged between said containers and having an opening therethrough, a delay fuse in the bottom of the upper container, a quick match extending from the lower container through said disk, a second quick match secured to the base of the upper container and extending adjacent said fuse, and means for igniting the pyrotechnic material in the lower container when the shell is projected into the air.

12. A casing containing a propelling charge, a closure for said casing provided with perforations, a sealing disk underlying the perforated closure to retain said charge in said casing, perforated retainer means for the sealing disk, and an annulus circumscribing all of the perforations and spacing the adjacent surfaces of the retainer means and disk.

13. A casing containing a propelling charge, a closure for said casing provided with perforations, a sealing disk underlying the perforated closure to retain said charge in said casing, and perforated retaining means to hold the disk in place, said means confronting the disk and having a narrow marginal flange upstanding therefrom to provide a thin edge-contact around the rim of the disk and to define a yielding space for the disk.

14. A casing containing a propelling charge, a closure for said casing provided with perforations, a sealing disk underlying the perforated closure to retain said charge in said casing, perforated retainer means for the sealing disk, and an annulus circumscribing all of the perforations and spacing the adjacent surfaces of the retainer means and disk, the perforations in the retainer means and in the closure being in registration.

15. A casing containing a propelling charge, a closure for said casing provided with perforations, a sealing disk underlying the perforated closure to retain said charge in said casing, a cover disk to retain the sealing disk in position, said cover disk having perforations therein, and a peripheral flange on one of said disks to space the central portions thereof apart.

16. A casing containing an explosive charge and having a plurality of openings for the escape of gas from the charge when ignited, a sealing disk over the openings, a retainer disk to hold the sealing disk in place, said retainer disk having openings matching the casing openings and having the edges of the openings rounded where they face the sealing disk, and a peripheral flange on one of the disks to space the central portions thereof.

JOSEF B. DECKER.

REFERENCES CITED

The following references are of record in the file of this patent:

UNITED STATES PATENTS

Number	Name	Date
1,326,494	Gowdy	Dec. 30, 1919
1,771,455	Wiley	July 29, 1930
1,895,563	Armstrong	Jan. 31, 1933
2,180,667	Decker	Nov. 21, 1939