June 30, 1959 E. F. WERNDL 2,892,990

ELECTRICAL CONNECTOR

Filed Oct. 19, 1953 4 Sheets-Sheet 1

Fig. 5.

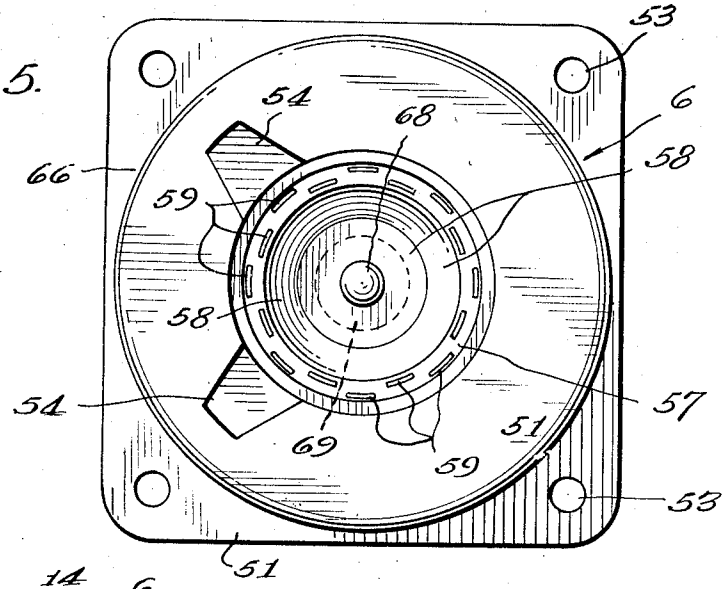

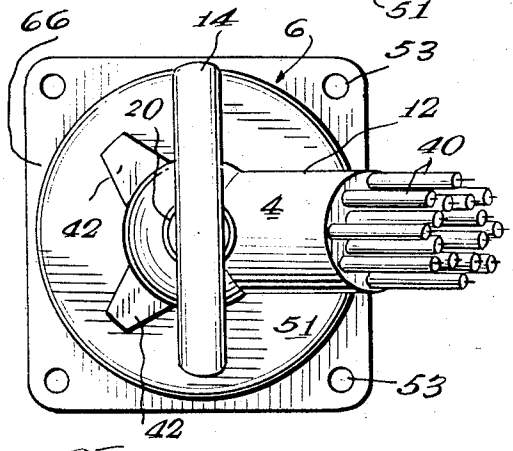

Fig. 2.

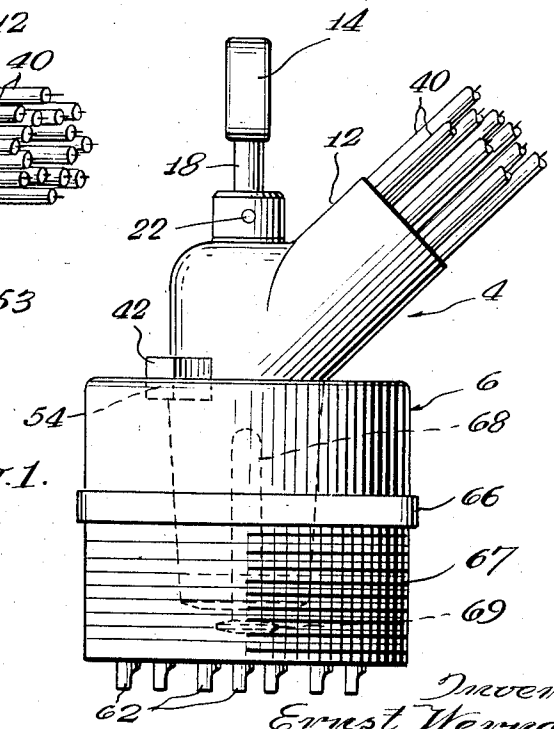

Fig. 1.

Inventor
Ernest Werndl
By Louis Bernat
Attorney

June 30, 1959 E. F. WERNDL 2,892,990

ELECTRICAL CONNECTOR

Filed Oct. 19, 1953 4 Sheets-Sheet 2

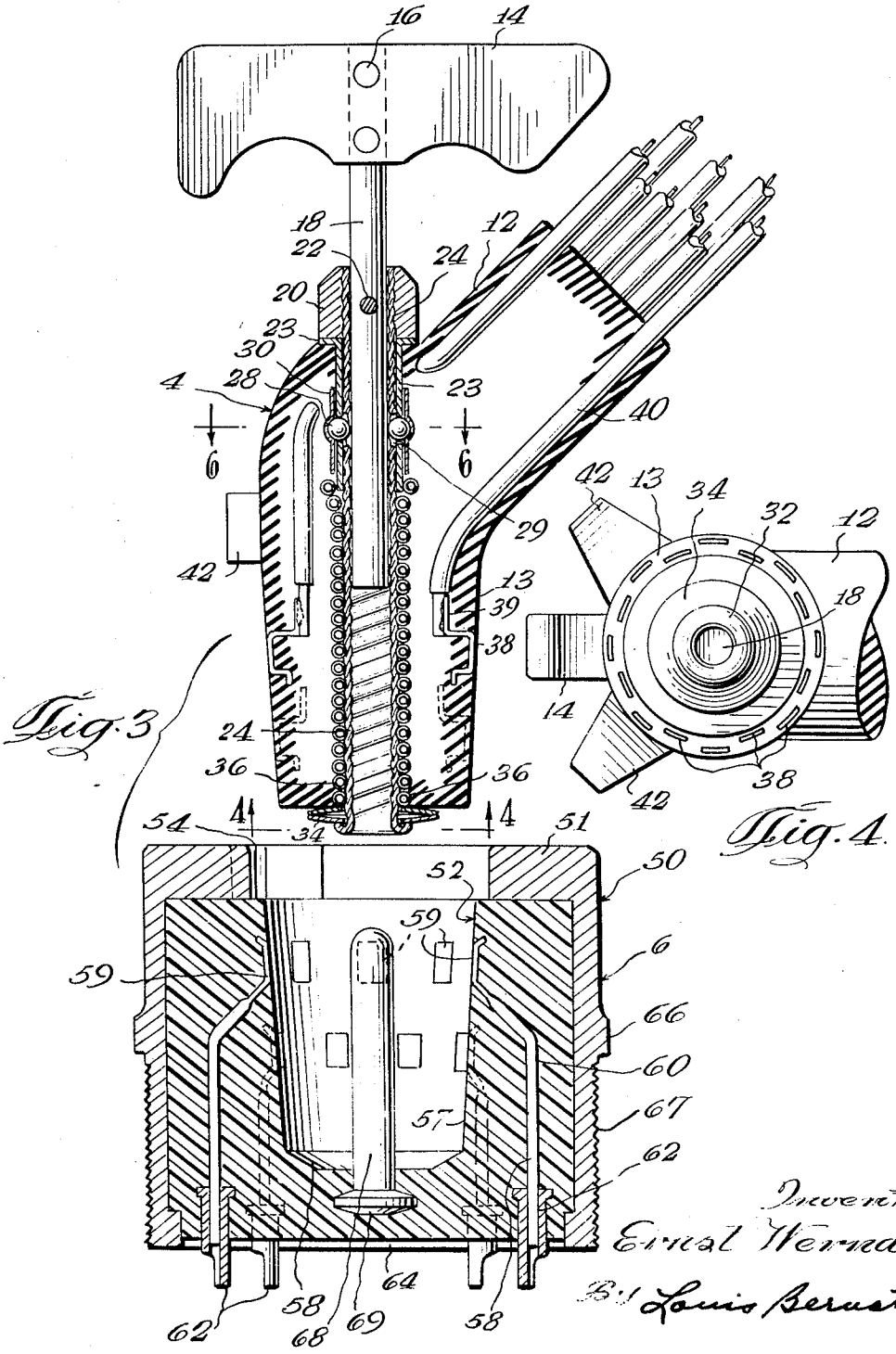

Fig. 3

Fig. 4

Inventor
Ernst Werndl
By Louis Berust
Attorney

June 30, 1959 E. F. WERNDL 2,892,990

ELECTRICAL CONNECTOR

Filed Oct. 19, 1953 4 Sheets-Sheet 3

Fig. 6.

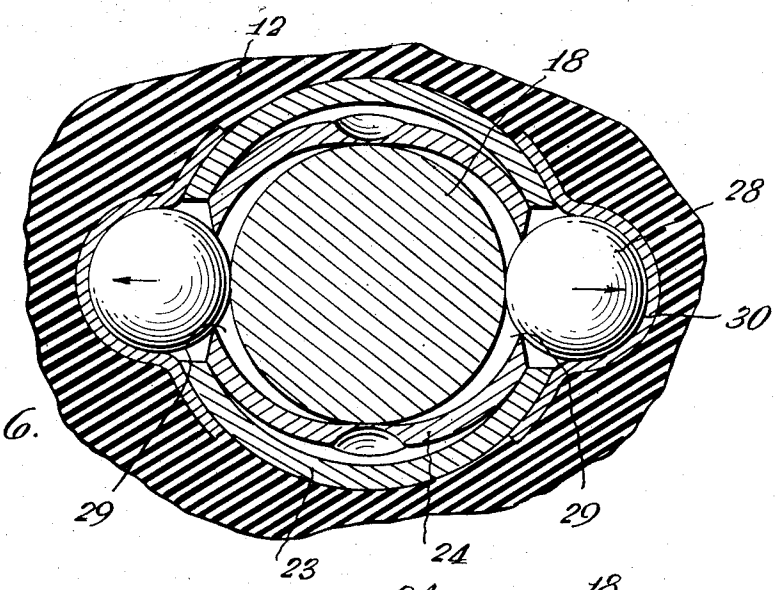

Fig. 7.

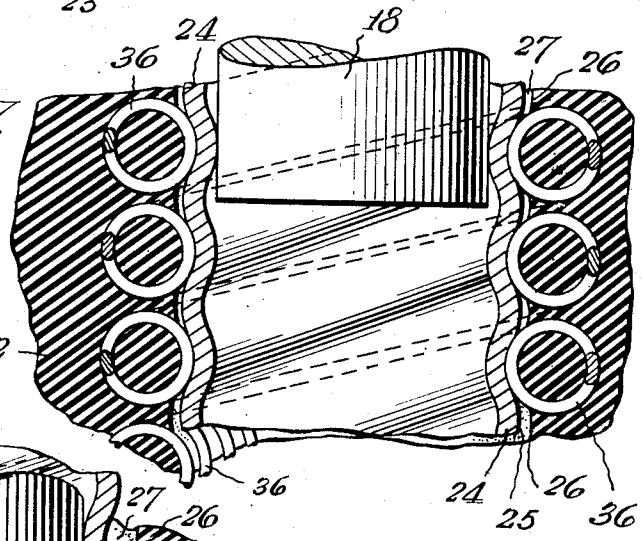

Fig. 8.

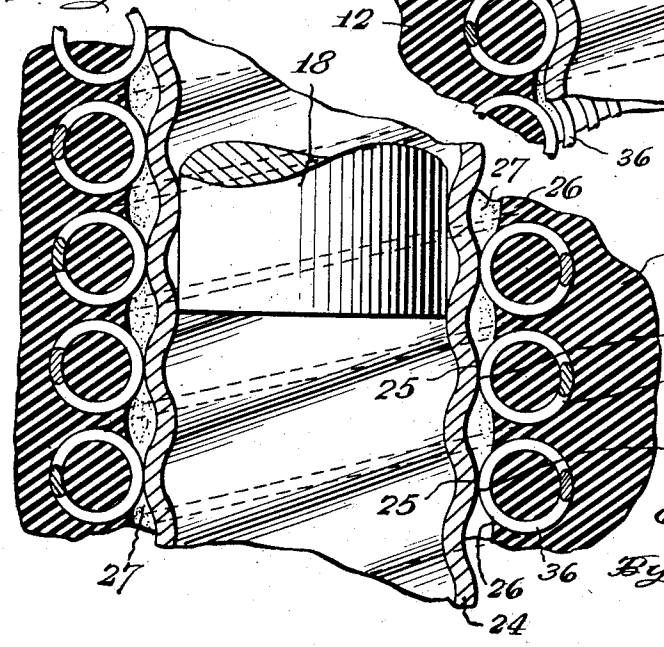

Inventor
Ernst Werndl
By Louis Bernst
attorney

June 30, 1959 E. F. WERNDL 2,892,990

ELECTRICAL CONNECTOR

Filed Oct. 19, 1953 4 Sheets-Sheet 4

Fig. 12.

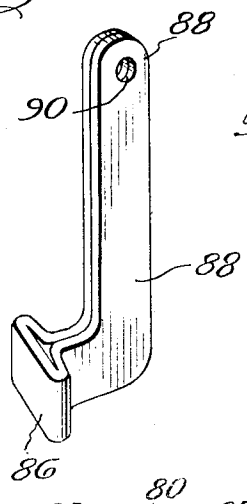

Fig. 10.

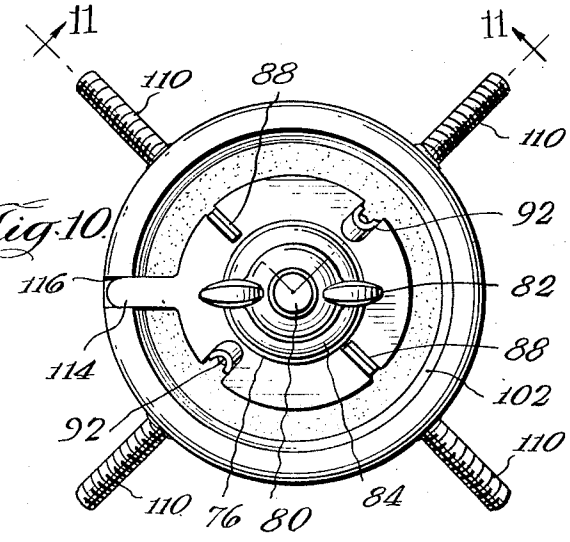

Fig. 9.

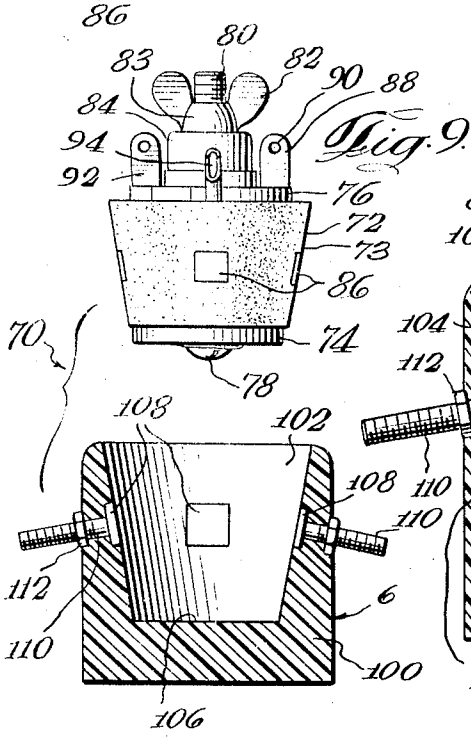

Fig. 11.

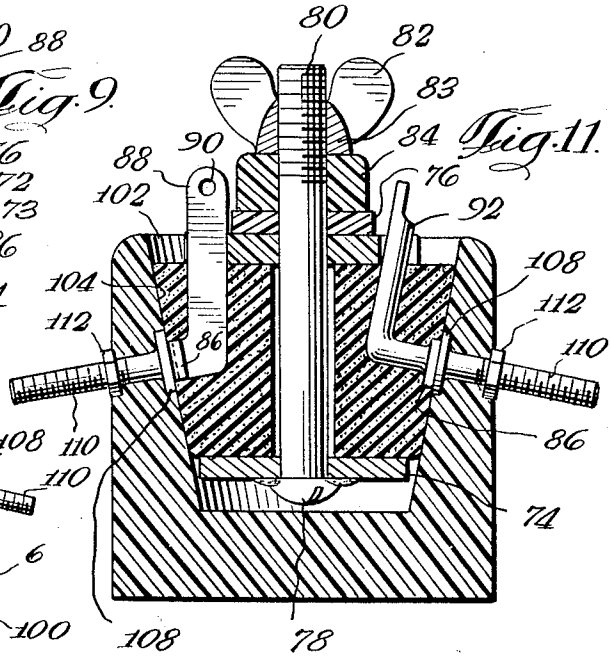

Inventor
Ernst Werndl
By Louis Bernat
Attorney

United States Patent Office 2,892,990 Patented June 30, 1959

2,892,990

ELECTRICAL CONNECTOR

Ernst F. Werndl, Alamogordo, N. Mex., assignor to Land-Air, Inc., Chicago, Ill., a corporation of Illinois

Application October 19, 1953, Serial No. 386,902

8 Claims. (Cl. 339—60)

This invention relates generally to electrical connectors, and more particularly to a novel electrical connector suitable for use under standard and ordinary conditions, as well as for use at high voltages and high altitudes which may be experienced in aircraft use.

Electrical connectors designed for high voltage application have been generally unsatisfactory for high altitude application. At high altitudes there is a greater tendency for voltage break-down of the insulating material, as well as a substantial reduction in the current carrying capacity of the connector contacts. In addition, it is important that the electrical connector be subjected to extreme vibration without electrical break-down or deterioration of the components of the connector.

In order to overcome these objections, it is desirous that the connector be vapor-proof, and concurrently that the pressure be applied to the contacts over wide temperature ranges as well as variation in atmospheric pressure. Furthermore, ordinary connectors generally have exposed lead in wires which are a source of leakage and voltage break-down, which may constitute a serious menace to the operation of the equipment.

The principal object of the present invention is to provide a novel electrical connector which is adaptable for use not only in ordinary temperatures, but also at high altitudes, and will still handle high voltages without the danger of arcing or voltage discharge.

Another object of the present invention is to provide a novel electrical connector which is capable of being readily engaged or disengaged; and furthermore, the connector be constructed so as to assemble the lead in wires to the contacts of the male and female portions of the connector.

Another object of the present invention is to provide an electrical connector which exhibits a hermetic seal and which will operate under extreme moisture conditions, as well as varying pressures encountered at high altitudes by aircraft.

Another object of the present invention is to provide an electrical connector which will operate under impact or extreme vibration, as well as low temperatures, and should not be subject to deterioration under these conditions.

Still another object of the present invention is to provide an electrical connector wherein all the high voltage contacts and conductors are completely insulated, the connector being adapted to establish a plurality of circuit connections simultaneously by simple manual engagement, and conversely, designed for quick disconnect.

Still another object of the invention is to provide an electrical connector which provides a minimum size and weight construction, and which can be constructed according to mass production procedures.

Other objects and advantages will become apparent as the description proceeds.

Referring to the drawings:

Figure 1 is a side elevation view illustrating the complementary assembly of the electrical connector embodying this invention;

Figure 2 is a top plan view of the electrical connector showing the severed lead in wires;

Figure 3 is a side elevational view partly in cross-section of the disengaged electrical connector assembly;

Figure 4 is an end view in perspective on line 4—4 of Figure 3 of the male member of the electrical connector;

Figure 5 is a top end view of the female member of the electrical connector;

Figure 6 is a fragmentary view, partly in section, on line 6—6 of Figure 3;

Figure 7 is an enlarged fragmentary view partly in section showing the normal position of the camming spring feature;

Figure 8 is an enlarged fragmentary view partly in section showing the expanded position of the camming spring feature;

Figure 9 is a side elevation view partly in section illustrating a modified embodiment of a disengaged electrical connector assembly;

Figure 10 is a top plan of the assembly of the modified form of an electrical connector.

Figure 11 is a longitudinal cross section view of the assembled modified form of the electrical connector; and

Figure 12 is a side elevational view of a contact used in the modified form of the electrical connector.

Similar characters of reference are used in all the figures of the application to indicate corresponding parts.

Referring now to the drawings, in Figure 1 there is illustrated an electrical connector in a completely engaged relationship with respect to the male member 4 and a female member 6. The male member 4 constitutes a plug or insertable element having various geometric configurations, such as a frusto-conical shape, as shown, or cylindrical, trapezoidal, polyhedric, spheroid, square or rectangular configurations. The embodiment although not limited as shown in Figures 1 through 5 is substantially a frusto-conical configuration having a side arm element 12 extending from the upper portion of the male member 4.

In this embodiment the male member 4 is made of a material having a resilient composition wherein the elastomer shall be of compressible material capable of being deformed; such material may be of the various rubber-like compositions, synthetic or natural, including the silicone types as well as various plastic materials, such as polytetrafluoroethylene, monochlorotrifluorethylene, or any resilient composition or combinations thereof that have the characteristic of being compressible. Various compositions may be used in the construction of the male member; although it is highly desirable that the material exhibit acceptable electrical characteristics for insulation purposes.

The male member 4 may be molded or cast into the desired configuration. It shall be noted that the side walls 13 of the male member 4 shall generally exhibit a gradual taper in order that it may be insertable into the complementary recess 52 of the female member 6.

The complementary recess 52 of the female member 6 shall exhibit a corresponding receiving geometric configuration as the insertable male member 4. The space tolerance between the side wall 13 of the male member 4 and the side wall surface 57 of the recess 52 shall be of sufficient distance in order to allow insertion of the male member 4. Upon compression of the male member 4, the side wall 13 of the male member 4 shall be in compressive contact with a portion of the side wall 57 of the recess 52 in the female member 6. Correspondingly, this will perform a mechanical interlock between the male member 4 and the female member 6. The degree of taper of the respective side walls 13 and 57 may vary

depending upon the compressibility of the material and the composition of each of the respective side walls **13** and **57**.

Various possible directions of application of pressure to the male member **4** may be performed by applying the pressure internally omnidirectional, internally tangential, internally radial and internally axial. Various sources of energy for applying the pressure may be used such as manual, hydraulic or pneumatic circuits, electric or electro-mechanical. Although the application of manual energy is a design requirement, the use of hydraulic or pneumatic sources are feasible.

Since a multiplication of effort is necessary, a manual device might employ a screw, gear, cam or lever system in order to compress the male member **4**. The use of the screw means, as shown in Figures 9 through 12, is mechanically simple but has certain inherent disadvantages which are directed primarily to a slower time for disconnection of the members **4** and **6** as compared to a cam action design.

A specific embodiment as illustrated in Figures 1 through 8, utilizes a pressure device of the cam type. The cam mechanical means may be located centrally in the axis of the plug member **4**. The cam surface **26** of the resilient material of the plug member **4** is shaped like a double pitch round thread formed corresponding to the cam tube **24**. The cam surface **26** normally is substantially contiguous to the outside surface **25** of the cam tube **24**; although practically there is an expanding inner recess **27** in between the outside surface **25** and the cam surface **26**.

The mechanical camming means may comprise a handle **14** attached to a shaft **18** by rivets **16** in a conventional manner. The shaft **18** extends axially through the plug member **4** having a retaining collar **20** pinned through the cam tube **24** by a rivet **22**. A bearing **23** supports the cam tube **24** for rotational purposes. The rotation of the shaft **18** is restricted and locked by a ball bearing detent illustrated in Figures 3 and 6, comprising bearings **28** confined by the resilient material through openings **29** in the tube **24** and in order to ride over the form thread of the tube **24** to another position upon rotation of the shaft **18**, the ball bearings **28** must be forced outwardly by the movement of the resilient material of the male member **4**. A spring retainer **30** is placed over the ball bearings **28** to simplify the amount of force required and to confine the resilient material.

Figure 3 illustrates a pinned shaft **18** arrangement; although the shaft may be keyed in a conventional manner to the tube **24** in order to provide the necessary rotational camming force to the resilient material. Upon the exertion of pressure through the resilient or elastomer material, which may be considered to be analogous with the distribution of pressure in a hydraulic system, the contact pressure is proportional to the parallel projection of the area of any side wall or imbedded contact surface.

The plug member **4** has a plurality of contacts **38** positioned circumferentially in various elevations along the side wall **13** of the male member **4**. These contacts **38** must be designed with sufficient effective area of its imbedded surfaces to provide the necessary contact pressure for the given resilient pressure performed by the resilient or elastomer material. In the event of an appreciable degradation of the pressure from one contact **38** to another, which may be corrected by other construction, the effective contact area can be increased for contacts **38** at low pressure points.

In order that the applied pressure of the resilient or elastomer material on the contact **38** be fully effective, the contact **38** and its corresponding conductors **39** and the lead in wires **40** should "float" in the resilient or elastomer material. They should not be stiffly attached to any rigid support in or adjacent to the resilient or elastomer material. Furthermore, the contact material for contacts **38** should be relatively thin in a dimension normal to the contact surface so that the contact surface itself would be flexible and would make a better surface contact.

The female receptacle or member **6** illustrated in Figures 1 through 3 and 5 illustrates a specific embodiment comprising an outer shell **50**, which is of substantially rigid construction produced from a metallic material, such as aluminum or brass, a fiber or molded resinous product, or a hard rubber. The shell **50** has an extended collar ring **66** for mounting purposes, and a threaded portion **67** for attachment to a panel. Mounting holes **53** are positioned in the upper portion of the shell **50** for mounting attachment.

In a specific embodiment, the insulating elastomer material **56** of the female member **6** may correspond in composition to that of the elastomer or resilient material of the male member **4**; although the elastomer **56** of the female portion **6** may exhibit properties of a higher durometer specification. The entire female structure, fundamentally, may be formed of substantially nondeformable material. The outer shell **50** is designed to confine the elastomer **56**, if used, to a substantial degree when force is applied to the male member **4** upon insertion into the complementary recess **52** of the female member **6**. It shall be noted that the geometric configuration of the recess **52** shall be substantially similar to that of the geometric configuration of the male member **4**. This construction is provided in order to complement the mechanical interlock between the male member **4** and the female member **6**. Contacts **59** are imbedded into the insulating material **56** corresponding to a relative position as contacts **38** in the elastomer of the male member **4** in order to make electrical contact upon manual engagement of the components.

The alignment of the contacts **59** of the female member **6** with respect to the contacts **38** of the male member **4** should correspond in order that upon application of pressure to the male member **4**, electrical pressure contact may be achieved. Furthermore, the side wall **13** of the male member **4** should frictionally bear upon the side wall **57** of the recess **52** of the female member **6** in order that a mechanical interlock may be achieved. It is preferred that the contact between the side wall **13** of the male member **4** and the side wall **57** of the female member **6** be circumferentially continuous frictionally in order that a hermetic seal, similar to an O-ring, be achieved. This will prevent the accumulation of moisture or condensation within the contacts **38** and **59**, thus preventing arcing or an electrical discharge. This condition is not necessary to achieve a mechanical interlock; and, therefore, it is only important that a portion of the side wall **13** be in direct contact with the side wall **57** of the female member **6** to achieve the frictional contact.

The contacts **59** in the female member **6** are fixed to conductors **60**, which are imbedded in the insulating material **56** and connected to solder lugs **62** which are affixed to the lower portion of the receptacle **50** in a conventional manner as shown. A guide pin **68** extends into the recess **52** in order to accommodate the cam tube **24**. The guide pin **68** has an extended flange portion **69** imbedded in the insulating material **56** for retention as well as alignment.

Figures 1, 2 and 5 illustrate recesses **54** in the female member **6** which accommodate the guide keys **42** of the male member **4** in order to define polarity of the electrical connector.

In describing the operation of the camming action, Figures 7 and 8 are illustrative of the system. In the particular drawings, the cam surface **26** of the resilient or elastomer material is strengthened by molding into the elastomer material a plurality of helical springs **36** wound to match the corresponding threaded portion of the cam tube **24**. When the shaft **18** is rotated either

clockwise or counter-clockwise a quarter turn to the closed position, there cannot be a screw action, for the actual position of the cam tube **24** and the elastomer material is fixed at both ends; one end by the collar **20** pressing upon the bearing **23** and at the lower end of the male member **4** by the spring washer **34** affixed to the cam tube **24** by the folded portion **32**. As a result, there is a cam action on the elastomer material with the elastomer material being expanded radially for substantially the full length of its contact with the cam tube **24**. When the radial expansion is restricted by the recess **52**, the necessary contact pressure is applied to the side walls **13** and **57** respectively, as well as to the electrical contacts **38** and **59**. The use of a spring washer **34** at the lower end of the cam tube **24** is to provide some opportunity for axial movement of the tube, if the elastomer pressure is sufficient to prevent the shaft **18** from being rotated a full 90 degrees in clockwise direction to a locked position. In case of counter-clockwise rotated shaft **18** the elasticity of the uppermost portion of the elastomer material, from collar **23** downwards, will take over this function.

Figures 7 and 8 illustrate the camming action wherein the tangential area **37** of the spring **36** is in contact with the outer thread **25** of the cam tube **24**, thereby forcing the elastomer material in a radial direction. The normal position is shown in Figure 7 while the extended position is shown in Figure 8.

The method of connecting the lead in wires **40** to the corresponding conductors **39** of the contacts **38** in the male member is not specifically set forth; although any conventional method of integral molding of the cable and the lead in wires **40** by soldering, use of screw lugs, or welding, may be used. For purposes of illustration, in Figures 1, 2 and 3 there is shown the continuous insulation identified by the side arm **12** using an external elastomer sheath over the lead-in wires **40**, thereby illustrating an integral construction which would be substantially waterproof.

Another embodiment of this invention is shown in Figures 9 through 12. Figure 9 illustrates a simplified arrangement wherein a frusto-conical geometric configuration of the male member is illustrated by a plug or male member **72** made of a resilient or elastomer composition. The operation of the device is initially shown in the camming action device. This specific embodiment utilizes a screw action in order to apply the compressive force to the elastomer plug or male member **72**. Retainer collars **74** on the lower portion and **76** on the upper portion are made of rigid material, so that the elastomer plug **72** is retained longitudinally and will expand in a radial direction on being compressed. A screw member **80** having a head **78** is rigidly affixed to the collar **74** and inserted centrally through said plug **72**. A collar **84** is inserted over said screw member **80** and a wing nut **82** having a threaded body portion **83** is inserted thereon.

Contacts are imbedded in the plug member **72** in a manner illustrated generally in Figure 11. There are various types of contacts **86**, one represented by numeral **88** as shown in Figure 12. This is a formed type of contact having a soldering eyelet **90** inserted therein. Another embodiment of the contact **86** is shown in the drawing wherein a formed conductor lug **92** is affixed to a similar contact **86** having a slotted portion **94** for soldering.

Correspondingly, a female receptacle **100** is shown wherein the receptacle portion is constructed of a substantially rigid insulating material, such as hard rubber, plastic, ceramic and the like, having a recess **102** formed therein corresponding to the geometric configuration of the plug **4**. Contacts **108** are inserted in the rigid material having a threaded conductor portion **110** affixed to the contacts **108**, and a nut **112** is threaded on the conductor portion **110** in a conventional manner.

In the operation of the mechanical screw means for applying pressure to the female receptacle or member **100**, the plug member **72** is inserted in the recess **102** and screw pressure is applied. The elastomer plug **72** expands radially wherein the side walls **73** apply pressure to the side walls **104** of the recess. In addition, contact pressure is applied to the contacts **86** and **108** respectively. The operation of this device is similar to that described in the aforementioned unit wherein a camming action applies the actual pressure.

The invention shall not be limited to the application of an axial or radial pressure, but that the pressure may be applied to the male member in any of the following directions, either internal omnidirectional, or internal tangential, or internal radial or internal axial.

Conversely, another embodiment utilizes the effect of an external axial or radial pressure applied to the female receptacle. This device utilizes a resilient or elastomer material in place of the rigid material identified by numeral **100** in Figure 9; or, if the retainer housing **50** is removed from the device as shown in Figure 3, then the elastomer material comprising the body of the female receptacle is resilient. The plug member **72** material formerly being of resilient composition is now of a rigid construction and the pressure is now applied to the female receptacle which is compressed inwardly and bears upon the rigid construction of the male member **72**. This pressure may be applied by imposing a collar around the female member **100** and compressing the now elastic composition of the female member **100**.

Another method for compressing the female member is as follows: The female member **100** of an elastic composition is considered as a hydraulic or pneumatic cylinder. The elastic material is molded with an internal void or voids which are filled with oil (or air) and connected to an external hydraulic (or pneumatic) circuit which provides and controls the pressure to force the elastic material in contact with the plug member by exerting pressure inwardly. Various other types of systems, such as electrical or electro-mechanical, may be used in order to compress the female member **6**.

In the design of the unit the elastomer or resilient material should exhibit temperature stability of electrical and mechanical properties over a wide temperature range from —70° to 300° F.

The material should resist compression, wetting, deformation, as well as oxidation, and in addition, it should exhibit insulation properties as well as resistance to mechanical and electrical fatigue. Furthermore, the material should exhibit good di-electric qualities as well as low moisture adsorption.

The electrical connector as described performs a hermetic seal very similar to the O-ring type. Under ordinary conditions the hermetic seal is not necessary, but there should be sufficient contact pressure between the male member **72** and the female member **100** for a mechanical interlock. The configuration of the male member may also exhibit a step-wise taper which would complement the recess of the female member. Various interlocking geometric configurations may be used, and the invention is not intended to be limited to any specific configuration.

The invention also describes the application of contact pressure onto the respective contacts of the male member and female member. This is substantially a sliding pressure contact which exhibits ideal electrical conduction and high current capacity.

As many changes could be made in the above construction, and many apparently widely different embodiments of this invention could be made without departing from the scope thereof, it is intended that all matter contained in the above description or shown in the accompanying drawings shall be interpreted as illustrative and not in a limiting sense.

I claim as my invention:

1. In an electrical connector, an elongated male member and a female member having an elongated socket therein for receiving said male member, said members having geometrically complementary surface configurations for accommodating coupling of said members in complementary fashion, said members each carrying a plurality of spaced contacts thereon in the complementary surfaces thereof and adapted to engage at least two contacts on the complementary member, said members each providing complementary sealing surfaces surrounding said contacts thereon and adapted to mate to effect a hermetic seal therebetween to seal off pairs of engaging contacts from other pairs of engaging contacts, the male one of said members being subject to radially outward deformation, and deforming means operatively associated with only said one deformable member to selectively deform said one member to cause contacts thereon to engage under pressure cooperating contacts of said complementary member while simultaneously causing said complementary sealing surfaces to mate to effect a hermetic seal therebetween which seals off pairs of engaging contacts from other pairs of engaging contacts.

2. In an electrical connector, an elongated male member and a female member having an elongated socket therein for receiving said male member, said members having geometrically complementary surface configurations for accommodating coupling of said members in complementary fashion, said members each carrying at least one contact thereon in the complementary surfaces thereof and adapted to engage a corresponding contact on the complementary member, said members each providing complementary engaging portions, other than said contacts and surrounding said contacts, which are capable, when engaged, to produce a mechanical interlock between the male and female members which keeps said members coupled together, the male one of said members being subject to radially outward deformation, and deforming means carried by only said one deformable member and including a force-applying member extending longitudinally of said deformable male member for selectively radially deforming said one member to cause contacts thereon to engage under pressure cooperating contacts of said complementary member while simultaneously causing the complementary engaging portions to engage to effect a mechanical, frictional, interlock between the male and female members which keeps said members coupled together.

3. In an electrical connector, an elongated male member and a female member having an elongated socket therein for receiving said male member, said members having geometrically complementary surface configurations for accommodating coupling of said members in complementary fashion, said members each carrying a plurality of contacts thereon in the complementary surfaces thereof and adapted to engage corresponding contacts on the complementary member, said members each providing complementary engaging friction-generating portions on the complementary surfaces thereof, other than said contacts and surrounding said contacts, which are adapted to engage when said members are coupled together, the male one of said members being subject to radially outward deformation, and deforming means operatively associated with only said one deformable member to selectively deform said one member and to simultaneously cause contacts thereon and the engaging friction-generating portions thereof to engage under pressure cooperating contacts and engaging friction-generating portions of said complementary member, the engagement of said friction-generating portions of said members operating to maintain said members coupled together.

4. In an electrical connector having complementary male and female members, each of which has complementary contacts and insulating portions thereon which are adapted to mate, wherein the male member is of deformable material subject to expanding deformation, and wherein deforming means are operatively associated with the male member to selectively effect deforming of the male member and engaging under pressure of said complementary contacts and insulating portions of said members; the improvement in said deforming means comprising relatively flexible elongated tubular means carried by the deformable material of said male member and shaped to provide alternate ridges and valleys on the interior of said tubular means, an elongated relatively rigid actuator positioned co-axially in said tubular means and shaped to provide alternate ridges and valleys on the exterior thereof, the dimensions of said tubular means and actuator being such that when the ridges on the actuator are in register with the valleys in the tubular means then the male member is not deformed on when the ridges on the actuator and tubular means are in register then the deformable material of the male member and the tubular means carried thereby are resiliently deformed to effect an exterior deformation of the male member, and means for selectively actuating said actuator between the two conditions defined.

5. A device as set forth in claim 4 including spring means normally biasing the actuator to one of the two defined conditions.

6. A device as set forth in claim 4 wherein at least one of the actuator or tubular means is helical in form so that rotation between the two parts effects axial movement therebetween to move said parts from one of the defined conditions to the other defined condition.

7. In an electrical connector, an axially elongated male member and a female member having complementary frusto-conical surface configurations for accommodating coupling of said members in complementary fashion, said members each being of insulating material and each carrying contacts thereon in the frusto-conical surface thereof and substantially flush therewith, said members each providing complementary engaging surfaces completely surrounding said contacts thereon, the male member being subject to deformation, and deforming means operatively associated with said deformable member to deform said member to cause contacts thereon to engage under pressure cooperating contacts of said female member while simultaneously causing said engaging surfaces thereon to engage under pressure the cooperating engaging surfaces of said female member, to thereby hermetically seal pairs of engaging contacts from other pairs of engaging contacts and to effect a frictional mechanical interlock between the male and female members which keeps said members coupled together.

8. In an electrical connector, an elongated male member having a plurality of spaced contacts positioned thereon, a female member defining a walled recess therein for receiving the male member therein and having a related number of spaced contacts in the walls of said recess for engaging the contacts on the male member, the male one of said members being of a material subject to deformation, portions of said two members having complementary engaging surfaces, other than said contacts, which are adapted to mate, and deforming means carried only by said male member and including a force-applying member extending longitudinally of said male member for selectively deforming said male member radially outwardly to cause the contacts and the engaging surfaces thereon to engage under pressure the cooperating contacts and engaging surface of said female member, and so as to effect a mechanical, frictional, hermetic interlock between the said two members which keeps the said members coupled together.

(References on following page)

References Cited in the file of this patent

UNITED STATES PATENTS

1,485,215	Coar	Feb. 26, 1924
1,901,040	Peroni	Mar. 14, 1933
1,982,077	Spencer	Nov. 27, 1934
2,428,323	Winer	Sept. 30, 1947
2,669,701	Brus	Feb. 16, 1954
2,671,204	Hubbell	Mar. 2, 1954
2,729,353	Moeller	Jan. 3, 1956
2,748,364	Kamm	May 29, 1956
2,749,526	Petersen	June 5, 1956

FOREIGN PATENTS

140,685	Germany	Apr. 21, 1904