(12) INTERNATIONAL APPLICATION PUBLISHED UNDER THE PATENT COOPERATION TREATY (PCT)

(19) World Intellectual Property Organization
International Bureau

(43) International Publication Date
8 October 2015 (08.10.2015)

WIPO | PCT

(10) International Publication Number
WO 2015/152906 A1

(51) International Patent Classification:
*G06F 1/20* (2006.01)

(21) International Application Number:
PCT/US2014/032612

(22) International Filing Date:
2 April 2014 (02.04.2014)

(25) Filing Language: English

(26) Publication Language: English

(71) Applicant: **HEWLETT-PACKARD DEVELOPMENT COMPANY, L.P.** [US/US]; 11445 Compaq Center Drive West, Houston, TX 77070 (US).

(72) Inventors: **JANIK, Craig**; 992 Moreno Avenue, Palo Alto, CA 94303 (US). **ANAND, Rajat, Sandeshkumar**; 1000 West Maude Ave, Sunnyvale, CA 94085 (US). **CHOHAN, Inderjit, Singh**; 1000 West Maude Ave, Sunnyvale, CA 94085 (US).

(74) Agents: **WARD, Aaron, S.** et al.; Hewlett-Packard Company, Intellectual Property Administration, 3404 E. Harmony Road, Mail Stop 35, Fort Collins, CO 80528 (US).

(81) Designated States *(unless otherwise indicated, for every kind of national protection available)*: AE, AG, AL, AM, AO, AT, AU, AZ, BA, BB, BG, BH, BN, BR, BW, BY, BZ, CA, CH, CL, CN, CO, CR, CU, CZ, DE, DK, DM, DO, DZ, EC, EE, EG, ES, FI, GB, GD, GE, GH, GM, GT, HN, HR, HU, ID, IL, IN, IR, IS, JP, KE, KG, KN, KP, KR, KZ, LA, LC, LK, LR, LS, LT, LU, LY, MA, MD, ME, MG, MK, MN, MW, MX, MY, MZ, NA, NG, NI, NO, NZ, OM, PA, PE, PG, PH, PL, PT, QA, RO, RS, RU, RW, SA, SC, SD, SE, SG, SK, SL, SM, ST, SV, SY, TH, TJ, TM, TN, TR, TT, TZ, UA, UG, US, UZ, VC, VN, ZA, ZM, ZW.

(84) Designated States *(unless otherwise indicated, for every kind of regional protection available)*: ARIPO (BW, GH, GM, KE, LR, LS, MW, MZ, NA, RW, SD, SL, SZ, TZ, UG, ZM, ZW), Eurasian (AM, AZ, BY, KG, KZ, RU, TJ, TM), European (AL, AT, BE, BG, CH, CY, CZ, DE, DK, EE, ES, FI, FR, GB, GR, HR, HU, IE, IS, IT, LT, LU, LV, MC, MK, MT, NL, NO, PL, PT, RO, RS, SE, SI, SK, SM, TR), OAPI (BF, BJ, CF, CG, CI, CM, GA, GN, GQ, GW, KM, ML, MR, NE, SN, TD, TG).

*[Continued on next page]*

(54) Title: HEATING ELEMENTS AND THERMAL RELEASE ADHESIVES

(57) Abstract: An example device in accordance with an aspect of the present disclosure includes a heating element and thermal release adhesive. The heating element is conformable to a coupling surface of a housing of a device. The thermal release adhesive is coupled to the heating element. The heating element is to receive electrical energy to uniformly heat and release the thermal release adhesive substantially simultaneously across the heating element.

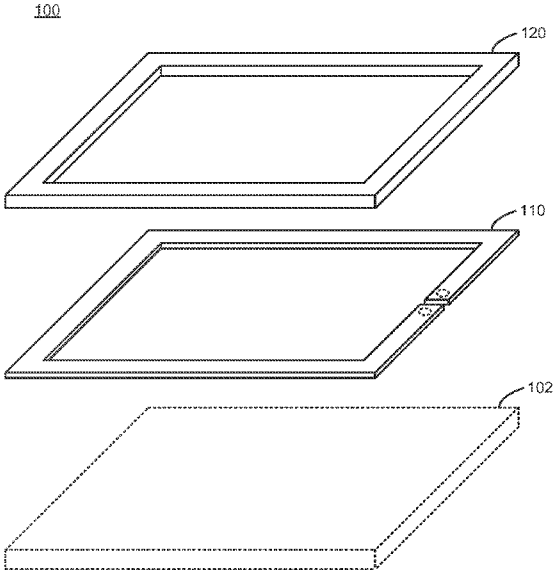


FIG. 1

WO 2015/152906 A1

**Declarations under Rule 4.17**:

— *as to the identity of the inventor (Rule 4.17(i))*

— *as to applicant's entitlement to apply for and be granted a patent (Rule 4.17(ii))*

**Published**:

— *with international search report (Art. 21(3))*

# HEATING ELEMENTS AND THERMAL RELEASE ADHESIVES

## BACKGROUND

**[0001]** A device, such as a personal computer (PC), tablet, cell phone, display, etc., may use fasteners such as screws to assemble components together. The device may be disassembled (e.g., for repair) by removing the fasteners to gain access to internal components.

## BRIEF DESCRIPTION OF THE DRAWINGS/FIGURES

**[0002]** FIG. 1 is a perspective exploded view of a device including a heating element and a thermal release adhesive according to an example.

**[0003]** FIG. 2 is a perspective exploded view of a device including a heating element and a thermal release adhesive according to an example.

**[0004]** FIG. 3 is a perspective exploded view of a device including a heating element and a thermal release adhesive according to an example.

**[0005]** FIG. 4A is a rear view of a device including a first housing and port according to an example.

**[0006]** FIG. 4B is a side section view of the device, taken along line A-A of FIG. 4A, including the first housing and a second housing according to an example.

**[0007]** FIG. 4C is a side section view of the device, showing further detail of the circled portion of FIG. 4B, including the first housing and the second housing according to an example.

**[0008]** FIG. 4D is a side section view of the device, showing further detail of the circled portion of FIG. 4C, including the first housing and the second housing according to an example.

**[0009]** FIG. 5 is a flow chart based on releasing a thermal release adhesive according to an example.

## DETAILED DESCRIPTION

**[0010]** Electronic devices may be assembled using fasteners such as screws, adhesive, and the like. However, such fasteners are associated with time-consuming and complex disassembly techniques for opening and servicing the devices. A major cost of bench repair may be due to the time spent on gaining access to a failed component or other feature that is to be serviced. For example, an operator may need on the order of minutes of time to remove screws to disassemble a device. Furthermore, the appearance of screws on a device is not aesthetically pleasing. An adhesive tape may be used in lieu of screws, to fasten device components together. However, specialized tools (e.g., a heat blower or heating gun) and labor-intensive techniques are needed to enable disassembly and opening of a device fastened with adhesive tape.

**[0011]** Examples provided herein enable the use of a thermal release adhesive and heating element, to provide easy disassembly while taking advantage of other benefits of using an adhesive, such as very high adhesive bond (VHB) tape. The heating element may be based on a thin flexible sheet that is conformable to multiple device components, surfaces, and/or adhesives, without substantially increasing device thickness. The heating element may generate heat predictably and uniformly based on applied electrical energy, to enable opening the device smoothly and easily without a separate need for an air heater/blower and associated discomfort caused by working in a heated-air environment. Thus, example devices may save bench repair time, minimize a need for cleanup of adhesive, and ensure that devices remain assembled securely and/or sealed during normal operating conditions.

**[0012]** FIG. 1 is a perspective exploded view of a device 100 including a heating element 110 and a thermal release adhesive 120 according to an example. The device 100 also may include a housing 102, to which the heating element 110 and thermal release adhesive 120 are coupled. FIG. 1 shows the heating element 110 and thermal release adhesive 120 in one arrangement

relative to the housing 102. However, in alternate examples, the order may be changed (e.g., the thermal release adhesive 120 may be placed between the heating element 110 and housing 102). Furthermore, in alternate examples, additional layers of heating element 110 and/or thermal release adhesive 120 may be used.

**[0013]** The device 100 may be an electronic device such as a phone, all-in-one, display, tablet, etc., where aesthetics and slim dimensions (affected by the use of fasteners such as screws) may be important. The device 100 also may be a medical device, where precise and compact dimensions may be dictated by medical procedure. Such devices 100 may easily be disassembled by applying electric energy to the heating element 110, to release the thermal release adhesive 120 that may be conformed to the heating element 110.

**[0014]** The heating element 110 may be a thin element, such as a film or metal trace. In an example, a thin (e.g., on the order of 0.2 millimeters (mm)), lightweight, organic polymer film such as polyimide may be used, to enable the heating element 110 to have benefits such as high tensile strength, tear resistance, and dimensional stability. In an example, the heating element 110 may be formed as a multi-layered heating element, such as two outer layers of polyimide film sandwiching an inner layer of copper. In an alternate example, a metal trace such as copper may be used as the heating element 110. Various characteristics of the heating element 110 may be chosen based on the type of material to be heated, in order to determine the corresponding characteristics of input electrical energy to trigger thermal release of the thermal release adhesive 120. For example, a heating element 110 rated at a given watt density (e.g., 5 watts per square centimeter) may provide sufficient heating for a type of thermal release adhesive 120 based on a level of electrical energy used to reach a release temperature within a time period. In an example, the heating element 110 may provide uniformity of heat radiation based on surface area coverage. The heating element 110 may cover an area fully, based on a solid pattern. The heating element 110 also may cover an area selectively, based on a pattern. The coverage pattern may be repetitive, such as a diamond-shaped grid or other repeating pattern (a matrix based on stripes, squares, hexagons, circles,

etc.) of material comprising the heating element 110. The coverage pattern may also be based on irregular shapes to cover the area occupied by the heating element 110. The coverage area may correspond to an area/surface of the adhesive to be thermally heated and released. Other factors may affect the heating characteristics and/or parameters used to achieve the threshold release temperature, including proximity of the heating element 110 to the housing 102 and the thermal release adhesive 120, and characteristics of the housing 102 (e.g., a degree of heat conduction or insulation of the housing 102).

**[0015]** The various parameters may depend on a proximity of the heating element 110 to the thermal release adhesive 120, a sinking ability of other components, such as the housing 102, and other factors. For example, a first level of electrical energy may achieve thermal release for components in contact with each other without much heat being sinked away by the housing 102 (e.g., when the heating element 110 is insulated from the housing 102, or when housing 102 is plastic or other poorly heat conducting material). In an alternate example, additional energy may be required, e.g., when the heating element 110 is not in direct contact with the thermal release adhesive 120, or when the heating element 110 is in contact with a heat conducting housing 102 (e.g., aluminum).

**[0016]** Other variations are possible, in addition to the exemplary arrangement shown in FIG. 1. Thicknesses of the various elements are not shown to scale, and also may vary. The heating element 110 may be thicker, on the order of 1 mm or more, and may be thinner, on the order of 40 microns (0.04 mm) or less. Accordingly, thicknesses of the various elements may be chosen to be suitable for desirable disassembly properties (e.g., based on a type of thermal release adhesive 120 or other components), as well as for desirable aesthetics in constructing a slim device 100 (e.g., by enabling a very slim device based on a thin heating element 110 and thermal release adhesive 120).

**[0017]** The thermal release adhesive 120 may be provided in various forms, such as liquid, gel, solid, tape, spray, and so on. In an example, the thermal release adhesive 120 is a very high adhesive bond tape to provide a good bond

under normal operating temperatures of the device 100. When heated to a predefined release temperature associated with the thermal release adhesive 120, the thermal release adhesive 120 releases the bond. In an example, the thermal release adhesive 120 may be a heat-activated foil such as Revalpha® tape from the Nitto Denko Corporation. In an alternate example, the thermal release adhesive 120 and the heating element 110 may be provided together as a tape, e.g., as a pre-formed shape and/or as a roll of thermal release adhesive heating element for device assembly, cuttable to desired length.

**[0018]** The exploded view of FIG. 1 illustrates an example arrangement of the heating element 110, thermal release adhesive 120, and housing 102, which may be assembled together as shown. For example, the heating element 110 may be integrated with the housing 102, e.g., as a printed circuit board trace placed on the housing 102. In an alternate example, the heating element 110 may be coupled to a coupling surface of the housing 102 based on a heating element adhesive (not specifically illustrated in FIG. 1), such as by placing an adhesive between the heating element 110 and the housing 102. In an example, the adhesive between the heating element 110 and housing 102 may be resistant to heat (e.g., not thermal release), or may use a thermal release temperature different than the thermal release adhesive 120. Accordingly, the heating element 110 may heat up to release the thermal release adhesive 120, while remaining adhered to the housing 102. In an alternate example, the heating element 110 also may be thermally releasable from the housing 102, e.g., at a substantially similar release temperature as the thermal release adhesive 120.

**[0019]** The device 100, including heating element 110, thermal release adhesive 120, and/or housing 102, may be factory assembled, e.g., using an assembly jig to align the components of device 100. The heating element 110 may be installed on the housing 102, e.g., via an adhesive disposed on the side of the heating element 110 facing the housing 102. The thermal release adhesive 120 may be placed onto the heating element 110, sandwiching the heating element 110 between the thermal release adhesive 120 and the

housing 102. Another component may be placed on top of the thermal release adhesive 120, such as a second housing (not shown) or other component.

**[0020]** The thermal release adhesive 120 is shown having generally the same width as the underlying heating element 110. However, widths may be varied. In an example, the thermal release adhesive 120 may be wider, and the heating element 110 may be narrower, so that the thermal release adhesive 120 may overlap edges of the heating element 110, and come in contact with a coupling surface of the housing 102, even while the heating element 110 is sandwiched between the thermal release adhesive 120 and the housing 102. Thus, a separate adhesive to adhere the heating element 110 to the housing 102 may be omitted, because the heating element 110 may be adhered to the housing 102 by virtue of the thermal release adhesive 120. Other techniques may be used to allow the thermal release adhesive 120 to secure the heating element 110, e.g., based on cutouts or other geometric features in the heating element 110 that allow the thermal release adhesive 120 to contact the housing 102 while the heating element 110 is disposed between the thermal release adhesive 120 and the housing 102.

**[0021]** Disassembly may be accomplished with or without the use of a jig. In an example, the thermal release adhesive 120 may have a first release temperature of, e.g., 120 degrees Celsius (C), and the heating element 110 may be adhered to the housing 102 based on an adhesive having a second release temperature of, e.g., 200° C. During disassembly, electrical energy may be applied to the heating element 110 to heat the thermal release adhesive 120 to the first release temperature. The device may then be opened, e.g., by splitting apart the first housing 102 from a second housing (not shown in FIG. 1). Because the entire heating element 110 is able to reach the release temperature, the entire thermal release adhesive 120 is released and smoothly separates without damaging and/or disturbing the thermal release adhesive 120. Accordingly, there is no need for skilled labor to carefully attempt to apply a heat gun all around a device 100, because the heating element 110 is able to achieve the desired release temperature substantially uniformly and simultaneously across the entire device (where heat is needed). After

separation, the thermal release adhesive 120 may cool below the release temperature based on exposure to ambient surroundings, and may be used again with no issues or any need to clean and/or re-apply the thermal release adhesive 120. The device 100 may be re-assembled with no risk of damage or prying marks to the thermal release adhesive 120, heating element 110, or housing 102. Thus, unlike other devices using adhesives, there is no need to include a separate servicing step dedicated to cleaning off and/or reapplying previously used adhesive, resulting in significant cost savings for servicing device 100.

**[0022]** Furthermore, the benefits of device 100 enable previously unserviceable devices to be serviceable. For example, a visually sensitive touch-display module, e.g., a liquid crystal module (LCM) including a touch module and liquid crystal display with front glass, may be provided from a vendor as a kit. The kit is not previously intended to be disassembled or reassembled, because of the sensitive nature of the visual components and problems associated with trying to remove any leftover adhesive or heating with inconsistent air blowers. Accordingly, if the LCM kit malfunctions, the entire LCM is discarded, which adds significant manufacturing costs. However, by using the heating element 110 and thermal release adhesive 120 described herein, the LCM may be precisely and substantially heated to uniformly release the adhesive without damage (and without heating other, potentially heat-sensitive areas of the device), enabling reworking and reassembly, resulting in substantial manufacturing cost savings. Similar savings are achievable with other devices, including medical devices that previously were disposable and not considered to be serviceable in view of existing disassembly techniques (e.g., using air heaters), due to the pinpoint heat application, and ability to precisely monitor applied temperatures and apply just enough heat to achieve thermal release, ensuring the device is protected from excessive and/or unnecessary application of heat during disassembly.

**[0023]** In an example, disassembly of the device 100 is achieved by applying appropriate electrical energy to contacts in communication with the heating element 110 (e.g., as illustrated as dashed circles in FIG. 1, at a

separation in the electrical circuit formed by the heating element 110). In alternate examples, the heating energy may be delivered using other techniques, such as induction, radiation, or other techniques of providing energy (e.g., without the use of physical contacts) to uniformly heat the heating element 110 to the release temperature of the thermal release adhesive 120.

**[0024]** The heating element 110 and the thermal release adhesive 120 are shown in FIG. 1 as substantially overlapping with and conforming to each other. In alternate examples, the components may be arranged differently, and may be spaced from, non-overlapping, and/or non-conforming with each other. In such situations, the energy applied to the heating element 110 may be increased accordingly, to accommodate any spacing or other characteristics affecting the relative arrangement between the components and corresponding heat transfer from the heating element 110 to the thermal release adhesive 120, to achieve the release temperature associated with the thermal release adhesive 120. For example, the heating element 110 may provide uniform heating across the entire amount of thermal release adhesive 120, to allow components to smoothly come apart without negative effects that might be caused due to incomplete thermal release of at least a section of the thermal release adhesive 120, resulting in tearing of the thermal release adhesive 120 and/or damage to the heating element 110 and/or other elements. For example, electrical energy may be applied as 5-12 volts (V) of direct current (DC) at up to approximately 500 milliamps (ma). In example arrangements that include features associated with different needs for energy (e.g., a greater length of heating element, a thicker or more numerous layers of thermal release adhesive 120), the applied energy may be varied to change the voltage, current, application duration, and/or other aspects. Such characteristics may be stored at a disassembly bench and/or attached to a jig that is used to service devices. Such characteristics also may be stored at the device itself, e.g., based on a non-volatile memory and/or controller programmed with characteristics/parameters specific to that device for applying disassembly energy. The characteristics for disassembly may be affected by many factors, such as the size/length of the heating element 110 corresponding to large or small devices and reaching the

release temperature of the particular thermal release adhesive 120. The heating element 110 also may be operated in a less controlled manner, e.g., allowing heating element 110 to provide heat for an indeterminate amount of time, while monitoring the temperature of the heating element 110 and cutting off power when the thermal release temperature is achieved and/or exceeded for a sufficient amount of time (as dictated by design parameters of the device 100).

**[0025]** The heating element 110 and/or thermal release adhesive 120 may be integrated with the device 100 for substantially uniform and simultaneous heating. Accordingly, a risk is eliminated for, e.g., heating fewer than all of the corners, or uneven/incomplete heating, and causing breakage of the thermal release adhesive 120 or other components when opening the device 100. In an example, the heating element 110 may be separated into various sections, and/or may be a contiguous strip as illustrated, corresponding to locations of the thermal release adhesive 120 (which also may be sectioned and/or contiguous). Similarly, each section of the heating element 110 may provide different heating characteristics (e.g., based on receiving a shared electrical signal) corresponding to heating needs at the various portions of the device 100.

**[0026]** Accordingly, the example devices described herein enable a reduction in disassembly time, resulting in drastically reduced bench repair costs. Clean-up time for any pre-existing adhesive is also drastically reduced, because the substantially uniform and simultaneous release of the thermal release adhesive 120 eliminates partial-release and breakage of the thermal release adhesive 120, heating element 110, or other components. The visual aesthetics of the device 100 are also improved, by eliminating a need for using visible fasteners such as screws, even on devices 100 that are to be disassembled multiple times. Thus, the thermal release adhesive 120 may provide a good seal for the device 100 under normal operating temperature ranges, while still enjoying ease of disassembly as desired in response to precise application of thermal release energy specifically as needed, while avoiding wasted energy (e.g., as with heated air blowers/air guns).

**[0027]** FIG. 2 is a perspective exploded view of a device 200 including a heating element 210 and a thermal release adhesive 220 according to an example. The thermal release adhesive 220 is arranged between a first housing 202 and the heating element 210. A second housing 206 is coupled to the first housing 202 via the heating element 210 and thermal release adhesive 220. Additional layers (e.g., an additional layer of thermal release adhesive 220 and/or heating element 210) may be used, but are not specifically illustrated in FIG. 2. The second housing 206 includes a user interface 208 (e.g., via a display screen) and controller (not shown). The heating element 210 includes contacts 212 (e.g., for receiving electrical energy or otherwise communicating with the device 200), and is shown as a first segment 211 and second segment 213 joined by a conductor 214. The first housing 202 includes a coupling surface 204, a port 205, a feature 203 (e.g., a bias feature, a snap fastener feature, and/or another component), a switch 218, and a power supply 216.

**[0028]** Contacts 212 are to provide a path for the heating element 210 to receive electrical energy. In an example, the contacts 212 may be aligned with corresponding contacts on the first housing 202 or second housing 206, e.g., externally accessible at port 205, such as a docking port or microphone port. Accordingly, the contacts 212 may receive energy by placing the device 200 into a disassembly dock to provide energy for the heating element 210 to achieve a threshold release temperature for disassembly. In an example, the heating element 210 may be terminated via contacts 212 on two pins at the docking connector port 205. An example port 205 may come standard with eight pins, and two of those pins (or two additional non-standard pins) may be connected to the heating element 210. A standard port, such as a universal serial bus (USB) port, may include custom modified pins to accommodate receiving electrical energy for the heating element 210. In alternate examples, the termination points may be located at discreet and/or hidden locations that are not visible externally and/or not apparent to an end user of the device 200. For example, a microphone port at the first housing 202 and/or second housing 206 may contain electrical contacts recessed behind a pinhole in an outer surface of

the corresponding housing. Other examples may use inductive or other non-contact techniques for receiving energy for heating element 210.

**[0029]** The device 200 may provide power to the heating element 210 via its own power supply 216, such as an alternating current/direct current (AC/DC) converter coupled to a wall outlet, and/or a self-contained battery in the device 200. Device 200 may include an internal connection to the contacts 212, which also may be externally accessible. In an alternate example, device 200 may provide a menu option to disassemble the device, e.g., via a service menu accessible via the user interface 208. The device may selectively couple the contacts 212 to internal and/or external power sources based on switch 218. For example, switch 218 may default to an external connection for applying electrical energy via port 205. Switch 218 may be switched based on a mechanical switch, and/or based on an electronic menu selection. The switch 218 may be triggered externally, or internally via user interface 208. The switch 218 may selectively connect the power supply 216 to the contacts 212. The device 200 may include a controller (not shown), such as a central processing unit (CPU), to operate computer readable instructions to control heating of the heating element 210. In an example, the device may include temperature sensor(s) to enable the controller to monitor a temperature of the heating element 210, during application of electrical energy to the heating element 210. Accordingly, the controller may intelligently apply energy as needed, and efficiently terminate power delivery to the heating element 210 upon reaching and/or exceeding a threshold release temperature (corresponding to design parameters).

**[0030]** The heating element 210 may be separated into multiple segments, such the first segment 211 and second segment 213, or any number of segments. In an example, the segments are used to accommodate specific contours or breaks in the coupling surface 204 of the first housing 202, such as those caused by feature 203. The first segment 211 may use a different type of heating element than the second segment 213, such as a different material, thickness, surface area, or other characteristics. Accordingly, the first segment 211 may deliver a different amount of heat than the second segment 213,

according to design parameters, as needed. Furthermore, the first segment 211 may be wired separately from the second segment 213 (e.g., each segment may be directly wired to the pins of port 205, power supply 216, and/or switch 218), allowing for selective heating to be applied (e.g., by a controller of the device 200 and/or a service bench jig) to selectively disassemble different portions of the device 200. The conductor 214 may connect the first segment 211 to the second segment 213, and may be a wire, circuit board trace, or other conductor that is used for conducting electricity. The conductor 214 does not need to provide heat, but may be chosen to provide heat according to design specifications of the device 200. The conductor 214 may be in electrical contact with the heating element 210 based on spring-loaded contacts. For example, a series of conductors 214 may be placed on the second housing 206, with spring loaded (e.g., leaf) contacts extending from the conductors at the second housing 206 to the heating element 210. Such spring loaded contacts also may provide a disassembly bias force between the first housing 202 and the second housing 206.

**[0031]** The feature 203 may be a snap to provide snap-together assembly for the first housing 202 and the second housing 206. The snap feature 203 may be mechanically actuated, e.g., using a lever to prying tool to snap and unsnap the snap feature 203. A plurality of features 203 may be used, although a single feature 203 is specifically illustrated in FIG. 2. The feature 203 also may be a spring-loaded feature, to provide a disassembly bias between the first housing 202 and the second housing 206, to enable the device 200 to automatically pop open based on the heating element 210 reaching the thermal release temperature for the thermal release adhesive 220.

**[0032]** The feature 203 also may represent components separately assembled onto the device 200, but that are also desirable to be easily disassembled using the heating element 210. For example, the feature 203 may be an electromagnetic interference (EMI) cage that is sealed to the first housing 202 using a second thermal release adhesive having a higher release temperature than the thermal release adhesive 220. The EMI cage thus may avoid a need for screws or other fasteners inside of the device 200, and

avoiding the complication of using two different sizes of screws (e.g., a larger external housing screw, and a smaller internal component/circuitry screw). The EMI cage may rarely need to be disassembled, and so may remain intact even when the housings 202, 206 are disassembled based on a first thermal release temperature of the thermal release adhesive 220. But when needed, the same heating element 210 may be heated to a higher temperature to release the EMI cage feature 203 based on a second thermal release temperature. In alternate examples, the EMI cage feature 203 may include another heating element, or heating element segment, for separately controllable heating and disassembly of that particular feature. The separate heating element may be provided at a separate surface or level (e.g., at a raised or recessed level), compared to the rest of the heating element 210 and the housing coupling surface 204. In alternate examples, multiple heating elements capable of simultaneously achieving different temperatures may be distributed throughout the device 200, for simultaneous or non-simultaneous reaching of various threshold temperatures to thermally release corresponding adhesives. Accordingly, the heating element 211 is customizable and may contour to any internal features of the device 200.

**[0033]** FIG. 3 is a perspective exploded view of a device 300 including a heating element 310 and a thermal release adhesive 320 according to an example. A first housing 302 is to be coupled to the thermal release adhesive 320, heating element 310, and second housing 306. The second housing 306 is coupled to a screen 308. The screen includes a discreet port 305, e.g., for a microphone and/or camera, which also may be used to allow discreet electrical energy delivery to contacts of the heating element 310.

**[0034]** The first housing 302 is a back cover for an all-in-one display. The thermal release adhesive 320 may be an adhesive tape that is available in reels, such as very high adhesive bond (VHB) tape. The thermal release adhesive 320 is shown as multiple separate segments, but may be provided as a single segment. The heating element 310 is shown having a contoured shape, to conform to components in the device 300. The heating element 310 also has a continuity break corresponding to the port 305 of the screen 308.

The second housing 306 may be a bezel for the display screen 308. The screen 308 may be glass or other transparent material, which may be adhered to the bezel/second housing 306 using a thermal release adhesive (not specifically shown in FIG. 3). Accordingly, device 300 may include a separate adhesive between the screen 308 and the second housing 306. Thus, the screen 308 may be separately removable from the second housing 306, e.g., based on a second temperature threshold (e.g., higher than a first threshold release temperature associated with the thermal release adhesive 320). The first housing 302 of device 300 may be opened for servicing based on a first, lower threshold release temperature, without a need to remove the screen 308. Furthermore, a single heating element 310 may be provided, for releasing multiple different components with corresponding multiple different thermal release adhesives (i.e., heat from heating element 310 may be delivered to multiple different thermal release adhesives, including the multiple segments of thermal release adhesive 320 and an adhesive for the screen 308). In an alternate example, device 300 may include a thermally non-releasable adhesive layer. For example, a thermal release adhesive may be used between the heating element 310 and the second housing 306, and a thermally non-releasable adhesive (e.g., VHB tape) may be used in place of the thermal release adhesive 320. Thus, alternate examples may be based on a 3-part lay-up, using VHB adhesive, heating element 310, and thermal release adhesive 320.

**[0035]** The heating element 310 is shown as one continuous segment, even where corresponding portions of the thermal release adhesive 320 are missing. In an alternate example, the portions of heating element 310 corresponding to the gaps in thermal release adhesive 320 may be replaced by non-heater conductors. The heating element 310 also may be provided as separate individual heating elements to correspond to the separate individual segments of the thermal release adhesive 320. The heating element 310 is shown having conformal bulges to leave gaps for internal contours and/or components (e.g., mechanical support hinges, input/output (I/O) ports, etc.) within the device 300. The heating element 310 may provide contacts at its circuit gap for receiving

electrical energy, corresponding to the port 305 (e.g., a discreet microphone port).

**[0036]** FIG. 4A is a rear view of a device 400A including a first housing 402 and port 405 according to an example. The port 405 is a rear-facing microphone port in the first housing 402. Accordingly, the device 400A may receive electrical energy via discreetly positioned contacts within the port 405, without visually distracting from the sleek aesthetics of the device 400A.

**[0037]** FIG. 4B is a side section view of the device 400B, taken along line A-A of FIG. 4A, including the first housing 402 and a second housing 406 according to an example. The device 400B illustrates the discreet nature of the port 405 of FIG. 4A, which is not visible in FIG. 4B. Accordingly, the port 405 does not interrupt the visual language of the device 400B.

**[0038]** FIG. 4C is a side section view of the device 400C, showing further detail of the circled portion of FIG. 4B, including the first housing 402 and the second housing 406 according to an example. The first housing 402 and second housing 406 may be joined together very closely to sandwich the layers of heating element(s) and thermal release adhesive(s), without a need to thicken the device to space the housings from each other substantially to make room for the various layers. Accordingly, the first housing 402 and second housing 406 may include additional features therein, such as audio ports for providing a bass reflex air chamber or otherwise routing sounds and accommodating speakers.

**[0039]** FIG. 4D is a side section view of the device 400D, showing further detail of the circled portion of FIG. 4C, including the first housing 402 and the second housing 406 according to an example. A heating element 410 is shown sandwiched between two layers of thermal release adhesive 420. The device also includes a snap feature 403, to provide a snap-together assembly and retention between the first housing 402 and the second housing 406. A single heating element 410 may provide heat to both of the thermal release adhesives 420. In alternate examples, multiple heating elements 410 may be used. Accordingly, the thermal release adhesive 420 may be released precisely and substantially simultaneously, enabling the first housing 402 to be cleanly

separated from the second housing 406. FIG. 4D also shows the relative size difference between housing material and adhesive/heater material, illustrating the relative thinness of the heating element 410 to ensure that device 400D may remain thin and aesthetically pleasing.

**[0040]** Referring to Figure 5, a flow diagram is illustrated in accordance with various examples of the present disclosure. The flow diagram represents processes that may be utilized in conjunction with various systems and devices as discussed with reference to the preceding figures. While illustrated in a particular order, the disclosure is not intended to be so limited. Rather, it is expressly contemplated that various processes may occur in different orders and/or simultaneously with other processes than those illustrated.

**[0041]** FIG. 5 is a flow chart 500 based on releasing a thermal release adhesive according to an example. In block 510, electrical energy is applied to a heating element conformable to a coupling surface of a housing of a device. For example, the heating element may assume various levels and surfaces of a device, to simultaneously provide heat to multiple different surfaces. In block 520, heat is generated uniformly across a thermal release adhesive disposed on the coupling surface. For example, the heating element may receive electrical energy from a discreet port located on an external surface of a device housing, or may receive electrical energy from an internal battery. In block 530, the thermal release adhesive is released substantially simultaneously across the heating element, to enable disassembly of the housing. For example, the heating element may reach a first threshold thermal release temperature to disassemble the device without damaging the thermal release adhesive, while not affecting other adhesives associated with a second, higher, threshold thermal release temperature(s).

**[0042]** Examples provided herein may be implemented in hardware (e.g., a controller), software, or a combination of both. Example systems can include a controller/processor and memory resources for executing instructions stored in a tangible non-transitory medium (e.g., volatile memory, non-volatile memory, and/or computer readable media). Non-transitory computer-readable medium can be tangible and have computer-readable instructions stored thereon that

are executable by a processor to implement examples according to the present disclosure.

**[0043]** An example system (e.g., a computing device) can include and/or receive a tangible non-transitory computer-readable medium storing a set of computer-readable instructions (e.g., software) to enable a selectable menu for choosing a disassembly option, or monitoring a temperature of a heating element. As used herein, the processor can include one or a plurality of processors such as in a parallel processing system. The memory can include memory addressable by the processor for execution of computer readable instructions. The computer readable medium can include volatile and/or non-volatile memory such as a random access memory ("RAM"), magnetic memory such as a hard disk, floppy disk, and/or tape memory, a solid state drive ("SSD"), flash memory, phase change memory, and so on.

WHAT IS CLAIMED IS:

1. A device comprising:

a first housing including a coupling surface to be coupled to a second housing;

a thermal release adhesive disposed on the coupling surface; and

a heating element to uniformly heat and release the thermal release adhesive substantially simultaneously across the coupling surface, to release the second housing from the coupling surface of the first housing.

2. The device of claim 1, further comprising electrical contacts coupled to the heating element and disposed on the first housing, to receive electrical energy to energize the heating element.

3. The device of claim 2, wherein the electrical contacts are coupled to a docking interface port disposed on the first housing.

4. The device of claim 2, wherein the electrical contacts are disposed at a microphone port of the first housing, discreetly arranged so as to be substantially hidden from view while remaining externally accessible for receiving electrical energy.

5. The device of claim 2, wherein the electrical contacts are selectively coupled internally to a power supply of the device based on a switch that is mechanically actuatable.

6. The device of claim 2, wherein the electrical contacts are selectively coupled internally to a power supply of the device based on a switch that is electrically actuatable based on a selection of a user interface of the device.

7. The device of claim 1, wherein the heating element includes a first segment and a second segment electrically coupled based on a conductor extending between the first segment and the second segment.

8. The device of claim 1, wherein the heating element is a polyimide film having a thickness of less than one millimeter.

9. The device of claim 1, wherein the thermal release adhesive includes a first adhesive segment associated with a first release temperature, and a second adhesive segment associated with a second release temperature, to selectively release first and second components of the device.

10. The device of claim 1, wherein the thermal release adhesive is very high adhesive bond (VHB) adhesive tape.

11. The device of claim 1, further comprising a bias feature coupled to the first housing to apply a disassembly force between the first housing and the second housing, wherein the disassembly force is to separate the first housing from the second housing in response to release of the thermal release adhesive.

12. A device comprising:

a heating element conformable to a coupling surface of a housing of a device; and

a thermal release adhesive coupled to the heating element;

wherein the heating element is to receive electrical energy to uniformly heat and release the thermal release adhesive substantially simultaneously across the heating element.

13. The device of claim 12, wherein the thermal release adhesive is a double-sided VHB adhesive tape.

14. A method, comprising:

applying electrical energy to a heating element conformable to a coupling surface of a housing of a device;

generating heat uniformly across a thermal release adhesive disposed on the coupling surface; and

releasing the thermal release adhesive substantially simultaneously across the heating element, to enable disassembly of the housing.

15. The method of claim 14, further comprising applying the electrical energy to achieve a release temperature of the thermal release adhesive.

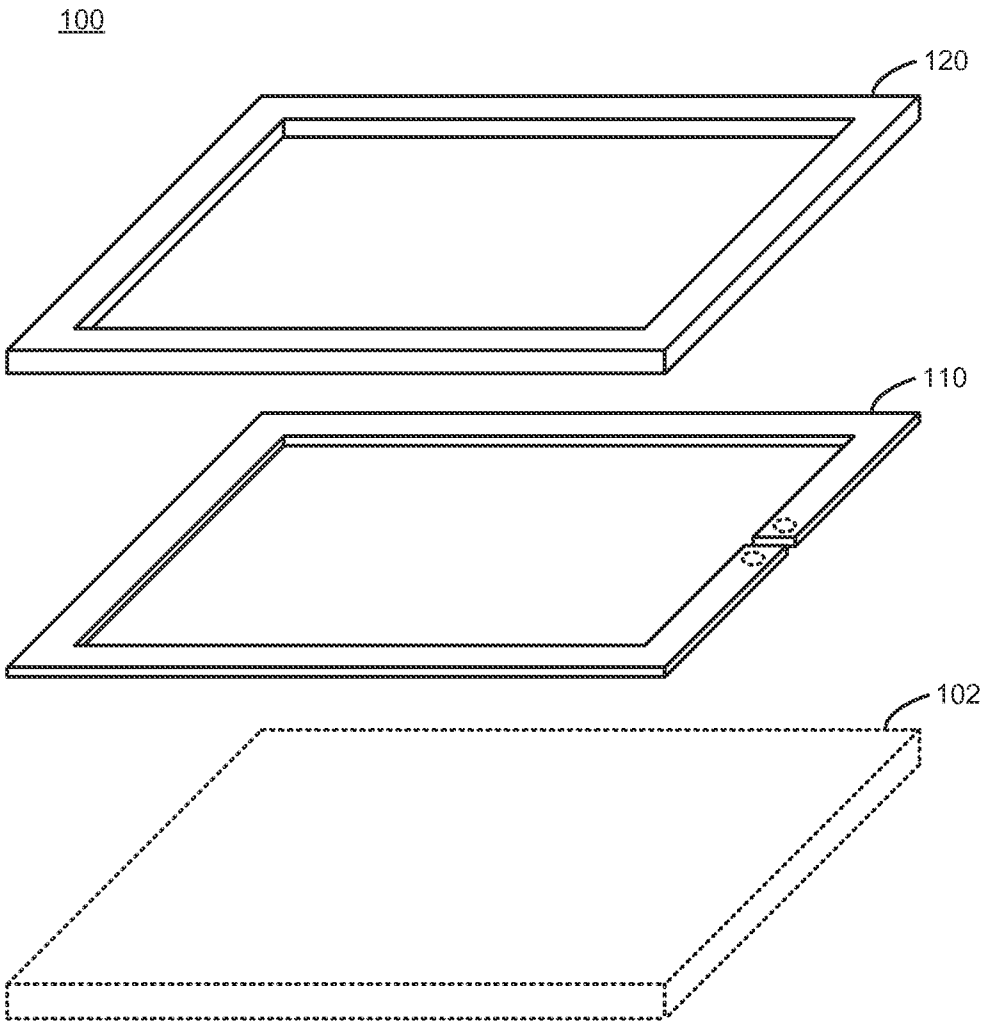


FIG. 1

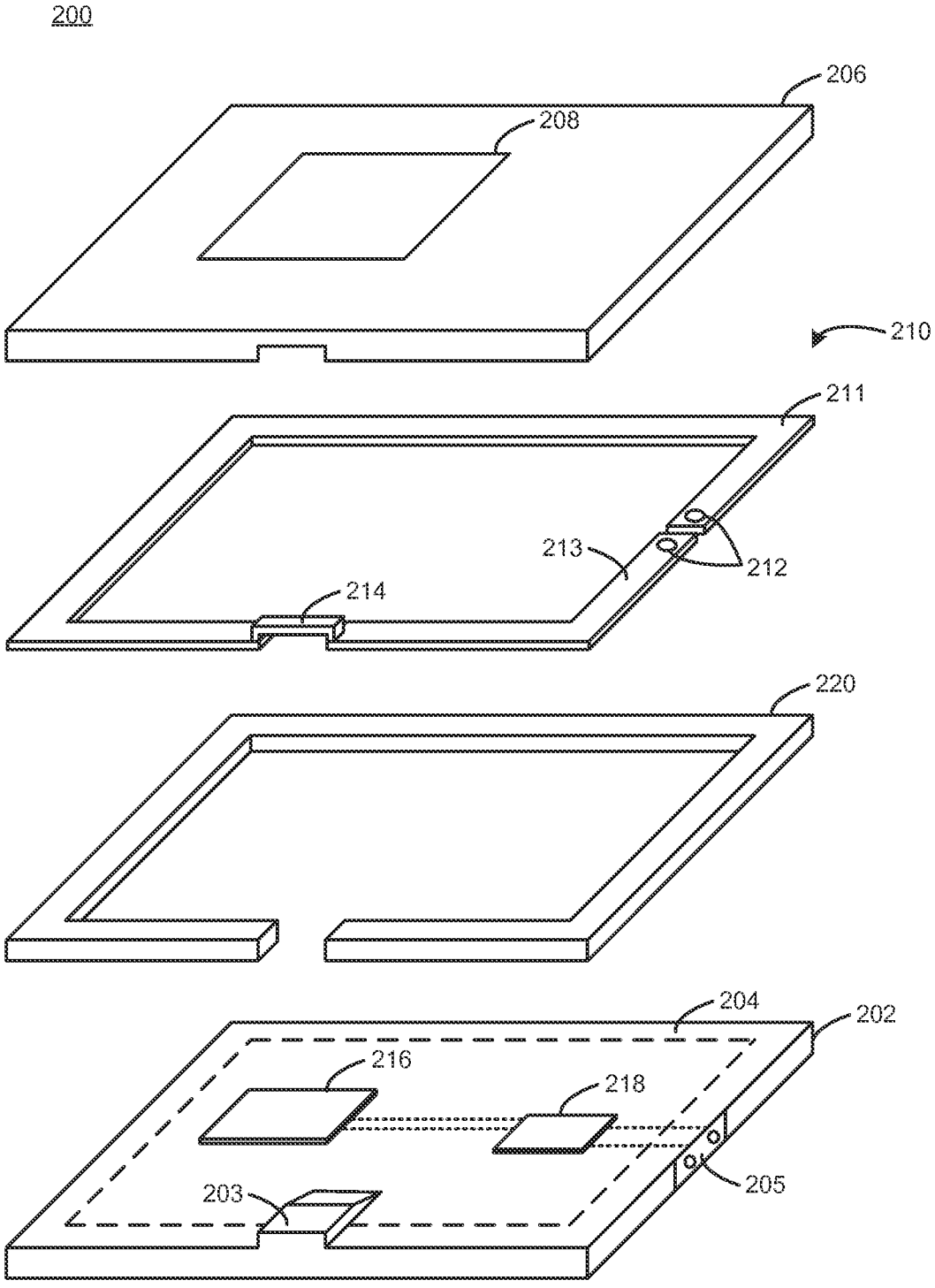


FIG. 2

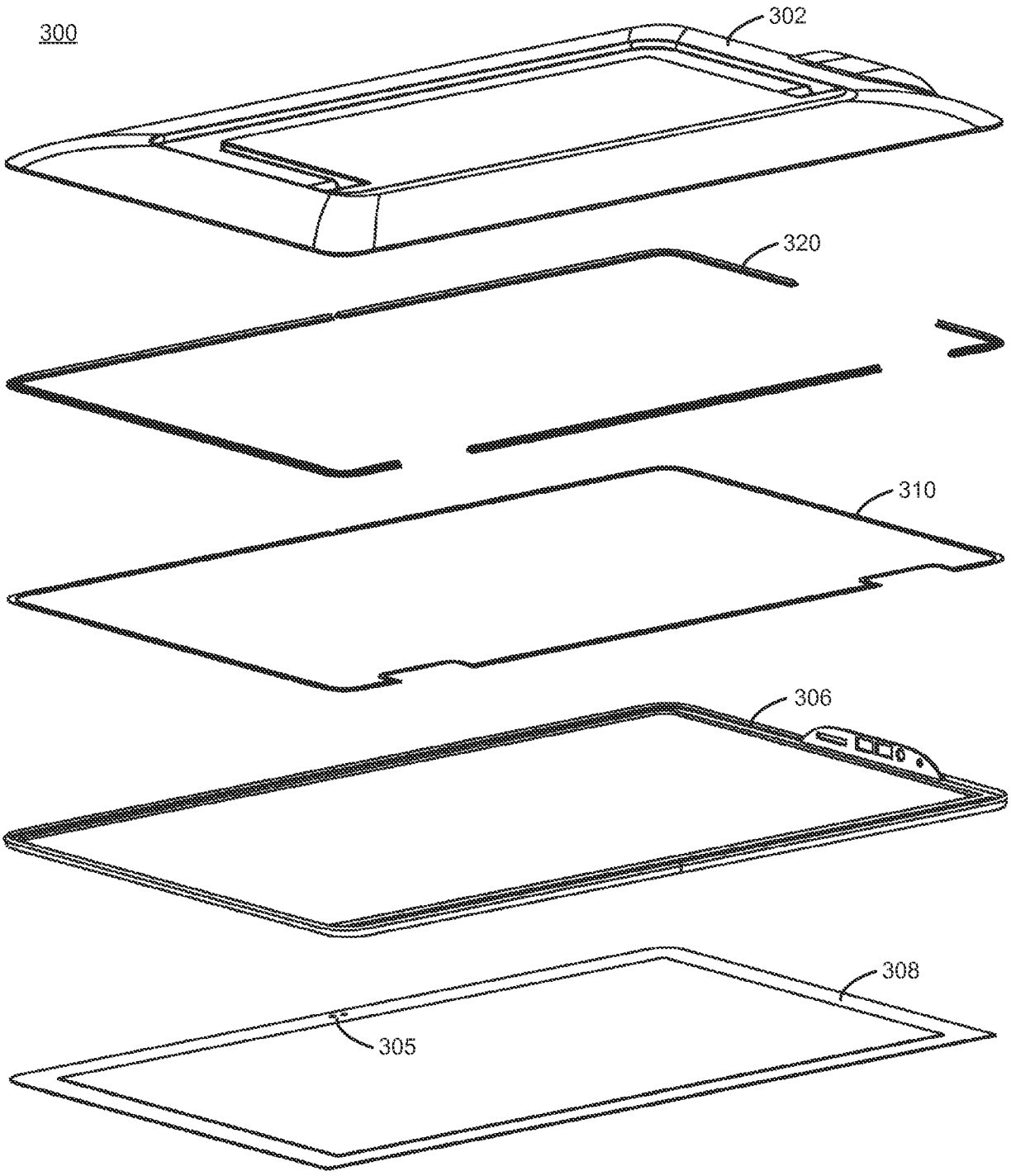


FIG. 3

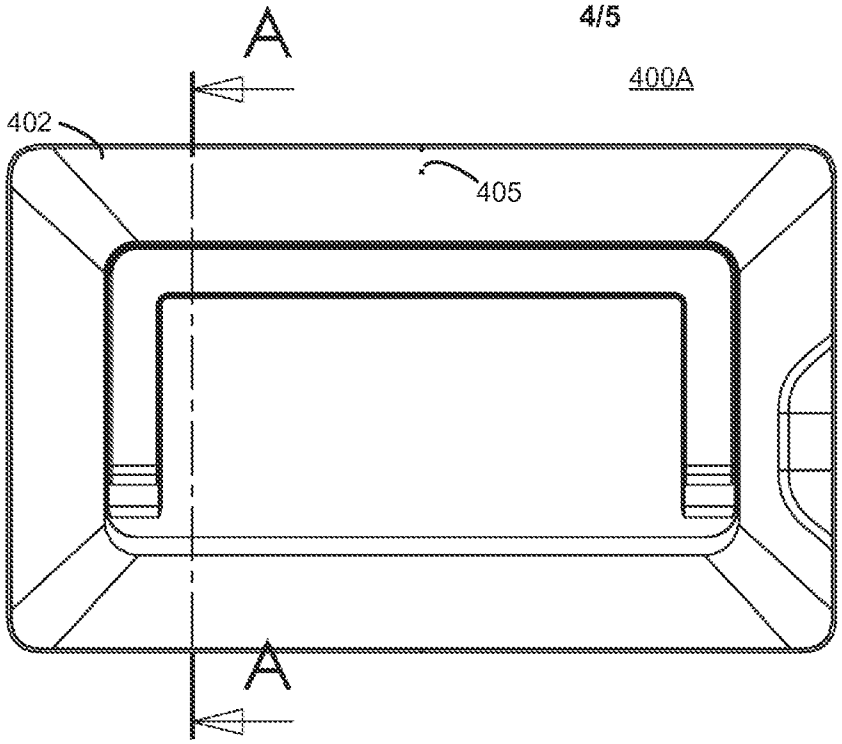


FIG. 4A

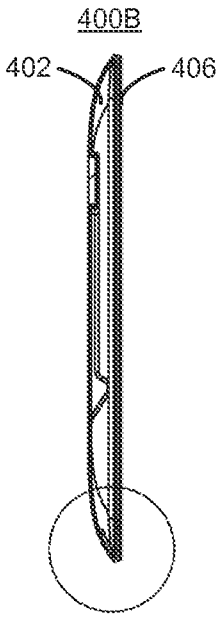


FIG. 4B

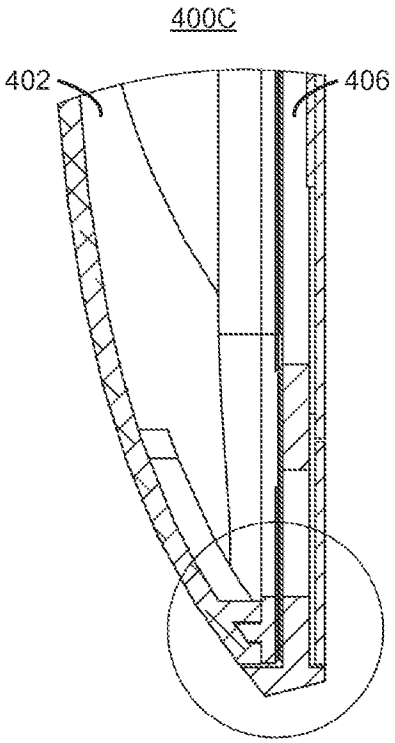


FIG. 4C

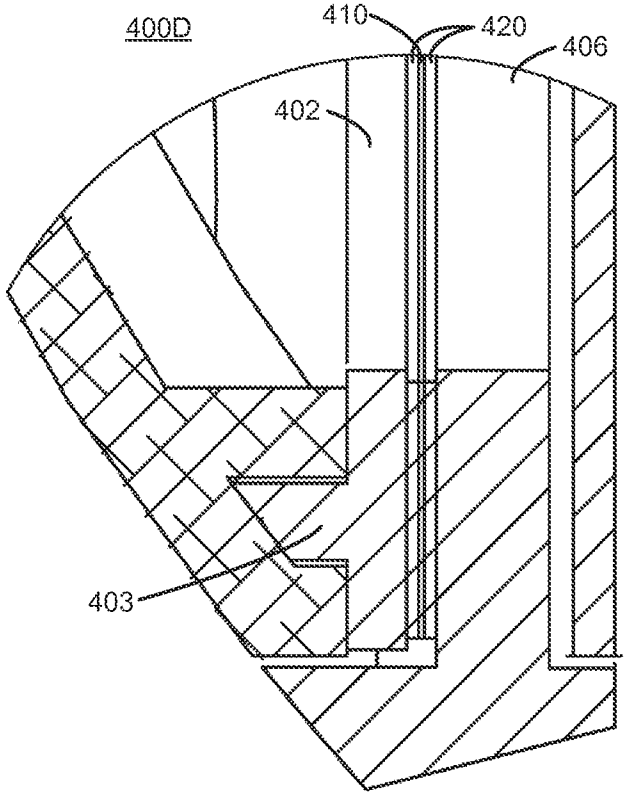


FIG. 4D

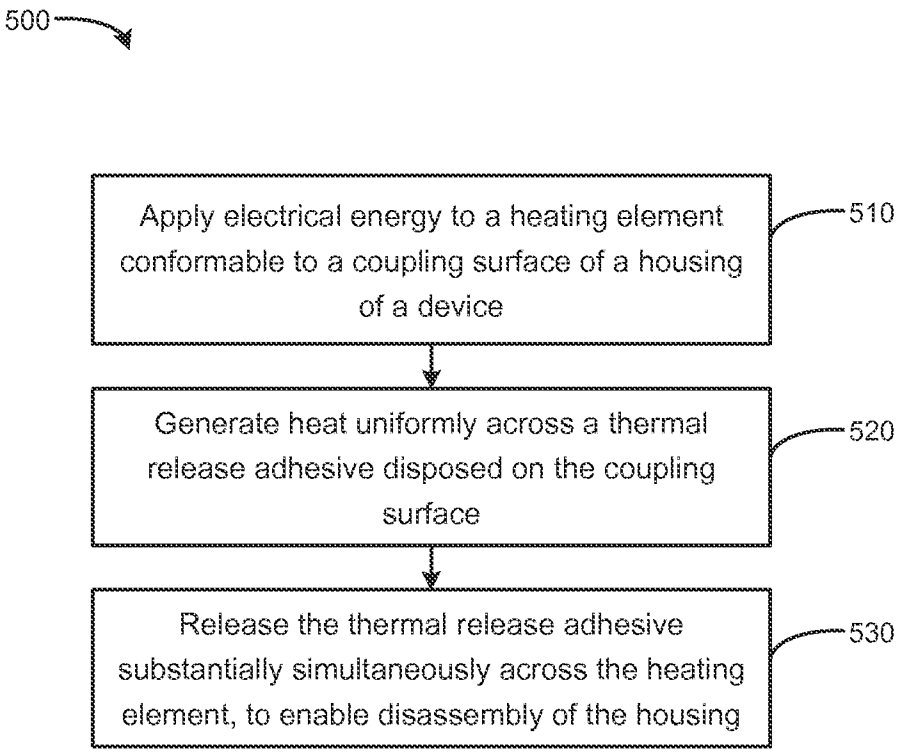
500
Apply electrical energy to a heating element conformable to a coupling surface of a housing of a device
510
Generate heat uniformly across a thermal release adhesive disposed on the coupling surface
520
Release the thermal release adhesive substantially simultaneously across the heating element, to enable disassembly of the housing
530

FIG. 5

**INTERNATIONAL SEARCH REPORT**

International application No.
**PCT/US2014/032612**

**A. CLASSIFICATION OF SUBJECT MATTER**

**G06F 1/20(2006.01)i**

According to International Patent Classification (IPC) or to both national classification and IPC

**B. FIELDS SEARCHED**

Minimum documentation searched (classification system followed by classification symbols)
G06F 1/20; G09F 9/00; C09J 5/08; B23P 19/04; H04N 5/64; B32B 5/16; C09J 7/02; B32B 3/10; C09J 133/08; H05K 5/02

Documentation searched other than minimum documentation to the extent that such documents are included in the fields searched
Korean utility models and applications for utility models
Japanese utility models and applications for utility models

Electronic data base consulted during the international search (name of data base and, where practicable, search terms used)
eKOMPASS(KIPO internal) & keywords: housing, coupling surface, thermal release adhesive, heating element, disassembly

**C. DOCUMENTS CONSIDERED TO BE RELEVANT**

| Category* | Citation of document, with indication, where appropriate, of the relevant passages | Relevant to claim No. |
|---|---|---|
| X | JP 2013-038791 A (NITTO DENKO CORP.) 21 February 2013<br>See abstract; paragraphs [0021]-[0036]; claim 1; and figures 3-5. | 1-15 |
| A | US 2008-0145646 A1 (KATSUJI EBISU et al.) 19 June 2008<br>See paragraphs [0037]-[0040]; and figures 2a-2b. | 1-15 |
| A | JP 2008-517085 A (TESA AG) 22 May 2008<br>See paragraphs [0009]-[0014]; and figures 1-3. | 1-15 |
| A | US 2010-0021668 A1 (DAISUKE SHIMOKAWA et al.) 28 January 2010<br>See paragraphs [0101]-[0104]; and figure 3. | 1-15 |
| A | KR 10-2009-0080073 A (NITTO DENKO CORP.) 23 July 2009<br>See abstract; paragraphs [0018]-[0020]; and claim 1. | 1-15 |

☐ Further documents are listed in the continuation of Box C.

☒ See patent family annex.

* Special categories of cited documents:
"A" document defining the general state of the art which is not considered to be of particular relevance
"E" earlier application or patent but published on or after the international filing date
"L" document which may throw doubts on priority claim(s) or which is cited to establish the publication date of another citation or other special reason (as specified)
"O" document referring to an oral disclosure, use, exhibition or other means
"P" document published prior to the international filing date but later than the priority date claimed
"T" later document published after the international filing date or priority date and not in conflict with the application but cited to understand the principle or theory underlying the invention
"X" document of particular relevance; the claimed invention cannot be considered novel or cannot be considered to involve an inventive step when the document is taken alone
"Y" document of particular relevance; the claimed invention cannot be considered to involve an inventive step when the document is combined with one or more other such documents,such combination being obvious to a person skilled in the art
"&" document member of the same patent family

| Date of the actual completion of the international search | Date of mailing of the international search report |
|---|---|
| 29 December 2014 (29.12.2014) | **30 December 2014 (30.12.2014)** |

Name and mailing address of the ISA/KR
International Application Division
Korean Intellectual Property Office
189 Cheongsa-ro, Seo-gu, Daejeon Metropolitan City, 302-701,
Republic of Korea
Facsimile No. +82-42-472-7140

Authorized officer
LEE, Dong Yun
Telephone No. +82-42-481-8734

**INTERNATIONAL SEARCH REPORT**

Information on patent family members

International application No.
**PCT/US2014/032612**

| Patent document cited in search report | Publication date | Patent family member(s) | Publication date |
|---|---|---|---|
| JP 2013-038791 A | 21/02/2013 | JP 05525017 B2 | 18/06/2014 |
| US 2008-0145646 A1 | 19/06/2008 | JP 2008-142674 A | 26/06/2008 |
| JP 2008-517085 A | 22/05/2008 | AT 412503 T | 15/11/2008 |
| | | DE 102004050949 A1 | 20/04/2006 |
| | | DE 502005005832 D1 | 11/12/2008 |
| | | EP 1814703 A1 | 08/08/2007 |
| | | EP 1814703 B1 | 29/10/2008 |
| | | ES 2314712 T3 | 16/03/2009 |
| | | WO 2006-042782 A1 | 27/04/2006 |
| US 2010-0021668 A1 | 28/01/2010 | JP 2008-144116 A | 26/06/2008 |
| | | TW 200835768 A | 01/09/2008 |
| | | WO 2008-072462 A1 | 19/06/2008 |
| KR 10-2009-0080073 A | 23/07/2009 | CN 101535436 A | 16/09/2009 |
| | | EP 2080793 A1 | 22/07/2009 |
| | | EP 2080793 B1 | 29/08/2012 |
| | | JP 05235294 B2 | 10/07/2013 |
| | | JP 2008-120903 A | 29/05/2008 |
| | | US 2010-0075129 A1 | 25/03/2010 |
| | | WO 2008-056788 A1 | 15/05/2008 |