Nov. 17, 1970 J. E. MAAS 3,541,288

SPLASH-PROOF ELECTRICAL SWITCH

Filed Jan. 27, 1969

FIG. 1

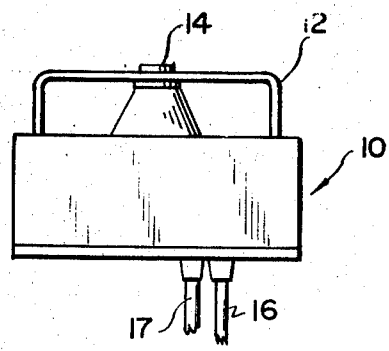

FIG. 3

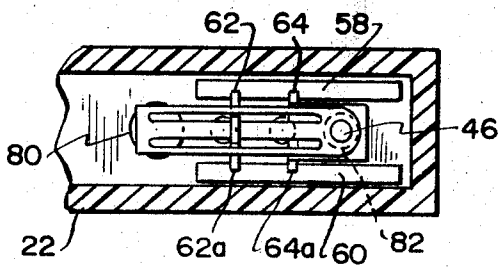

FIG. 2

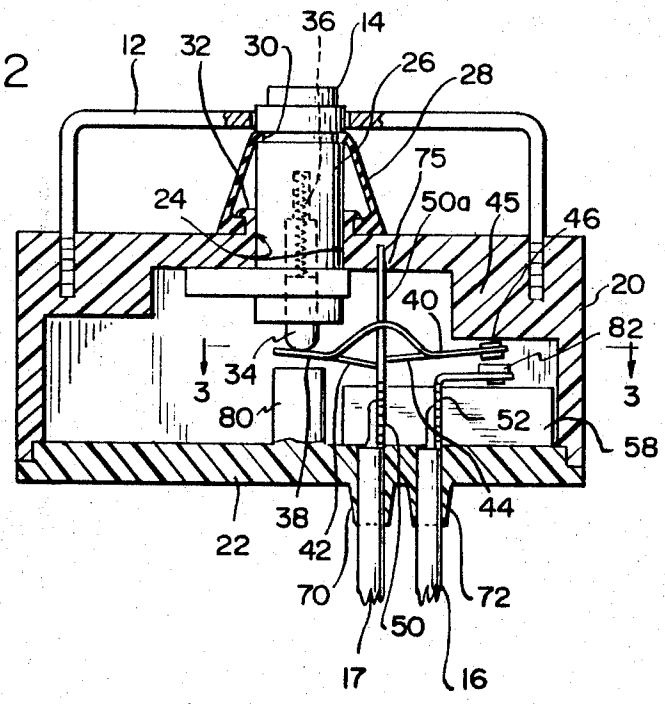

FIG. 4

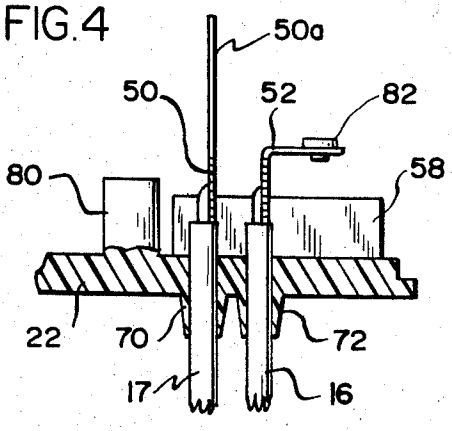

INVENTOR.
JOHN E. MAAS

BY Mueller, Aichele & Rauner

ATTORNEYS.

United States Patent Office 3,541,288 Patented Nov. 17, 1970

3,541,288

SPLASH-PROOF ELECTRICAL SWITCH

John E. Maas, Valparaiso, Ind., assignor to McGill Manufacturing Company, Inc., Valparaiso, Ind., a corporation of Indiana

Filed Jan. 27, 1969, Ser. No. 794,287
Int. Cl. H01h 9/04
U.S. Cl. 200—168 7 Claims

ABSTRACT OF THE DISCLOSURE

A splash-proof electrical switch which includes a single piece molded housing having a removable base portion that snaps into place on the housing to seal the same against moisture. The switch terminals are mounted to the base portion by inserting leads connected to the respective terminals through resilient sleeve portions of thin cross-section integrally molded to the base portion and pulling the terminals into corresponding slots in wall supports also molded integral with the base. Each of the leads are constrained by the resilient sleeve portion to prevent moisture from entering the switch at the point where the leads exit the base.

BACKGROUND OF THE INVENTION

This invention pertains to a splash-proof electrical switch.

In many operating installations, for instance washing machines and dishwashers, it is desirous to have electrical switches which are splashproof. One of the big problems with such switches is the difficulty encountered in trying to seal the housing at the point where the wires extend therethrough to connect to the switch terminals. Many of the structures which have been proposed to solve this problem are complicated and expensive to manufacture mainly because they are so difficult to assemble.

SUMMARY OF THE INVENTION

It is an object of this invention to provide an improved electrical switch wherein the switch terminals can be rapidly assembled within the switch housing.

It is another object of this invention to provide a splash-proof electrical switch wherein the switch terminals are easily mounted within the switch housing and the leads connected thereto are extended through the housing to seal the same from moisture in a simple and inexpensive manner.

In one embodiment of this invention, a switch housing has a removable base portion on which are integrally molded first and second wall portions. The wall portions each have first and second grooves therein and are positioned in a spaced relation to one another such that the switch terminals are supportedly mounted to the base by inserting each terminal in corresponding grooves in the wall portions. Intermediate the wall portions are sleeve portions integrally molded with the base portion and having a thin cross-section that imparts a resilient characteristic to the same. The sleeve portions provide access to the housing for connecting the leads to the terminals. In assembling the switch, the leads are pulled through the resilient sleeve portions and are constrained thereabout by the sleeves to seal the housing from moisture. By pulling tightly on the leads the terminals are seated in the corresponding grooves in the wall portions which support the same on the base. The base portion is then welded into position and the inside of the housing is sealed from moisture.

DESCRIPTION OF THE DRAWING

FIG. 1 is a side elevation view of the splash-proof switch in accordance with this invention;

FIG. 2 is a side elevation view in cross-section of the electrical switch of FIG. 1;

FIG. 3 is a partial plan view in cross-section taken along the lines 3—3 of FIG. 2; and

FIG. 4 is a portion of the side elevation view in cross-section of the switch shown in FIG. 2.

DETAILED DESCRIPTION

Referring to FIG. 1, there is shown a splash-proof switch **10** used for mounting for instance in a washing machine. Pressed into the plastic body is a mounting bracket **12**. Actuation of the pushbutton **14** of the switch connects the leads **16** and **17** to complete the circuit.

FIG. 2 illustrates the construction of the switch in detail. Essentially the switch comprises a molded housing **20**, which has a removable base portion **22** that can be ultrasonically welded to the bottom of the housing to hold the same in position and seal the housing from moisture. An aperture **24** extends through the top of the housing and provides access for the switch plunger **26**. A rubber boot **28** fits tightly about the recessed portion **30** of the plunger and is connected to flange portion **32** of the housing to prevent moisture from entering the housing through the aperture **24**. A foot portion **34** is slidably mounted within the plunger and is spring loaded, by spring **36**, against the end **38** of the metallic switch bridge **40**. An electrical conductive rivet **46** extends through the other end of the bridge and serves as one of the switch contacts. The switch bridge **40** also includes first and second spring legs **42** and **44** respectively.

The terminals **50** and **52** have leads **17** and **16**, respectively welded thereto. As shown in FIG. 3, integrally molded with the base portion are first and second wall portions **58** and **60**. The wall portions extend in a parallel, spaced relation to one another. Each wall portion has first and second grooves **62**, **64** and **62***a*, **64***a*. Each of the corresponding grooves **62**, **62***a* and **64**, **64***a* form a slot for receiving one of the terminals **50** and **52**. Also integrally molded to the base portion **22**, as best shown in FIG. 4, are integral sleeve portions **70** and **72**. The sleeve portions are frusto-conical in shape and have a cross-section considerably thinner than the wall portions such that they are resilient. Each of the sleeves **70** and **72** opens into the base portion **22** intermediate the wall portions **58** and **60** and are in a spaced relation to the terminals **50** and **52**, with the same being positioned in their respective slots.

Assembly of the terminals to the base portion is rapid and efficient. The leads **17** and **16** are drawn through their respective sleeve portions **70** and **72** until the terminals **50** and **52** are seated in the slots and wedged tightly therein. In this position, the wall portions **58** and **60** support the terminals on the base portion **22**. Each of the wires **16** and **17** are constrained thereabout by the resilient sleeves **70** and **72** such that moisture cannot creep between the wire and the sleeve and enter the housing.

To complete the switch construction the terminal **50** has an extended portion **50***a*. When the base **22** is welded onto the housing **20**, the extended portion **50***a* fits into a notch **75** molded into the top of the housing. The extended portion **50***a* serves as a fulcrum, and the spring legs **42** and **44** of the bridge **40** are fitted to the fulcrum. Hence, pushing the plunger **26** engages the foot **34** with the end **38** of the bridge **40** and pushes that end of the bridge against the face of the anvil **80** which is also molded to base **22**. The rivet **46** on the other end of the bridge engages the extended portion **45** of the housing when pressure is applied to end **38** thereby applying tension

to the bridge. Initially, when the foot **34** engages the end **38** the tension of the bridge and the spring **36** is substantially equal so the entire plunger **26** moves downward without compressing spring **36**. When the end **38** hits anvil **80** the plunger can still move downward but the foot portion **34** is no longer free to move and compresses spring **36**, thereby providing the switch with an overtravel feature. When the plunger is released the spring returns the plunger to its unactuated position. Movement of the end **38** of the bridge with the rivet **46** engaging portion **45** of the housing causes the spring portions **38** and **44** to snap the contact **46** against the face of conducting rivet **82** that is mounted on the end of terminal **52**. This completes the circuit between the wires **16** and **17**. When the plunger is released, the spring legs react to disengage the contact and open the switch.

It can be seen that with the base portion **22** welded to housing **20** and by use of the rubber boot **28** and unique sleeve portions **70** and **72**, which constrain the wires **16** and **17**, the switch is completely splash-proof and therefore readily adaptable for use in connection with a liquid environment. Furthermore, the switch can be readily and economically assembled.

I claim:

1. A splash-proof electrical switch having actuating means operable to selectively bridge a pair of terminals having leads connected thereto to complete a circuit, the combination including, a housing, a wall portion removably connected to said housing, said wall portion having integral terminal mounting means and first and second resilient sleeve portions extending therefrom, each said terminal received by said terminal mounting means to support the same on said wall portion, and each said lead extending through and being constrained thereabout by said sleeve portion, said wall portion connected to said housing sealing the same.

2. The switch of claim **1** wherein said sleeve portions are frusto-conical in shape, have a cross-section thinner than said wall portion, and are integrally molded to the same.

3. The switch of claim **1** wherein said terminal mounting means includes first and second integrally molded wall portions positioned in a spaced relation to one another, each said wall portion having first and second grooves therein, each said terminal slidably fitted into corresponding grooves in said wall portions and being supported thereby, with each said lead thereof extending through an adjacent sleeve portion.

4. A splash-proof electrical switch, including in combination, a housing having an aperture therein and including a removable base portion, a spring loaded plunger extending through the aperture in said housing, a boot surrounding said plunger and seated on the housing sealing the aperture therein from moisture, first and second terminals each having a lead connected thereto, terminal

mounting means connected to said base portion, first and second resilient sleeve portions extending through said base portion, said terminals fixed to said base portion by said terminal mounting means, and said leads connected thereto each extending through and being constrained by respective sleeve portions sealing moisture from said housing with said base portion in position thereon, and bridge means actuated by said plunger for bridging said terminals to complete the circuit between said leads.

5. The splash-proof electrical switch of claim **4** wherein said first terminal includes a portion extending from the terminal mounting means to a wall of said housing forming a fulcrum, and said bridge means includes a metallic bridge having first and second spring legs, each said leg being connected to said fulcrum, the combination further including, one end of said metallic bridge having a first contact portion thereon and the other end engaging said plunger, and said second terminal having a second contact portion thereon, with said plunger moving said bridge said spring legs acting to move said first contact portion into engagement with said second contact portion to complete the circuit between said leads.

6. The splash-proof electrical switch of claim **4** wherein said terminal mounting means includes first and second wall portions integrally molded to said base portion, each wall portion having first and second corresponding grooves therein forming first and second slots for receiving said terminals and supporting the same on said base portion, and the opening of each said sleeve portion positioned intermediate said first and second wall portions and in a spaced relation to said terminals supported thereby, and each said lead connected to a terminal passes through a respective sleeve portion and is constrained thereabout sealing said housing from moisture.

7. The switch of claim **2** wherein said terminal mounting means includes first and second integrally molded wall portions positioned in a spaced relation to one another, each said wall portion having first and second grooves therein, each said terminal slidably fitted into corresponding grooves in said wall portions and being supported thereby, with each said lead thereof extending through an adjacent sleeve portion.

References Cited

UNITED STATES PATENTS

2,629,791	2/1953	Tourneau.
2,785,251	3/1957	Cassioy.
2,795,678	6/1957	Mertler.
3,037,099	5/1962	Aandewiel.
3,152,472	10/1964	Munn et al.
3,385,945	5/1968	Tums.
3,431,378	3/1969	Hellman.
3,478,857	11/1969	Linker.

HERMAN O. JONES, Primary Examiner