Oct. 29, 1946. D. DALIN 2,410,017

FLUID COOLED DAMPER

Filed Aug. 14, 1943 2 Sheets-Sheet 1

Fig. 3

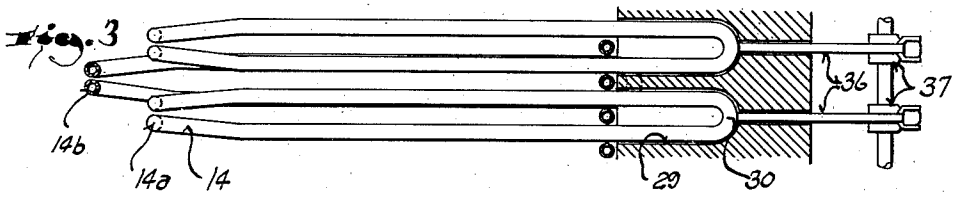

Fig. 1

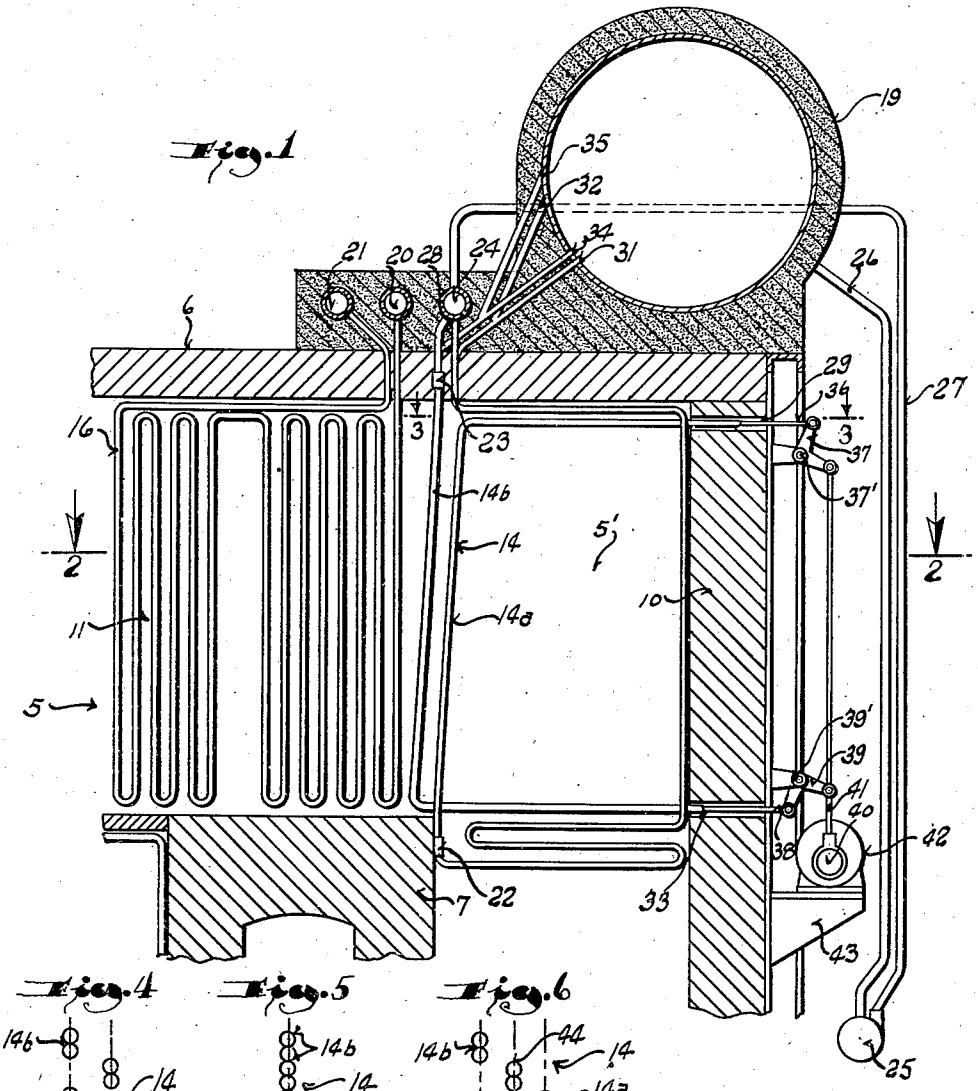

Fig. 4

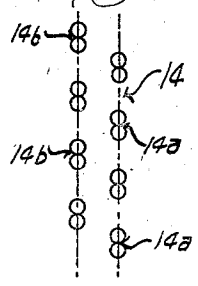

Fig. 5

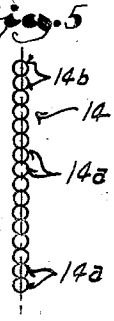

Fig. 6

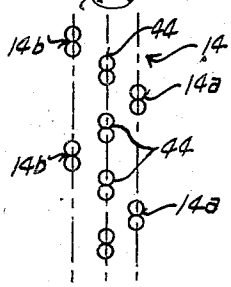

Inventor
David Dalin
By Ira Milton Jones
Attorney

Oct. 29, 1946. D. DALIN 2,410,017

FLUID COOLED DAMPER

Filed Aug. 14, 1943 2 Sheets-Sheet 2

Fig. 2

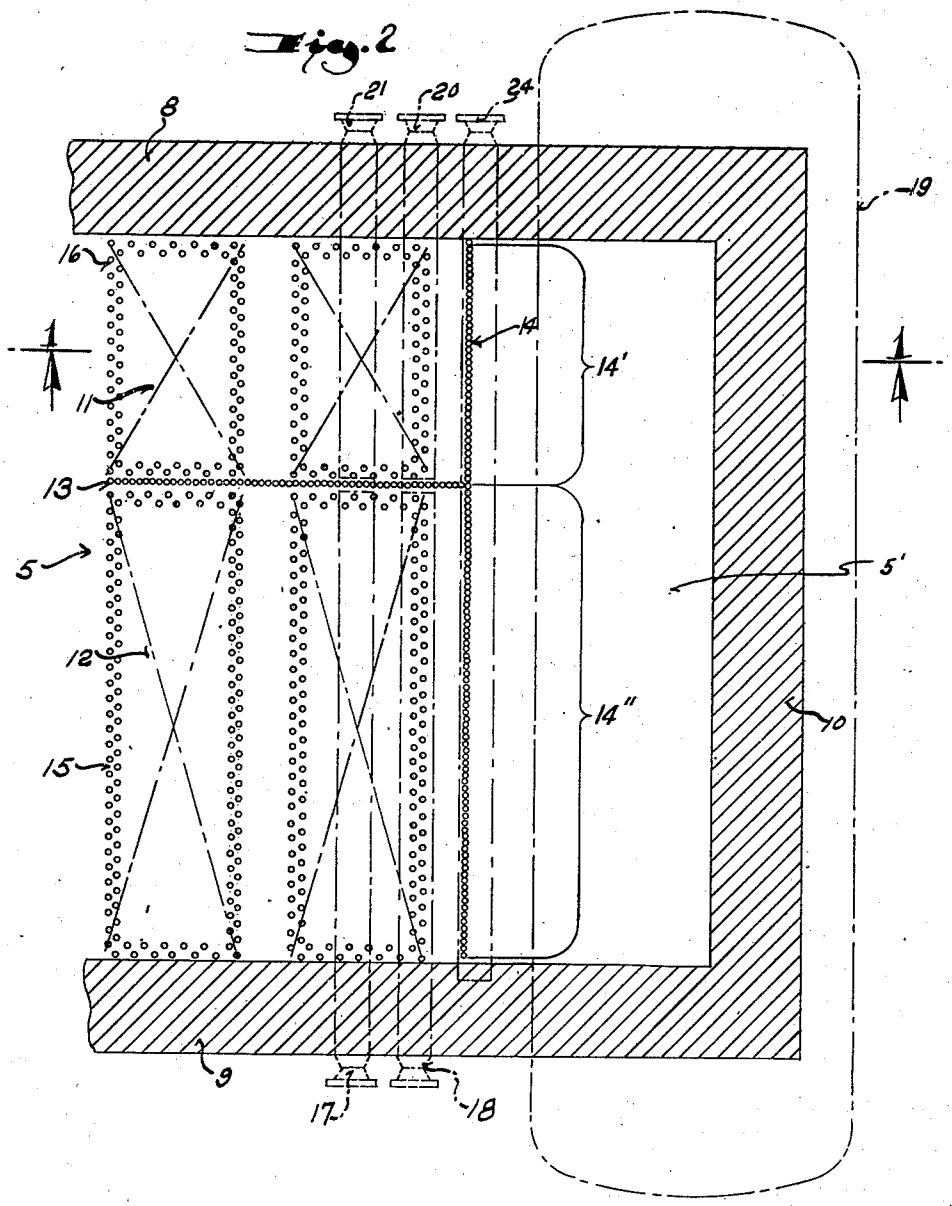

Inventor
David Dalin
By Dr. Hilton Jones
Attorney

Patented Oct. 29, 1946

2,410,017

UNITED STATES PATENT OFFICE

2,410,017

FLUID COOLED DAMPER

David Dalin, Sodertalje, Sweden

Application August 14, 1943, Serial No. 498,697
In Sweden September 16, 1941

10 Claims. (Cl. 122—480)

1

This invention relates to heat exchange apparatus and refers particularly to steam generating plants equipped with superheaters.

In equipment of this type it is desirable that the steam be maintained at a predetermined temperature regardless of the demands upon the plant and possibly varying furnace conditions.

This is done, as it has been to some degree in the past, by locating the superheater in one of two parallel but separate gas passes or passageways connected between a source of hot gases and a receiving gas pass and controlling the flow of hot gases through the two passes. Thus the effect of the hot gases upon the superheater located in one of the parallel gas passes and another heat exchanger located in the other gas pass or passes may be varied as required to maintain the superheated steam at a predetermined temperature regardless of variations in quantity and pressure of the steam, it being understood that the hot gases which are not required to maintain the desired temperature of the superheated steam flow through the other gas pass in which the other heat exchanger is located without lowering the overall heat exchange efficiency of the combined unit.

While attempts have been made in the past to control the flow of hot gases in a steam boiler by means of dampers, these past expedients were objectionable in that the damper means they employed were incapable of withstanding the extreme temperatures prevalent in equipment of this character.

It is, therefore, another object of this invention to provide an improved manner of providing a damper or shutter construction for controlling the flow of gases through a gas pass which is so designed as to be fluid cooled and thereby capable of withstanding excessively high temperatures.

A further object of this invention is to provide a damper construction for controlling the flow through a gas pass of a boiler or other heat exchange apparatus which comprises a multiplicity of fluid cooled tubes so arranged in the gas pass that movement thereof with respect to each other may be readily affected by control instrumentalities on the exterior of the gas pass while the apparatus is in service.

Another object of this invention is to provide an adjustable damper for controlling the flow through a gas pass which comprises a bank of fluid cooled tubes so mounted so that at least some of the tubes may be flexed to alter their

2

positions with respect to adjacent tubes and thus control the flow of gases through the pass.

Still another object of this invention is to provide an adjustable damper of the character described which lends itself readily to the control of a plurality of adjacent though separate passageways.

A further object of this invention is to provide an adjustable barrier of the character described composed of a plurality of adjacent fluid cooled tubes so mounted and arranged that adjacent tubes may be readily flexed in opposite directions to thereby accomplish substantially uniform spacing between the tubes throughout their entire length so that gas flow through the damper is uniformly distributed over the entire area of the damper.

Another important object of this invention is to utilize the adjustable barriers, or more specifically the bank of tubes constituting the barriers, as part of the heat exchanger unit in such a way that these banks of tubes serve the dual purpose of providing an adjustable barrier and part of the heat exchanger surface of the entire unit to thereby reduce the size and weight of the unit.

With the above and other objects in view which will appear as the description proceeds, this invention resides in the novel construction, combination and arrangement of parts substantially as hereinafter described and more particularly defined by the appended claims, it being understood that such changes in the precise embodiment of the hereindisclosed invention may be made as come within the scope of the claims.

The accompanying drawings illustrate two complete examples of the physical embodiment of the invention constructed in accordance with the best modes so far devised for the practical application of the principles thereof, and in which:

Figure 1 is a vertical sectional view through a portion of a steam generating plant embodying this invention, said view being taken on the plane of the line 1—1 of Figure 2;

Figure 2 is a horizontal sectional view taken on the plane of the line 2—2 in Figure 1;

Figure 3 is a fragmentary detail view taken on the plane of the line 3—3 in Figure 1;

Figure 4 is a view diagrammatically illustrating the adjustable damper or shutter in its open position;

Figure 5 is a view similar to Figure 4 but

showing the adjustable damper or shutter closed; and

Figure 6 is a view similar to Figure 4 illustrating a slightly modified arrangement of the tubes comprising the adjustable damper or shutter.

Referring now particularly to the accompanying drawings in which like numerals indicate like parts, the numeral 5 designates a gas pass of a steam generating plant or other heat exchange apparatus, defined by fixed walls 6, 7, 8, 9, and 10. While the specific shape of the gas pass has no bearing upon the invention, it may be right angular, as shown, with its horizontal portion into which the hot combustion gases are fed from the heat source, not shown, divided into two chambers or passages 11 and 12 by a vertical wall 13. Both chambers have communication with the vertical outlet portion 5' of the gas pass and thus are connected in parallel between the source of hot gases and the outlet portion 5'. Flow through these parallel paths is controlled by an adjustable damper 14 which extends across the full width of the gas pass, i. e., across both of the two parallel chambers or passages 11 and 12 and constitutes the chief feature of this invention. That section of the damper 14, which separates the chamber or passage 11 from the outlet portion of the gas pass and which is designated 14', is adapted to be controlled separately from its remaining section 14'', which controls the flow through the chamber or passage 12.

The vertical wall 13 which separates the chambers 11 and 12 may be a bank of fluid cooled tubes, or, as shown in Figure 7, it may be part of the brick work of the boiler.

The chamber 12 has a heat exchanger 15 mounted therein which may be the superheater of the boiler and the chamber 11 has a heat exchanger 16 mounted therein which may constitute another steam superheater or provide means for heating some other fluid medium. The coils of the heat exchanger 15 are connected with a distributing header 17 and a collecting header 18, the former being connected to a steam dome 19 through suitable connections, not shown.

The heat exchanger 16 has its coils connected to a distributing header 20 and a collecting header 21. Suitable means, not shown, connect the headers 20 and 21 in the circuit through which the fluid medium to be heated by the exchanger 16 flows. The specific manner in which the heat exchangers 15 and 16 are connected in their respective circuits, however, does not constitute any part of this invention.

The adjustable damper or shutter indicated generally by the numeral 14 may take several different forms as shown in the drawings. In that embodiment of the invention illustrated in Figures 1 and 2 it comprises a bank or wall of fluid cooled tubes which collectively forms a barrier extending entirely across the gas pass to throttle the flow of gases through both its chambers or passages 11 and 12 with an effectiveness depending upon the spacing between the adjacent tubes.

In fully closed condition, illustrated in Figure 5, the tubes occupy substantially a common plane and lie closely adjacent to each other. In addition to being divided into the two sections 14' and 14'' all of the tubes are arranged in at least two groups and, if desired, three groups as shown in Figure 6. In any event the tubes are so arranged and mounted that they may be displaced with respect to each other to increase and decrease the spacing therebetween and thus regulate the flow of gases through the two chambers or passages of the gas pass.

It is, of course, obvious that by so regulating the flow of gases through the gas pass the effect thereof on the heat exchangers 15 and 16 is proportionately varied.

Where the tubes are divided into two groups as shown in Figure 4 the tubes of one group designated *14a* have their upper ends free and their lower end portions fixed as at 22, while the tubes *14b* constituting the other group have their lower ends free and their upper ends fixed as at 23. Thus, the spacing between adjacent tubes of the two groups may be varied substantially uniformly for their entire length by simultaneously flexing the tubes of the two groups in opposite directions. In this manner gas flow through the barrier is substantially uniform over its entire area.

All of the tubes of the adjustable barrier are supplied with a water-steam emulsion from a distributing header 24 into which the water-steam emulsion is forced by a pump 25. The inlet of the pump is connected to the steam dome 19 by a line 26 and the outlet thereof is connected by line 27 with the distributing header 24.

As shown in Figure 3 the tubes of the two groups are disposed alternately in pairs with each pair constituting a loop. Thus each pair of tubes constituting the *a* group (those which have their upper ends free) have one end connected to the distributing header 24 as at 28. From this point of connection to the distributing header the coil extends down into the gas pass and then follows the ceiling wall 6 thereof to a point adjacent to the wall 10. Here the coil continues down along the end wall 10 at a point beneath the bottom of the horizontal stretch of the gas pass to enter the outlet portion of the pass where the coil is doubled back and forth serpentine fashion to extend across the outlet portion of the gas pass and be secured as at 22 to the adjacent wall thereof.

From this point the coil continues to form one of the pair of tubes being considered extending upwardly to a point near the ceiling of the gas pass and then horizontally toward and into an opening 29 in the end wall 10. The portion of the coil within the opening 29 is looped back on itself at 30 (see Figure 3) and doubling back on itself follows right along the path just traced so as to provide the second of the pair of tubes (*14a*) being considered. This end portion of the coil follows along behind the end portion connected to the distributing header 24 but before reaching the same branches off to an outlet line 31 into the lower portion of the steam dome or as alternate outlet line 32 into the upper portion of the steam dome.

The tubes of the *b* group are similarly arranged in pairs consisting of looped coils and similarly fed from the distributing header 24.

For this purpose one leg of each coil loop comprising the *b* group is connected to the distributing header and then extends down through the ceiling 6 where it is anchored as at 23. From this point it continues down substantially in the plane of the *a* group to a point adjacent to the bottom of the horizontal stretch of the gas pass where it is bent to extend horizontally across the outlet of the gas pass and enter an opening or cavity 33 in the end wall 10 similar to the opening 29.

Within this opening 33 the coil is doubled back on itself in the same way as the looped portion

30 to follow the previously traced path back across the outlet of the gas pass and vertically across the horizontal portion of the gas pass to again enter the ceiling 6 and through discharge line 34 or its alternate discharge line 35 connect with the steam dome.

The looped ends of the coils received in the openings 29 are connected by links 36 with bell crank levers 37, while the loops of the coils received in the openings 33 are connected by links 38 with bell crank levers 39. The projection of the looped ends of the coils into the wall 10 more or less insulates the links 36 and 38 from the direct influence of hot gases flowing within the gas pass.

The bell crank levers 37 and 39 are fixed to cross shafts 37' and 39' suitably journalled on the exterior of the wall 10. These cross shafts are adapted to be simultaneously rocked by an eccentric 40 connected to both sets of bell crank levers by a link 41. A motor 42 mounted on a bracket 43 fixed to the exterior of the end wall 10 drives the eccentric. It is, of course, to be understood that a separate set of bell crank levers with their connections to the loops of the tubes and their driving motor is provided for each section of tubes 14' and 14''. This enables separate control of the gases flowing through the chambers or passages 11 and 12 to the end that diminution of flow through one chamber or passage may be accompanied by an increased flow through the other and vice versa. The motors 42 (only one of which is shown) are adapted to be controlled by impulses derived from controlling instrumentalities, not shown, which in turn are regulated by the temperature of the superheated steam or any other suitable control factor so that the adjustable damper or shutter sections 14' and 14'' govern the flow of gases through the chambers or passages 11 and 12 of the gas pass to maintain a predetermined steam temperature or any other factor affected by the flow of gases through the gas pass.

It is to be observed that the bell crank levers 37 and 39 are mounted in opposition so that their simultaneous actuation by the eccentric pulls on one of the links 36—38 and pushes on the other. Thus, the free ends of the tubes constituting the adjustable barrier are simultaneously flexed in opposite directions as indicated in Figure 1.

Where the tubes constituting the separate sections 14' and 14'' of the adjustable damper are divided into three groups as shown in Figure 6 the pairs of tubes constituting the *a* and *b* groups have pairs of stationary tubes 44 interposed therebetween. In other respects the situation is the same as that described.

The tubes of the *a* and *b* groups may be disposed alternately instead of in pairs as shown, but in any event, the tubes constituting the adjustable damper or shutter are always fixed at one end and free at the the other unless they constitute fixed tubes as in Figure 5, and to insure a substantially uniform distribution of gas flow through the entire area of the adjustable damper or shutter the flexure of the tubes of the two groups takes place simultaneously and in opposite directions.

The vertical displacement of the horizontal runs of the coils where they cross the outlet portion of the gas pass permits free passage of the gases.

From the foregoing description taken in connection with the accompanying drawings, it will be readily apparent to those skilled in this art that this invention provides an efficient and practical manner of controlling the flow of gases through a gas pass in a steam boiler or other similar heat exchange apparatus.

What I claim as my invention is:

1. In a fluid heat exchange apparatus: fixed walls defining a gas pass; a gaseous fluid heater positioned to be influenced by the flow of gases through said pass; a damper for controlling the flow of gases through said pass comprising a plurality of tubes arranged side by side to form a barrier of variable effectiveness depending upon the spacing of the tubes; means for circulating a cooling fluid through said tubes; certain of said tubes being laterally movable with respect to others while the apparatus is in service to change the spacing between tubes and thus vary the effectiveness of the barrier so that more or less gas flows through the gas pass to influence the gaseous fluid heater; and means for so moving said tubes from the exterior of the gas pass.

2. In a heat exchange apparatus: fixed walls defining a gas pass; a gaseous fluid heater positioned to be influenced by gases flowing through the pass; a bank of fluid cooled tubes connected to a source of cooling fluid and extending across said pass to form a barrier of variable effectiveness depending upon the spacing of said tubes; certain of the tubes having portions extending from the ends thereof along the adjacent wall of the pass to a point adjacent to another wall of the pass, said tubes being adapted to be flexed to shift their positions relative to the remaining tubes by an endwise force applied on their extended end portions; and means connected to said extended end portions and accessible on the exterior of said last named wall and through which endwise force may be applied to said extended end portions to flex said indicated tubes and vary the effectiveness of the barrier to thereby control the flow of gases through the pass and consequently regulate the extent to which the gases influence the gaseous fluid heater.

3. In a heat exchange apparatus: cooperating fixed walls defining a gas pass; a gaseous fluid heater positioned to be influenced by gases flowing through said pass; a bank of fluid cooled tubes connected to a source of cooling fluid and extending substantially entirely across the pass to form a barrier of an effectiveness depending upon the spacing of the tubes so that by regulating the spacing of the tubes the flow of gases through the gas pass and the influence thereof upon the gaseous fluid heater may be controlled; certain of said tubes having one end thereof fixed and the other end free to permit flexure of said tubes to change the spacing between them and adjacent tubes; fluid cooled motion transmitting means connected to the free ends of said tubes; and control means on the exterior of the gas pass and connected to said fluid cooled motion transmitting means at a point spaced from the direct influence of the gases flowing through said pass, for flexing said tubes to change their positions with relation to adjacent tubes and thereby vary the effectiveness of the barrier.

4. In a heat exchange apparatus: cooperating fixed walls defining a gas pass; a gaseous fluid heater positioned to be influenced by the flow of gases through said pass; an adjustable damper for said gas pass to regulate the effect of the gases flowing through the gas pass upon the gaseous fluid heater by controlling the flow of gases through the gas pass, said adjustable damper comprising a bank of fluid cooled tubes form-

ing a barrier across the pass of an effectiveness depending upon the spacing of the tubes, said tubes each having one end fixed and the other end free and being divided into at least two groups with the fixed ends of the tubes of one group adjacent to the free ends of the tubes of the other group so that simultaneous flexure of the free ends of all of said tubes in opposite directions effects substantially uniform variation in the spacing of the tubes for their entire lengths; and means connected to the free ends of the tubes for flexing the tubes.

5. In a heat exchange apparatus: cooperating walls defining a gas pass; a gaseous fluid heater positioned to be influenced by gases flowing through said pass; means forming an adjustable damper for said gas pass and comprising a bank of fluid cooled tubes connected with a source of cooling fluid and collectively constituting a barrier across the gas pass; certain of said tubes being free at one end so as to enable flexing of said tubes to alter the spacing between the tubes and effect adjustment of the damper; and means passing through a wall of the gas pass and connected to the free ends of the tubes for flexing said tubes.

6. In a heat exchange apparatus: cooperating walls defining a gas pass; a gaseous fluid heater positioned to be influenced by gases flowing through said gas pass; a bank of fluid cooled tubes connected to a source of cooling fluid and extending across the gas pass to form a barrier of an effectiveness depending upon the spacing of said tubes, adjustment of the spacing between said tubes regulating the flow of gases through the gas pass to thus control the extent to which the gaseous fluid heater is influenced by the gases; certain of the tubes having free ends to enable flexing of said tubes with relation to adjacent tubes to vary the spacing of the tubes; coil loops extending from and connected to the free ends of pairs of said tubes, said coil loops projecting into cavities in a wall of the gas pass to have their looped portions removed from the direct influence of the gases flowing through the pass; and means on the exterior of the gas pass and connected to the looped portions for moving said coil loops in and out to flex the tubes connected thereto.

7. In a heat exchange apparatus: cooperating walls defining a gas pass; a heat exchanger positioned to be influenced by the flow of gases through the gas pass; a bank of fluid cooled tubes collectively constituting a barrier across the gas pass of an effectiveness depending upon the spacing of the tubes; certain of said tubes having their ends at one side of the gas pass free and other tubes having their ends at the opposite side of the gas pass free so that an opposite flexing force applied on said free ends of the tubes results in varying the spacing between the tubes substantially uniformly for their entire length; looped coils connected to pairs of adjacent free ends of said tubes and extending substantially at right angles to said bank of tubes, the loops of said looped coils entering cavities in an adjacent wall

of the gas pass so as to be spaced from the direct influence of the gases flowing through the gas pass; and means on the exterior of said last named wall and connected to said loops for simultaneously applying opposite forces thereon to flex the tubes connected thereto in opposite directions.

8. In a heat exchange apparatus: cooperating walls defining a gas pass; a gaseous fluid heater positioned to be influenced by the flow of gases through the gas pass; a bank of fluid cooled tubes connected to a source of cooling fluid and collectively constituting a barrier across the gas pass of an effectiveness depending upon the spacing of the tubes, certain of said tubes having their ends at one side of the gas pass free and other tubes having their ends at the opposite side of the gas pass free so that opposite flexing forces applied on said free ends of the tubes results in varying the spacing between the tubes substantially uniformly for their entire length; looped coils connected to pairs of adjacent free ends of said tubes and extending substantially at right angles to said bank of tubes; and means connected to said looped coils for simultaneously applying opposite forces thereon to flex the tubes connected thereto in opposite directions.

9. In a heat exchange apparatus, fixed walls defining a plurality of passages connected in parallel between a source of heated gases and a receiving gas pass; a gaseous fluid heater in each of said passages to be influenced by the gases flowing therethrough to the receiving gas pass; an adjustable damper for each of said passages, said dampers comprising banks of fluid cooled tubes with each bank of tubes collectively forming a barrier across its respective passage; means for circulating cooling fluid through said tubes; and means for moving the tubes to vary the effectiveness of the barriers and thereby control the proportion of hot gases flowing through each of the passages to the receiving gas pass and likewise control the extent to which the gaseous fluid heaters are influenced by the hot gases.

10. In a heat exchange apparatus, fixed walls defining a plurality of passages connected in parallel between a source of heated gases and a receiving gas pass; a gaseous fluid heater in each of said passages to be influenced by the gases flowing therethrough to the receiving gas pass; an adjustable damper for each of said passages, said dampers comprising banks of fluid cooled tubes with each bank of tubes collectively forming a barrier across its respective passage; means for circulating cooling fluid through said tubes; certain of the tubes of each bank of tubes being free at one end so as to enable flexing of said tubes to alter the spacing between the tubes of each bank and effect adjustment of the dampers; and means connected to the free ends of the tubes for flexing the same to vary the effectiveness of the barriers and thereby control the proportion of gases flowing through each of the passages to the receiving gas pass and likewise control the extent to which the gaseous fluid heaters are influenced by the hot gases.

DAVID DALIN.