Nov. 15, 1955 I. KASE 2,723,696

RIGID FOUNDATION HANDBAGS WITH INTERCHANGEABLE OUTER COMPONENTS

Filed July 9, 1953 3 Sheets-Sheet 1

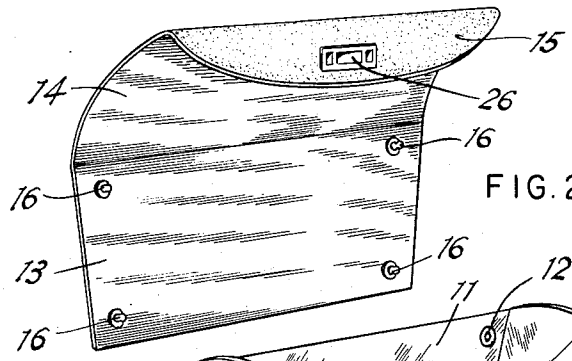

FIG. 2

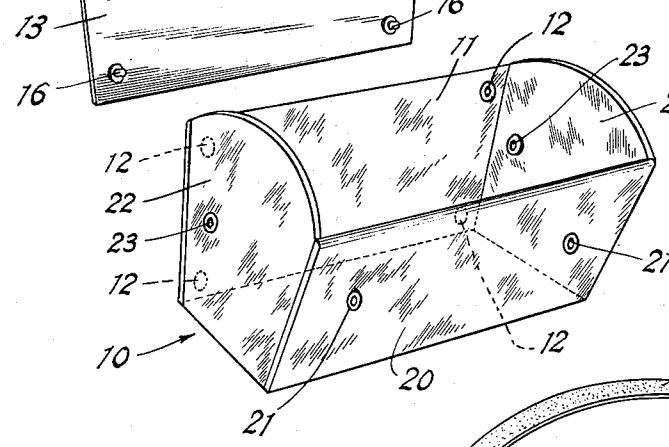

FIG. 1

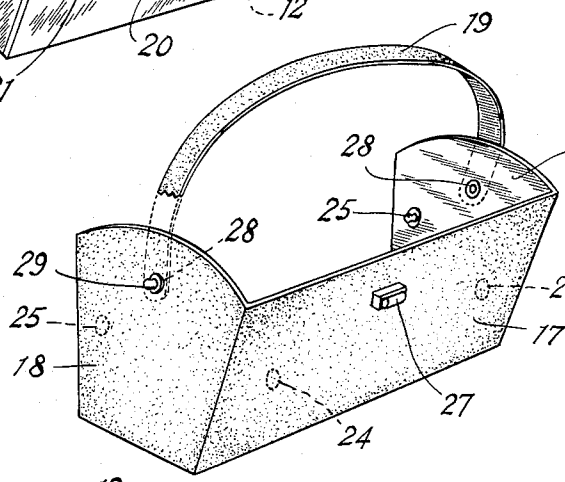

FIG. 3

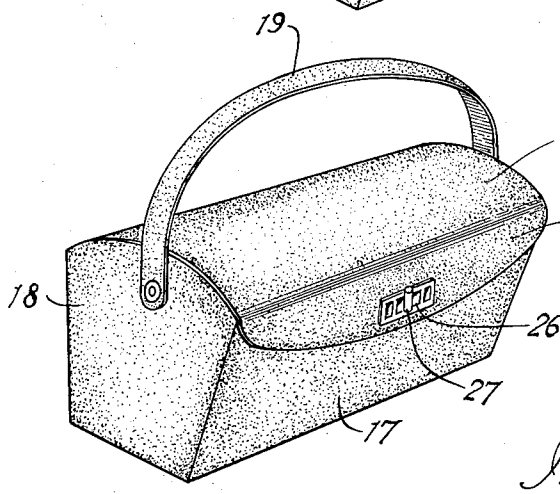

FIG. 4

INVENTOR
Irving Kase
BY
Irving Seidman
ATTORNEY

Nov. 15, 1955

I. KASE

RIGID FOUNDATION HANDBAGS WITH INTERCHANGEABLE OUTER COMPONENTS

2,723,696

Filed July 9, 1953

3 Sheets-Sheet 2

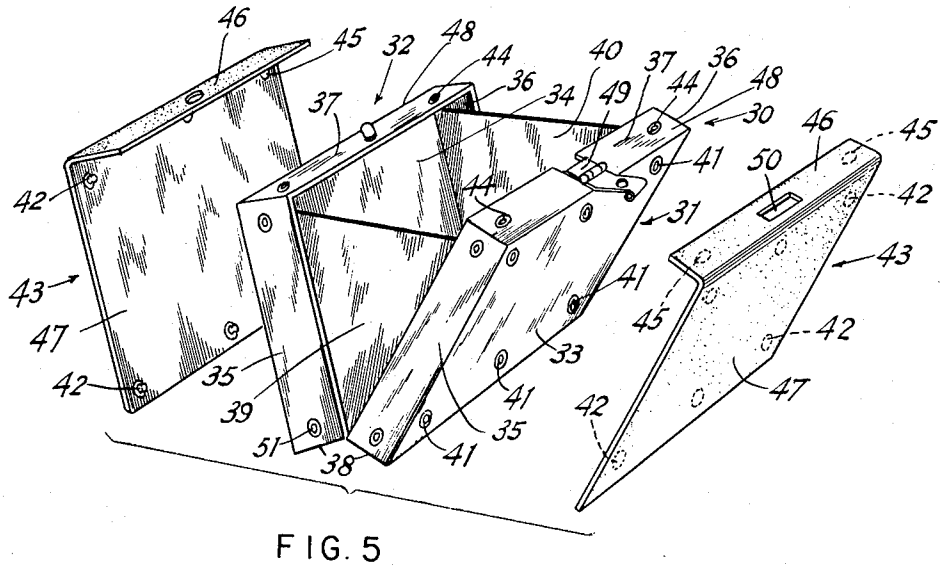

FIG. 5

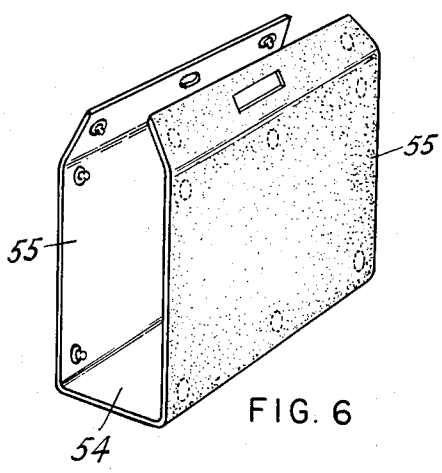

FIG. 6

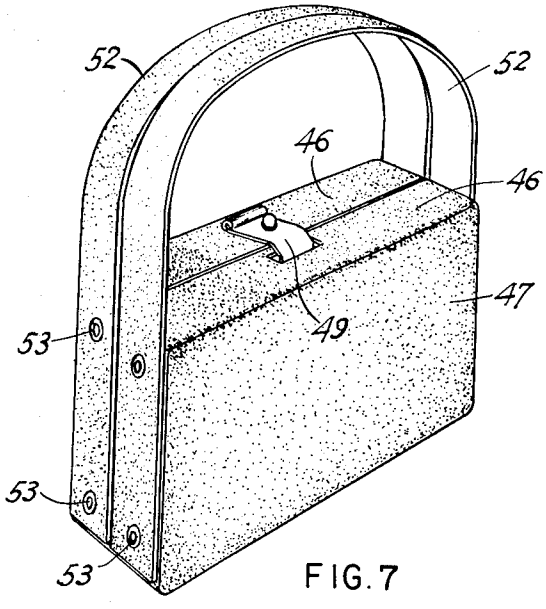

FIG. 7

INVENTOR
Irving Kase
BY
Irving Seidman
ATTORNEY

Nov. 15, 1955 I. KASE 2,723,696

RIGID FOUNDATION HANDBAGS WITH INTERCHANGEABLE OUTER COMPONENTS

Filed July 9, 1953 3 Sheets-Sheet 3

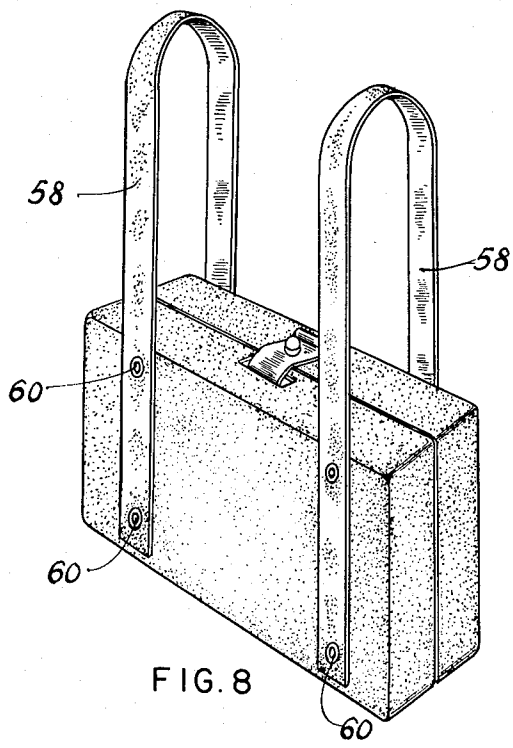

FIG. 8

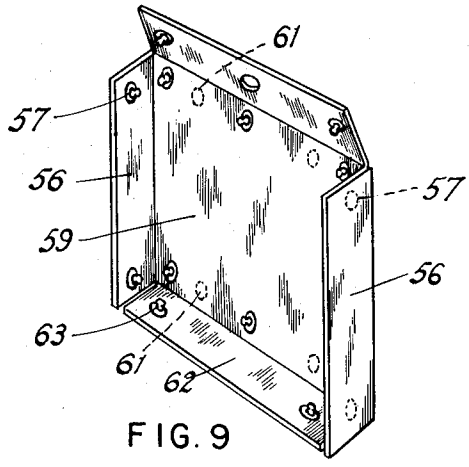

FIG. 9

INVENTOR
Irving Kase
BY
Irving Seidman
ATTORNEY

United States Patent Office 2,723,696
Patented Nov. 15, 1955

2,723,696

RIGID FOUNDATION HANDBAGS WITH INTERCHANGEABLE OUTER COMPONENTS

Irving Kase, Bronx, N. Y.

Application July 9, 1953, Serial No. 367,020

1 Claim. (Cl. 150—28)

This invention relates to ladies' handbags.

Broadly, it is an object of the invention to provide a rigid inner shell member with embedded female snap fasteners which can be rapidly covered with detachable and interchangeable coverings.

More particularly, it is an object of the invention to provide two types of rigid inner shell members having female snap fasteners embedded therein having removable and interchangeable coverings and removable and interchangeable handles.

A further object is to provide removable handles which act as both handles and partial covering members for the inner shell.

The modern woman likes to have her handbag match or harmonize with her dress and other accessories. Many women cannot afford a different handbag for each dress and in many instances there is not sufficient room in the average city apartment to store many handbags. It is therefore, desirable to provide a handbag of the types above described so that a woman can readily interchange the coverings upon the rigid inner shell to match the dress being worn. The use of the rigid inner shell with interchangeable coverings also avoids removal of the contents of the handbag thus saving time and annoyance when the handbag being used is changed.

For a fuller understanding of the nature and objects of the invention, reference is had to the following detailed description in connection with the accompanying drawings, in which:

Fig. 1 is a perspective view of the inner rigid shell or base member.

Fig. 2 is a perspective view of part of the one outer covering representing the combined back, top and closure flap.

Fig. 3 is a perspective view of the combined front and opposed sides, showing the detachable handle, partly broken away.

Fig. 4 is a perspective view of the handbag in completed form, that is with the detachable covering attached to the rigid inner shell member.

Fig. 5 is an exploded perspective view of a modified hingable type of handbag comprising two rigid members hinged along one edge and opposed interchangeable and removable outer coverings.

Fig. 6 is a perspective view of an outer covering which may be applied to the hingable rigid inner shell shown in Fig. 5.

Fig. 7 is a perspective view of a complete handbag around the inner hingable rigid unit shown in Fig. 5 with the outer covering shown in Fig. 5 and a two part handle.

Fig. 8 is a perspective view of another modified handbag.

Fig. 9 is a perspective view of one half of an outer covering.

Referring to the drawings, numeral **10** represents a unitary rigid inner shell preferably made of a clear plastic. Of course, the shell **10** may be made of rigid plastic members adhered together to form the unit as shown in Fig. 1. Other well known rigid materials such as wood and the like may also be used for the inner shell. I prefer, however, to form the inner shell **10** of plastic formed by injection molding so that the female snap fasteners shown in the drawing may be positioned automatically in their proper positions because of the structure of the dies.

The inner shell **10** may be covered by one or more sets of outer coverings or interchangeable parts, one set of which has been shown for the purpose of illustration.

The back **11** of inner shell **10** has four female snap fasteners **12** embedded therein. Fig. 2 shows a combined back **13**, top **14** and front flap **15**, the back **13** having four male snap fasteners **16** attached thereto and spaced to coincide with the spacing of the female snap fasteners **12** so that the back **13** may be attached to the back **11** of the inner shell **10**.

In Fig. 3 I have shown a combined unit comprising a front **17** and opposed sides **18**, to the sides of which a handle **19** may be attached. The front **20** of the inner shell **10** has a pair of female snap fasteners **21** embedded in the position shown in Fig. 1 and the sides **22** each have a single snap fastener **23** embedded therein. The unit shown in Fig. 3 may be readily attached to the front **20** and sides **22** of the inner shell **10** by snapping the male fasteners **24** of the front **17** into the female fasteners **21** of the front **20** and snapping the male fasteners **25** into the female fasteners **23** of sides **22**.

The front flap **15** has the female part **26** of a well known catch which may be readily attached to the male portion **27** of the catch attached to the front **17**. While I have shown a turnable catch well known in the art, any known catch commonly used on handbags may be used in place of the catch shown.

The sides **18** each also have a female snap fastener **28** to which may be attached the complementary male snap fastener **29** which are attached to the ends of the handle **19**. Fig. 4 shows the outer coverings and handle shown in Figs. 2 and 3 in position upon the shell shown in Fig. 1. The outer coverings shown in Figs. 2 and 3 may be of leather or different forms of plastic material or fabric of different types and may be lined or unlined depending upon the quality and price of the handbag. Of course, the lining may be of contrasting or harmonious colorings with the outer color or design of the outer face of the material used for the outer covering.

It is within the scope of the invention to provide many fabrics or sets of coverings of the form shown in Figs. 2 and 3 so that a woman may readily detach the outer coverings from the inner shell shown in Fig. 1 and attach another set of outer coverings in place thereof. Indeed, she may use the back top and flap portion shown in Fig. 2 of one set with the unit shown in Fig. 3 of another set and possibly a handle from a third set so that she can vary the color scheme and materials of the bag at will and to harmonize or contrast with the colors of the dress or accessories used. It is evident that it takes but a few moments to detach and attach the said outer coverings and handle since the cooperating fastening elements are predeterminably positioned.

By the use of the rigid inner shell shown in Fig. 1 a woman need not empty the contents within the shell and still rapidly change the color scheme of her handbag. Furthermore, should one portion of the outer covering wear more rapidly than another, such worn portion may be replaced for the cost of only that part and the entire handbag need not be discarded. It is also evident that the worn part may be entirely discarded and a similar portion used from a set of another color scheme or other materials.

It is also evident that by the use of a single inner shell such as is shown in Fig. 1 the equivalent of many bags

becomes available, saving not only the cost of several handbags but also space which is much needed in the average modern apartment.

Referring to Figs. 5, 6 and 7, the inner shell 30 shown in Fig. 5 comprises two rigid box-like members 31, 32 hinged together at the meeting edges of the base. Each member 31, 32 comprises a bottom 33, 34, opposed sides 35, 36 fronts 37 and backs 38. Members 31, 32 are held together by gussets 39, 40 which act as stops and sides when the inner members 31, 32 are in open position as shown in Fig. 5. Gussets 39, 40 may be of fabric or plastic material, such as vinyl and may be accordion pleated and may be attached to the inner portion of sides 35, 36 by any well known means such as welding by heat and pressure or permanently bonded, if plastic is used.

Bottoms 33, 34 have predeterminedly spaced female snap fasteners 41 embedded therein to coact with male snap fasteners 42 attached to outer covering 43. Likewise fronts 37 also have female snap fasteners 44 embedded therein to coact with male snap fasteners 45 attached to the fronts 46 of the outer covering. The outer covering 43 comprises bottoms 47 and fronts 46 formed of a unitary piece of material creased adjacent the upper edge so that it folds over edge 48. Fronts 37 have a catch 49 which may be of any well known type commonly used in handbags, the fronts 46 of the outer covering having suitable cutouts to accommodate any projections of the catch 49 appearing above the face of the fronts 37. It can be readily seen that the outer coverings 43 can be easily attached to the inner shell box-like members 31, 32 by the coacting snap fasteners 41, 42 and 44, 45. The opposed sides 35, 36 also have spaced apart female snap fasteners 51 embedded therein so that a pair of handles 52 may be attached to sides 35, 36 by male snap fasteners attached to the end portions of the handles 52 as shown in Fig. 7, such end portions of handles 52 act as side coverings for the sides 35 of the inner shell.

In place of outer coverings 43 shown in Figs. 5 and 7 a unitary member, as shown in Fig. 6 may be used which is in all respects the same as outer coverings 43 except that the lower edges merge into a back 54 which acts as an outer covering for the backs 38 of the inner shell.

The outer covering shown in Fig. 6 may be formed with split end wings 56 as shown in Figs. 8 and 9, such end wings may have male snaps 57 to coact with female snaps 51. When such an outer covering is used for the inner shell shown in Fig. 5, a pair of handles 58 may have the ends thereof attached by snap female fasteners 60 to the opposed bottoms 59 which have complementary male snap fasteners 61. The back 62 also has male snap fasteners 63 to coact with female snap fasteners (not shown) on the backs 38 of the shell 30.

It can be seen that this type of handbag has all the advantages of the handbag shown in Figs. 1 to 4, inclusive and the outer coverings may be disengaged from the inner shell shown in Fig. 5 and outer coverings of other materials and designs substituted. Handles of different types, materials, colors and designs may be used in connection with various kinds of outer coverings to vary the appearance and color scheme of the handbag.

It is obvious that the rigid inner shell in the two types shown, viz., the type shown in Figs. 1 to 4 and Figs. 5 to 7, may be varied in proportion and size without departing from the general spirit of the invention.

I claim:

A lady's handbag comprising a unitary inner open top plastic rigid shell, said shell comprising a bottom, opposed sides, a front and a back, female snap fasteners embedded in said sides, front and back of said shell, outer coverings for said inner shell, said coverings comprising a combined back, top and front flap, and a combined front and opposed sides, one portion of a catch on said front flap and a coacting catch portion on said front of said covering, male snap fasteners on said back, front and side coverings for attachment to said female snap fasteners on the respective parts of said inner shell, a handle having snap fasteners at the ends thereof for attachment to complementary snap fasteners on the opposed sides of said covering.

References Cited in the file of this patent

UNITED STATES PATENTS

1,526,839	Dempsey	Feb. 17, 1925
1,990,360	Anish	Feb. 5, 1935
2,093,097	Potash	Sept. 14, 1937
2,116,902	Lehrfeld	May 10, 1938
2,131,382	Lobel	Sept. 27, 1938

FOREIGN PATENTS

548,626	France	Oct. 28, 1922