May 4, 1965 L. R. PHILLIPS 3,181,795

ENCLOSURE STRUCTURE

Filed Oct. 17, 1961 3 Sheets-Sheet 1

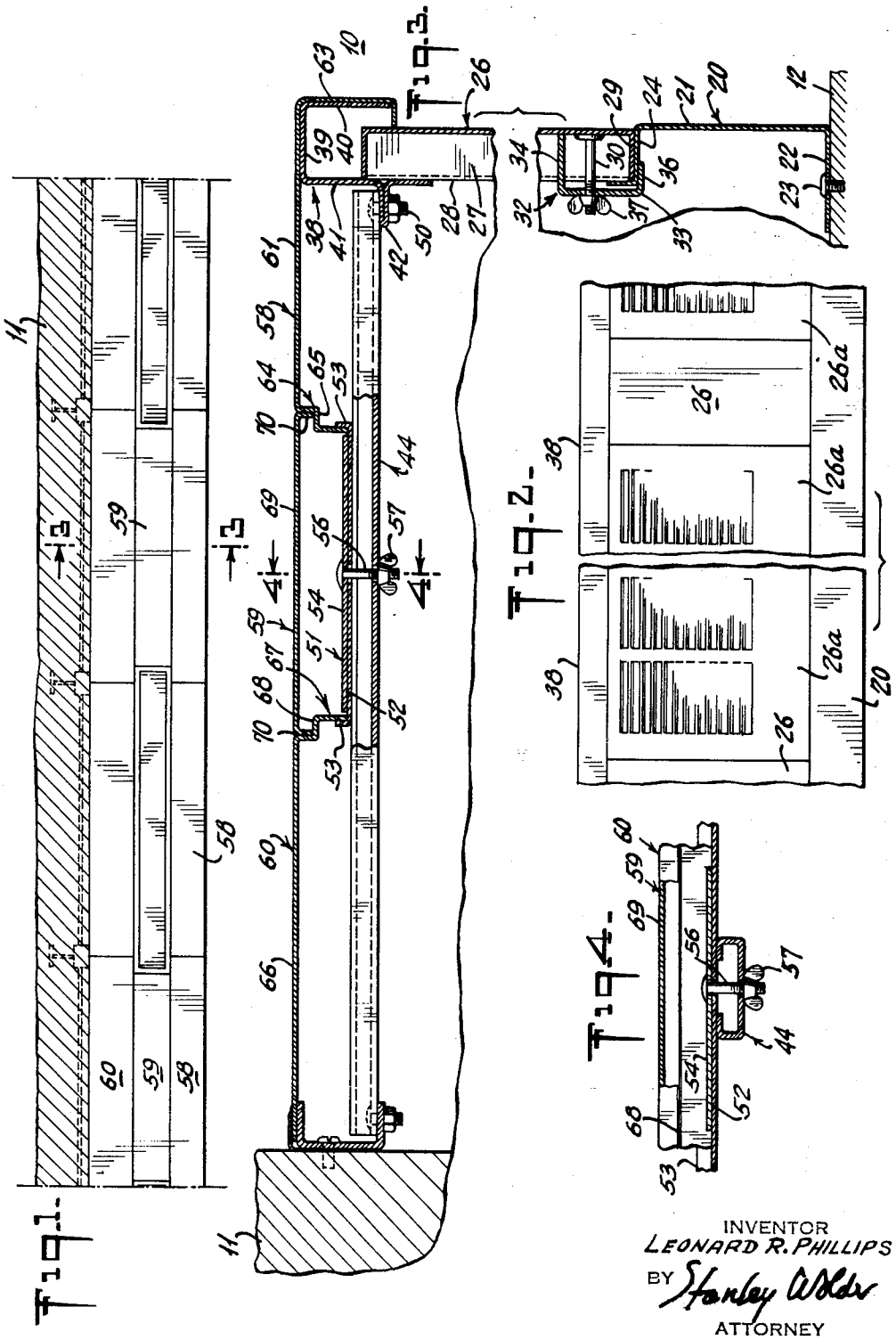

INVENTOR
LEONARD R. PHILLIPS
BY Stanley Wilder
ATTORNEY

May 4, 1965 L. R. PHILLIPS 3,181,795

ENCLOSURE STRUCTURE

Filed Oct. 17, 1961 3 Sheets-Sheet 2

Fig. 5.

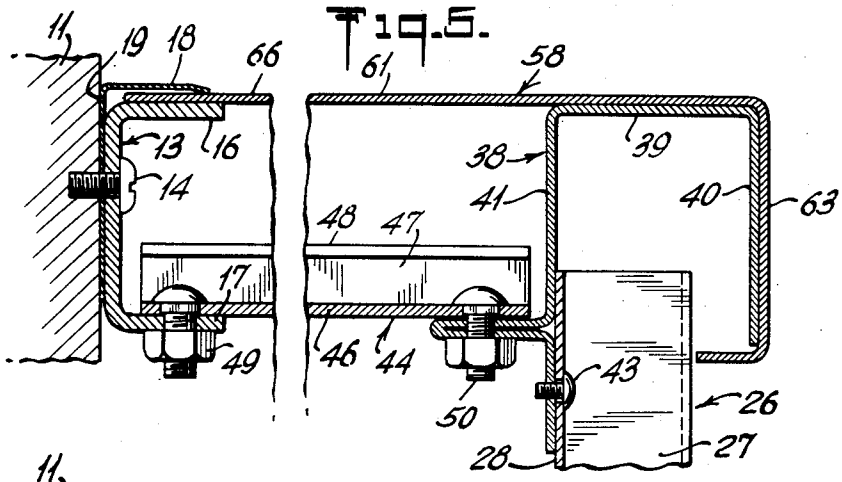

Fig. 6.

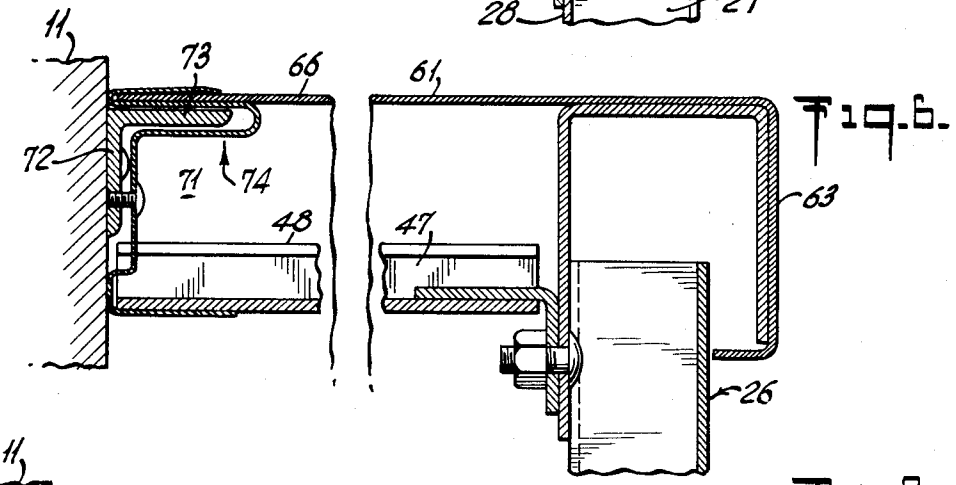

Fig. 7.

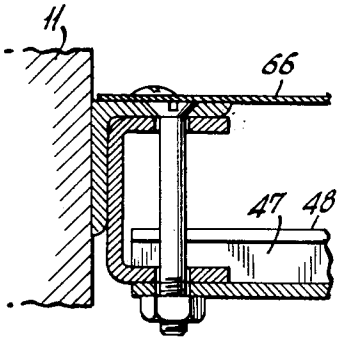

Fig. 8.

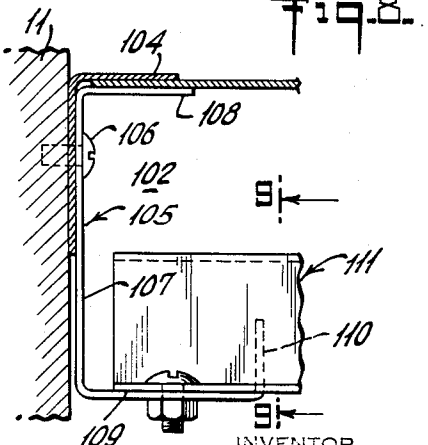

Fig. 9.

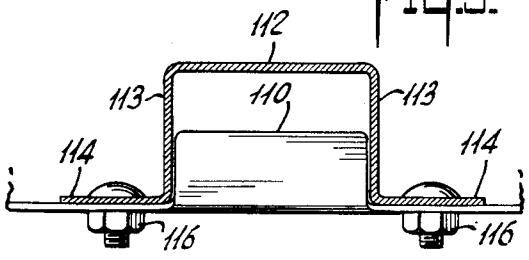

INVENTOR
LEONARD R. PHILLIPS
BY Stanley Welder
ATTORNEY

May 4, 1965 L. R. PHILLIPS 3,181,795

ENCLOSURE STRUCTURE

Filed Oct. 17, 1961 3 Sheets-Sheet 3

Fig. 11.

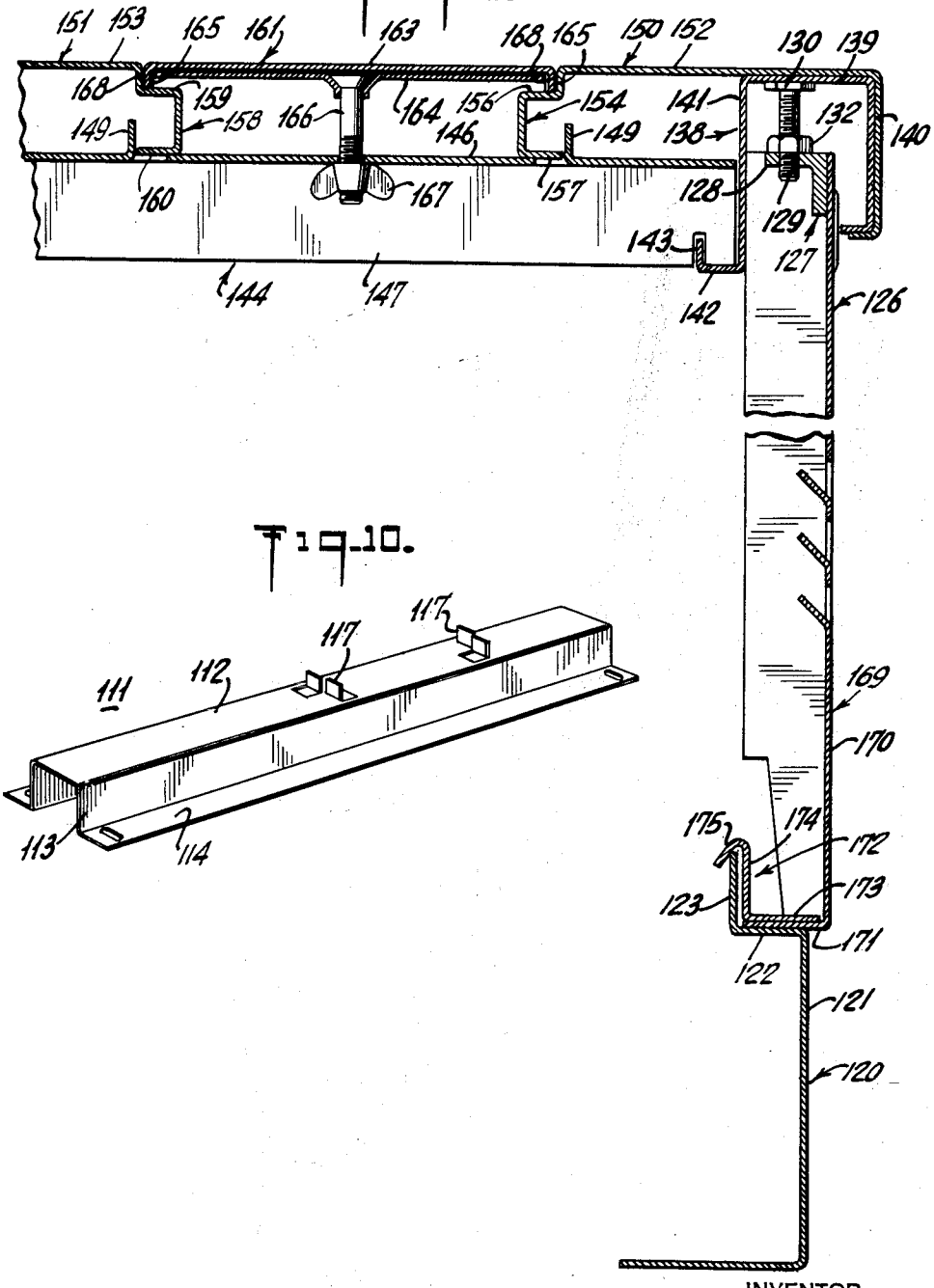

Fig. 10.

INVENTOR
LEONARD R. PHILLIPS
BY Stanley Wolder
ATTORNEY

United States Patent Office 3,181,795 Patented May 4, 1965

3,181,795

ENCLOSURE STRUCTURE

Leonard R. Phillips, Whitestone, New York, N.Y., assignor to Triangle Sheet Metal Works, Inc., New Hyde Park, N.Y., a corporation of New York

Filed Oct. 17, 1961, Ser. No. 145,650
21 Claims. (Cl. 237—79)

The present invention relates generally to improvements in air conditioning unit enclosure structures and relates more particularly to a prefabricated enclosure structure which may be readily assembled to the corner of a room delineated by the floor and a wall thereof for housing air conditioning heat exchange units and the like.

It is a conventional practice in the heating and cooling of buildings to provide heat exchange units, usually connected by pipes, along the exposed wall of the room to be air conditioned, and to circulate a heat exchange medium through the units at the temperature required to heat or cool the conditioned space. The heat exchange units are generally housed in enclosures having openings formed in the walls thereof to permit the circulation of air therethrough. The enclosures heretofore employed for housing these heat exchange units possess numerous drawbacks and disadvantages. They are expensive devices which are difficult to ship and assemble, and are usually custom fabricated for each particular job. Their erection is highly time consuming and requires skilled labor. In addition, the resulting enclosure is usually structurally weak and unattractive in appearance and otherwise leaves much to be desired.

It is therefore a principal object of the present invention to provide an improved enclosure structure.

Another object of the present invention is to provide an improved prefabricated enclosure structure for housing air cooling and heating units extending along a wall of a room.

Still another object of the present invention is to provide an improved prefabricated enclosure structure which is easily and rapidly assembled and erected along a wall of a room with a minimum employment of skilled labor.

A further object of the present invention is to provide a corner enclosure for room heating and cooling systems which is highly adaptable and versatile and permits ready access to the interior thereof.

Still a further object of the present invention is to provide an improved enclosure structure of the above nature characterized by its simplicity, ruggedness, attractive appearance and low cost.

The above and other objects of the present invention will become apparent from a reading of the following description taken in conjunction with the accompanying drawings wherein:

FIGURE 1 is a top plan view of an enclosure structure embodying the present invention illustrated in fully erected position;

FIGURE 2 is a fragmentary front elevational view thereof;

FIGURE 3 is a cross sectional view taken along line 3—3 in FIGURE 1;

FIGURE 4 is a cross sectional view taken along line 4—4 in FIGURE 3;

FIGURE 5 is an enlarged detailed sectional view, partially broken away, of the upper section of the improved enclosure;

FIGURE 6 is a view similar to FIGURE 5 of another embodiment of the present invention;

FIGURE 7 is a vertical sectional view of the rear upper section of another embodiment of the present invention;

FIGURE 8 is a view similar to FIGURE 7 of a further embodiment of the present invention;

FIGURE 9 is a sectional view taken along line 9—9 in FIGURE 8;

FIGURE 10 is a perspective view of the reinforcing rib employed in the structure illustrated in FIGURES 8 and 9; and

FIGURE 11 is a fragmentary transverse vertical sectional view of another preferred embodiment of the present invention, the lower section being laterally offset relative to the upper section.

In a sense, the present invention contemplates the provision of an enclosure structure for use along a corner delineated by a floor and a vertical wall comprising a first bracket fastened to said wall above said floor, a second bracket fastened to said floor forward of said wall, a vertical front panel mounted on said second bracket, a third bracket mounted atop said front panel, and disposed at approximately the level of said first bracket, a transversely extending elongated reinforced rib extending between and fastened to said first and third brackets, a first horizontal top panel mounted above said rib and extending from said first bracket to a point rearward of said third bracket, a second horizontal top panel mounted above said rib and extending rearwardly from said third bracket to a point forward of said first top panel, and a separable horizontal lid defining third top panel extending between the confronting edges of said first and second top panels.

According to a preferred form of the present invention, the first bracket is defined by one or more channel members extending longitudinally along the wall, the upper and lower legs thereof being forwardly directed, the lower leg supporting the rear ends of a plurality of longitudinally spaced rib members and the upper leg being provided with an overlying longitudinally extending forwardly directed resilient flange which engages the rear border of the first top panel. The second bracket includes a longitudinally extending vertical web terminating at its top in a rearwardly directed platform upon which rests and is detachably fastened the front panel. The third bracket extends longitudinally continuously or intermittently along the upper edge of the front panel and is of inverted U-shaped cross section and includes a rearwardly directed shelf upon which rests and are separably fastened the front ends of the ribs. The second top panel has a forward hook shaped border embracing the third brackets. The confronting edges of the first and second top panels are provided with depending stepped flanges which engaging locking grooves formed in plates mounted on the ribs and the third panel includes depending lips which rest on the flange steps. In accordance with other embodiments of the present invention there are provided modified forms of the first and third brackets, the reinforcing ribs and the top panel locking arrangement.

Referring now to the drawings, and particularly to FIGURES 1 to 5 thereof which illustrate a preferred embodiment of the present invention, the reference numeral **10** generally designates the novel enclosure structure which is mounted to and cooperates with a corner defined by a vertical wall **11** and a floor **12** to house a room heat exchange unit, an air conditioning system, or the like. The enclosure **10** is prefabricated and is assembled and erected in place and may be of any desirable length by the use of repeating contiguous end to end component units. The enclosure includes a first bracket **13** defined by a continuous or a plurality of longitudinally spaced channel members having a vertical web confronting the wall **11** and fastened thereto by screws **14**, and upper and lower forwardly directed longitudinally extending legs **16** and **17** respectively. A forwardly directed resilient web or flange **18** is located directly above the bracket leg **16** and terminates at its

rear edge in a dependent skirt 19 which is sandwiched between the vertical web of the bracket 13 and the wall 11 and is secured by the screws 14.

A second longitudinally extending bracket 20 is mounted on the floor 12 forward of the wall 11 and includes a vertical web 21 provided at its lower edge with a rearwardly directed flange 22 resting on the floor 12 and secured thereto by screws 23 and at its upper edge with a rearwardly directed platform defining flange 24 terminating along its rear edge in an upwardly directed lip 25. Mounted on the platform 24 are a plurality of laterally spaced mullions or narrow front panels 26 of rectangular configuration provided along its peripheral edge with rearwardly directed side walls 27 terminating in laterally projecting flanges 28 and a bottom wall 29 resting on the platform 24. A stud 30 is welded to and projects rearwardly from each of the mullions 26. Coupling members 32 are provided to secure the mullions 26 to the bracket 20 and each includes a vertical web 33 having an opening formed therein registering with the corresponding stud 30. Directed forwardly from the web 33 are upper and lower flanges 34 and 36 respectively, the upper flange 34 projecting substantially to the mullion 26 and the lower flange 36 abutting the underface of the platform 24. A wing nut 37 engages the stud 30 and is tightened to effect the locking of the assembly of the bracket 20 and the mullion 26. A plurality of louvered or perforated front panels 26*a* are provided which rest upon the bracket platform and extend between successive mullions 26 and supported as will be set forth.

A longitudinally extending third bracket 38 is mounted along the tops of the mullions 26 and includes an upper horizontal cross web 39, a skirt 40 depending from the forward edge of the cross web 39 and located forward of the mullion 26, and a skirt 41 depending from the rear edge of the cross web 39 and abutting the flanges 28. The rear skirt 41 is crimped to form a rearwardly directed platform 42 which is at the level of the bracket leg 17, the lower border of the skirt 41 being fastened to the panel flanges 28 by suitable screws 43.

A plurality of longitudinally spaced transverse parallel ribs 44 extend between the bracket 13 and 38. The ribs 44 are of channel shaped configuration including bottom webs 46 and upright legs 47 terminating in inwardly directed lip 48. The rear ends of the ribs 44 rest on the bracket leg 17 and are secured thereto by nut carrying bolts 49 which register with aligned slots formed in the rib 46 and in the bracket leg 17. Similarly, the front ends of the ribs 44 rest on the platform 42 and are secured thereto by nut carrying bolts 50 registering with aligned slots formed in the platform 42 and rib bottom web 46.

Mounted on each of the ribs 44 between the ends thereof is a locking assembly 51 including a rectangular base plate 52 resting on the rib flanges 48 and provided along its forward and rear edges with longitudinally extending parallel upwardly projecting flanges 53. Superimposed upon the base plate 52 is an upper rectangular plate 54 having longitudinal edges spaced from and parallel to flanges 53 to delineate therewith longitudinally extending locking grooves. The locking assembly 51 is secured to the rib 44 by a bolt 56 registering with aligned openings formed in the plates 51 and 54 and in the rib bottom web 46 and engaged by a wing nut 57.

The top surface of the enclosure 10 is defined by front, intermediate and rear top panels 58, 59 and 60 respectively. The front top panel 58 includes a longitudinally extending rectangular web 61 the forward border of which rests on the bracket upper web 39 and terminates in a depending skirt 63 provided with a rearwardly directed bottom lip which embraces the skirt 40. Depending from the rear edge of the web 61 is a rearwardly stepped flange 64 provided with a horizontal shoulder 65, the lower border of the flange 64 registering with the locking groove defined by the front edge of the plate 54 and the upwardly projecting flange 53. The rear top panel 60 includes a

horizontal rectangular top web 66 the rear border of which is sandwiched between the confronting faces of the bracket leg 16 and the elongated flange 18. A forwardly stepped flange 67 depends from the front edge of the web 66 and is provided with a shoulder 68 colevel with the shoulder 65. The bottom border of the flange 67 is engaged by the locking groove delineated by the rear edge of the plate 54 and the upwardly projecting flange 53 of the base plate 52. The intermediate top panel 59 includes a rectangular web 69 coplanar with the panel webs 61 and 66 and registering with the space delineated by the confronting edges of the web 61 and 66. Longitudinally extending flanges 70 depend from the front and rear edges of the panel web 69 and rests on the shoulders 65 and 68 and substantially abut the confronting upper borders of the flanges 64 and 67. One or more of the top panels 58, 59, and 60 may be louvered or otherwise perforated to permit the circulation of air through the enclosure 10.

The erection and assembly of the enclosure 10 on site is rapid and simple. The bracket or brackets 13 are secured to the wall 11 at the proper level by the screws 14 and the bracket or brackets 20 and secured to the floor 12 at the proper distance from the wall 11 by the screws 23. Thereafter the front mullions 26 to which the bracket or brackets 38 are secured are mounted in properly spaced arrangement atop the bracket 20 and locked thereto by means of the stud 30 wing nuts 37 and coupling members 32. The ribs 44 are then assembled and fastened to the bracket leg 17 and platform 42 by the nuts and bolts 49 and 50 and the locking assemblies 51 secured to the ribs 44 by the nuts and bolts 57 and 56. The rear border of the panel web 66 is inserted between the bracket leg 16 and flange 18 and the lower border of the flange 67 is inserted in the rear locking groove of the locking assembly 51. The front hook shaped section of the front top panel is placed into embracing engagement with the corresponding upper section of the bracket 38 and the lower border of the flange 64 inserted into the locking assembly front locking groove. The intermediate top panel is then placed into position to complete the assembly and erection of the enclosure 10. The front panels 26*a* are then mounted by inserting their upper borders into the bracket 38 and resting their lower borders on the platform 24.

The enclosure 10 is a strong and rigid structure which is easily and rapidly erected and assembled. Access to the enclosed area is readily available merely by lifting the intermediate panel 59 and, if desired, then detaching the panels 58 and 60 and also by removing the front panels 26*a*. Full disassembly of the enclosure 10 is likewise simply effected. The number and lengths of the various components may be as desired and depend on the overall length of the finished enclosure. The shipping and storing of the members forming the enclosure is greatly facilitated by reason of their substantially flat configurations.

The embodiment of the present invention, illustrated in FIGURE 6 of the drawing, differs from that previously described principally in the construction of the wall bracket and the reinforcing rib coupling arrangement. Specifically, the wall bracket, designated by the reference numeral 71, includes an elongated horizontal angle member or a plurality of longitudinally spaced angle members each provided with a vertical leg 72 abutting and fastened to the wall 11 and an upper forwardly projecting leg 73. Mounted on the wall bracket is a coupling member 74 formed of sheet metal and including a vertical web 76 secured to the bracket leg 72 by screws or other suitable fasteners and having formed at its bottom a rearwardly directed arm terminating in a depending leg 77 abutting the wall 11 and carrying a forwardly projecting shelf 78. A loop section 79 extends forwardly from the upper edge of the web 76 and embraces the angle member leg 73 and has integrally formed along the rear edge thereof a forwardly directed flange 80*a* which over-

lies the loop section **79**. Mounted on the top of the mullion **26** is a bracket **80**, which, like the bracket **38**, includes an upper web **81** provided along its front edge with a depending leg **82**, and along its rear edge with a depending leg **83** which is suitably fastened to the mullion **26**. The reinforcing ribs **84** differ from the ribs **44** in that an angle member is disposed at the front end of the rib **84** and includes a horizontal leg **86** welded to the horizontal web of the rib **84** and a depending vertical leg **87**.

The erection and assembly of the enclosure last described differs from that first described only in that the rear ends of the ribs **84** are brought to rest on the shelves **78** and the front ends are fastened to the brackets **80** by nuts **88** and bolts **88***a* registering with aligned openings in the leg **87** and bracket leg **83**.

Another form of wall bracket for use in the present enclosure structure is illustrated in FIGURE 7 of the drawing and includes an angle member having a vertical leg **90** suitably secured to the wall **11** and an upper forwardly directed leg **91**. The reinforcing cross rib **92** is similar in configuration to the previously described cross rib **44**. A U-shaped spacer member **94** includes a vertical arm **96** abutting the bracket leg **90** an upper forwardly directed leg **97** underlying the bracket leg **91** and a lower forwardly directed leg **98**. The spacer member leg **98** rests upon the rear end of the horizontal web of the rib **92**. The bracket **90**, spacer member **94** and rib **92** may be releasably locked in assembled condition by a bolt **99** having a countersunk head nesting in a corresponding aperture in the bracket leg **91** and a shank registering with aligned openings in the spacer member legs **97** and **98** and the web of the rib **92**, and having a threaded end engaged by a nut **100**. The rear border of the panel web **66** is fastened to the bracket leg **91** by suitable screws **101**. In all other respects, the construction and assembly of the last enclosure are similar to those previously described.

Referring now to FIGURES 8 to 10, of the drawing, which illustrate another form of enclosure structure according to the present invention which differs from those earlier described in the construction of the wall bracket assembly and of the reinforcing rib and panel locking assembly, the reference numeral **102** designates the wall bracket which includes an angle member having a vertical leg **103** abutting the wall **11** and an upper forwardly projecting leg **104**. A support member **105** of substantially U-shaped configuration is fastened to the wall **11** by screws **106** passing through the vertical arm **107** of the support member **105** and the underlying vertical bracket leg **103**. Horizontal legs **108** and **109** project forwardly from the upper and lower edges respectively of the arm **107**, the upper leg **108** being parallel to and spaced slightly below the angle member leg **104** and the lower leg **109** being provided with an upwardly directed tongue **110**.

The reinforcing cross ribs **111** are channel shaped and each includes an upper horizontal web **112** provided with depending side legs **113** which terminate in outwardly directed horizontal flanges **114**. The rear end of the rib **111** rests on the support leg **109** and is secured thereto by nuts **116** and bolts **116***a* registering with aligned openings in the flanges **114** and leg **109** and the forward end of the rib **111** is similarly coupled to the corresponding bracket **38** as earlier described. Formed in the rib upper horizontal web **112** between the ends thereof are longitudinally spaced pairs of longitudinally and laterally spaced upwardly directed lugs **117** which delineate a pair of longitudinally spaced locking grooves releasably engaging the lower borders of the panel flanges **64** and **67** and supplanting the locking assembly **51**. The erection and operation of the structure last described are similar to those earlier described and are obvious from the above description.

Referring now to FIGURE 11 of the drawings which

illustrates another form of the present invention, the reference numeral **120** designates a longitudinally extending floor mounted bracket corresponding to the bracket **20** and including a vertical web **121**, and a rearwardly directed upper platform **122** terminating in an upwardly directed lip **123**. The mullions **126** are mounted atop the bracket **120** in the manner earlier described and each has an angle member **127** affixed to its upper border and provided with a rearwardly directed horizontal leg **128**. A leveling bolt **129** engages a tapped bore formed in the angle member leg **128** and is provided with a flat head **130** and is engaged by a lock nut **132** abutting the top face of the angle member leg **128**.

A longitudinally extending bracket **138** is mounted atop the mullions **126** and includes a horizontal top web **139** resting on the bolt heads **130** which have been previously adjusted and locked at their proper level. Depending from the front edge of the web **139** is a front skirt **140** terminating in a rearwardly directed lip engaging a pad located on the mullion **126**. A rear skirt **141** depends from the rear edge of web **139** and has formed along its lower edge a rearwardly projecting platform **142** terminating in an upwardly directed lip **143**.

The cross ribs **144** are channel shaped, each including a horizontal top web **146** and depending side legs **147**. Formed adjacent to the leading edges of the side legs **147** are vertical slots **148** which releasably engage the lips **143**, the front ends of the rib legs **147** resting on the platform **142**. The rear ends of the ribs **144** may be secured to the wall bracket in the manners earlier described. A pair of longitudinally spaced upwardly directed front and rear lips **149** are formed in the rib top web **146** intermediate the ends thereof.

The front and rear top panels **150** and **151** are somewhat similar in construction to those earlier described, being provided with rectangular top webs **152** and **153** respectively. Depending from the rear edge of the web **152** is a rearwardly stepped flange **154** provided with a horizontal platform **156** and terminating in a frontwardly directed leg **157** engaging a corresponding lip **149**. Depending from the front edge of the web **153** is a frontwardly stepped flange **158** provided with a horizontal platform **159** and terminating in a rearwardly directed leg **160** engaging a corresponding lip **149**. In other respects the panels **150** and **151** are like those earlier described.

A support plate or strip **164** is located between the panels **150** and **151** and is provided with front and rear depending flanges **165** which rest on the platforms **156** and **159** and are spaced from the confronting faces of the flanges **154** and **158**. Suitably secured to and depending from the plate **164** is a bolt **166** which registers with an aligned opening in the rib web **146** and is locked in position by a wing nut **167**. The intermediate top panel **161** includes a horizontal rectangular web **163** resting on the plate **164** and provided with front and rear depending flanges **168**. The flanges **168** register with the grooves delineated by the confronting faces of the flanges **165** and **154** and **158** and rest on the platforms **156** and **159**, the web **163** being coplanar with the webs **152** and **153**. The front panels **169**, like the panels **26***a*, extend between the mullions **126**. The panels **169** each include a louvered front vertical wall **170** provided along its lower edge with a rearwardly directed flange **171** resting on the rearwardly directed bracket platform **122**. A latch member **172** includes a horizontal leg **173** overlying and secured to the flange **171** and provided along its rear edge with a vertical leg **174** terminating in a rearwardly projecting downwardly facing hook section **175** which engages the upper border of the bracket upwardly directed lip **123**. The upper border of the panel **169** projects into the bracket **138**. In applying the panel **169** to the assembly the upper border thereof is inserted into the bracket **138** and it is then brought to a substantially vertical position and dropped to the locked posi-

tion illustrated in the drawing. Otherwise, the assembly and employment of the enclosure last described is similar to those earlier described.

While there have been illustrated and described preferred embodiments of the present invention, it is apparent that numerous alterations, omissions and additions may be made without departing from the spirit thereof.

What is claimed is:

1. An enclosure structure field assembled from a plurality of separate units for use along a corner delineated by a floor and a vertical wall comprising a first bracket unit fastened to said wall above said floor, a second bracket unit fastened to said floor forward of said wall, a plurality of laterally spaced mullions mounted on said second bracket, vertical front panels located between successive of said mullions and releasably supported on said second bracket, a third bracket mounted at substantially the tops of said front panels and said mullions, and disposed at approximately the level of said first bracket, transversely extending elongated reinforcing ribs extending between and connected to said first and third brackets, a first horizontal top panel unit mounted above said ribs and extending from said first bracket to a point rearward of said third bracket, a second horizontal top panel unit mounted above said ribs and extending rearwardly from said third bracket to a point forward of said first top panel, and a separable horizontal lid defining a third top panel between said first and second top panels.

2. An enclosure structure according to claim 1 including a locking plate mounted on said ribs between the ends thereof and having transversely spaced upwardly directed grooves formed in the upper face thereof and flanges depending from the confronting edges of said first and second top panels and having lower borders registering with said grooves, said flanges being inwardly stepped to define a pair of coplanar shoulders, said third top panel resting on said shoulders.

3. An enclosure structure according to claim 2 wherein said third top panel has depending flanges along its front and rear edges which rest upon said shoulders.

4. An enclosure structure according to claim 1 wherein at least one of said top panels is perforate.

5. An enclosure structure according to claim 1 wherein said first bracket is defined by a longitudinally extending channel having a vertical web abutting and secured to said vertical wall and forwardly directed upper and lower legs, the rear ends of said ribs resting on said channel lower leg and the rear border of said first top panel resting on said channel upper leg.

6. An enclosure structure according to claim 5 including a horizontal forwardly directed resilient flange secured at its rear end to said first bracket and bearing upon the upper face of the rear border of said first top panel.

7. An enclosure structure according to claim 1 wherein said first bracket member is defined by an angle member including a vertical leg abutting said vertical wall and an upper forwardly directed leg, and a coupling member including a vertical leg secured to said angle member vertical leg and provided at its top with a coupling section of S-shaped configuration engaging respectively said angle member upper leg and the rear border of said first top panel and terminating at its bottom in a forwardly directed platform upon which the rear ends of said ribs rest.

8. An enclosure structure according to claim 1 wherein said first bracket is defined by an angle member including a vertical leg abutting said vertical wall and an upper forwardly directed leg, a channel member including a rear web abutting said angle member vertical leg and an upper forwardly directed leg underlying said angle member upper leg and a bottom forwardly directed leg, and a fastening bolt having a shank engaging said legs of said channel member, said upper leg of said angle member and a corresponding one of said ribs.

9. An enclosure structure according to claim 1 wherein said third bracket includes a horizontal top wall having a depending rear leg disposed rearwardly of and fastened to the upper section of said front panel and a depending front leg disposed forwardly of said panel and a platform directed rearwardly of said rear leg, the front ends of said ribs resting on and being fastened to said platform.

10. An enclosure structure according to claim 9 including a depending front skirt on said third bracket and a flange depending from the front edge of said second top panel and extending along said depending front skirt and terminating in a rearwardly directed lip underlying the bottom edge of said depending front skirt, the front top border of said second panel resting on said bracket top wall.

11. An enlcosure structure according to claim 1 wherein said second bracket member is defined by a vertical plate terminating at its lower end in a rearwardly directed leg resting on and fastened to the floor and terminating at its upper end in a rearwardly directed platform, said mullions resting on said platform, and means separably fastening said front panel to said platform.

12. An enclosure structure according to claim 11 wherein said front panel terminates along its lower edge in a rearwardly directed flange resting on said second bracket rearwardly directed platform.

13. An enclosure structure according to claim 1 wherein each of said ribs includes an upper web having transversely spaced pairs of transversely spaced longitudinally extending upwardly directed locking tabs formed therein, the confronting edges of said first and second top panels having flanges depending from their confronting edges and engaging said pairs of locking tabs.

14. An enclosure structure field assembled from a plurality of separate units for use along a corner delineated by a floor and a vertical wall comprising a first bracket unit connected to said wall above said floor, a plurality of laterally spaced vertical mullions, means connecting said vertical mullions to said floor forwardly of said wall, a vertical front panel mounted in registry with the spaces between successive of said mullions forward of said wall, a third bracket mounted substantially at the top of said mullions and disposed at approximately the level of said first bracket, transversely extending elongated reinforcing rib units extending between and mounted on said first and third brackets, a first horizontal top panel mounted above said rib units and extending from said first bracket to a point rearward of said third bracket, a second horizontal top panel mounted above said rib units and extending rearwardly from said third bracket to a point forward of said first top panel, and a separable horizontal lid defining third top panel between said first and second top panels.

15. An enclosure structure field assembled from a plurality of separate units for use along a corner delineated by a floor and a vertical wall comprising a first bracket unit connected to said wall above said floor, a second bracket unit connected to said floor forward of said wall, a plurality of laterally spaced mullions mounted on said second bracket, a third bracket extending longitudinally at substantially the tops of said mullions, a plurality of laterally spaced transverse reinforcing ribs extending between said first and third brackets, a laterally extending horizontal top panel separably mounted on said ribs, and front panels located between successive of said mullions and releasably supported between said second and third brackets.

16. An enclosure structure field assembled from a plurality of separate units for use along a corner delineated by a floor and a vertical wall comprising a first bracket unit connected to said wall above said floor, a second bracket unit fastened to said floor forward of said wall, a plurality of laterally spaced mullions mounted on said second bracket, a third bracket extending longitudinally at substantially the tops of said mullions, a plurality of laterally spaced transverse reinforcing ribs extending between said first and third brackets, a laterally extending

horizontal top panel separably mounted on said ribs, and front panels located and releasably supported between successive of said mullions.

17. An enclosure structure field assembled from a plurality of separate units for use along a corner delineated by a floor and a vertical wall comprising a first bracket unit connected to said wall above said floor, a second bracket unit fastened to said floor forward of said wall, a plurality of laterally spaced front mullions mounted on said second bracket, a vertical separable front panel extending between successive of said mullions and projecting above said second bracket, a first horizontal top panel extending rearwardly of said front panel, a plurality of transversely extending reinforcing ribs extending forwardly of said first bracket unit and at substantially the level thereof to substantially said front panel, a second horizontal top panel separate from said first panel and mounted to said ribs and extending forwardly from the said first bracket to a point rearwardly of said first top panel, and a separable horizontal lid defining a third top panel between said first and second top panels.

18. An enclosure structure according to claim 16 wherein said third bracket has a downwardly directed longitudinally extending opening formed therein and the upper borders of said front panels releasably register with said opening and the bottoms of said first panels rest on said second bracket.

19. An enclosure structure according to claim 18 including an upwardly directed lip located on said second bracket and a hook member secured to the lower part of said front panels and releasably engaging said lips.

20. An enclosure structure according to claim 16 wherein said third bracket has a downwardly directed longitudinally extending opening formed therein and the upper borders of said mullions register with said opening.

21. An enclosure structure according to claim 16 including means for adjusting the level of said third bracket relative to said mullions.

References Cited by the Examiner

UNITED STATES PATENTS

896,420	8/08	Stoker et al.	237—79
1,855,565	4/32	Bennett	237—79 X
1,871,225	8/32	Shurtleff	165—54
1,880,281	10/32	Reynolds	237—79
1,962,225	6/34	Woodman et al.	237—79
2,074,622	3/37	Sargent et al.	165—54 X
2,436,288	2/48	Capra	237—79
2,500,037	3/50	Katz	237—79
2,670,935	3/54	Arnold	165—55
2,768,804	10/56	Keller	165—55 X
2,866,676	12/58	Goebel	312—253
3,052,508	9/62	Fink	312—351 X
3,056,639	10/62	Caminker et al.	237—79

FOREIGN PATENTS

503,532	6/54	Canada.
12,205	6/09	Denmark.

EDWARD J. MICHAEL, *Primary Examiner.*

PERCY L. PATRICK, *Examiner.*