Sept. 9, 1941. O. J. GARTNER 2,255,660

MATERIAL PROJECTOR

Filed Aug. 26, 1939

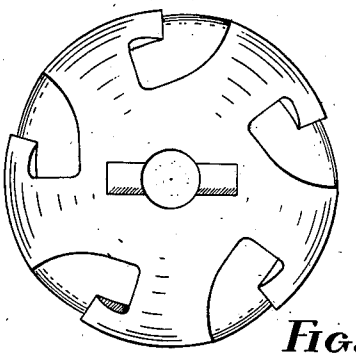

FIG. 2

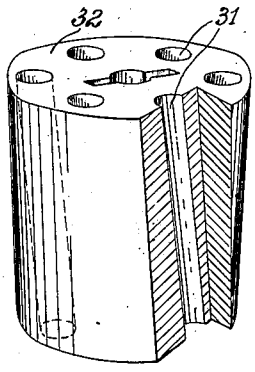

FIG. 4

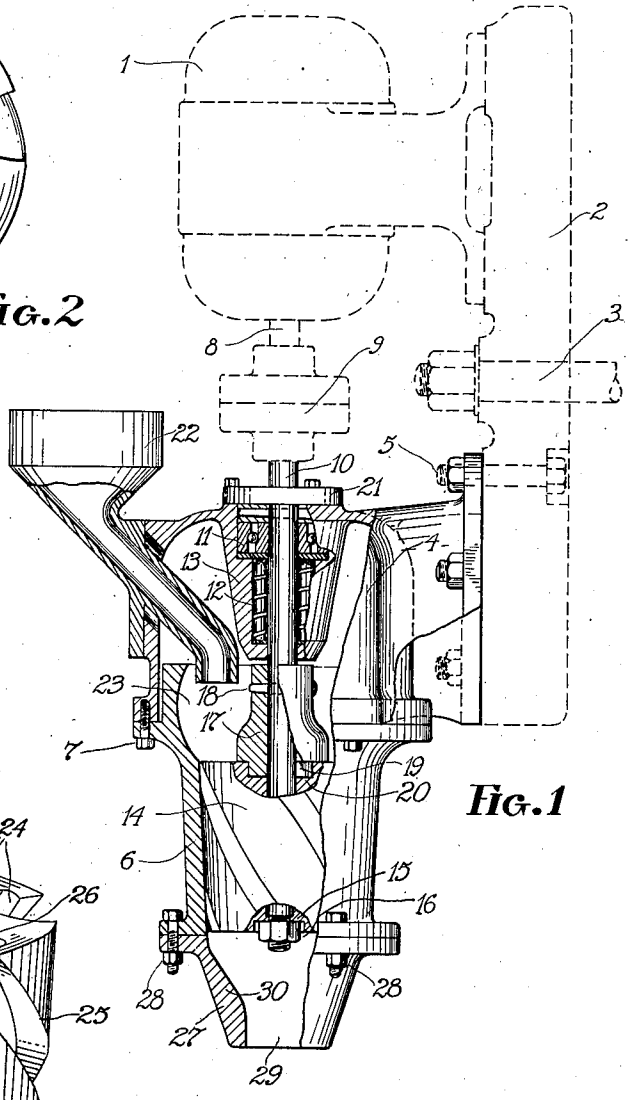

FIG. 1

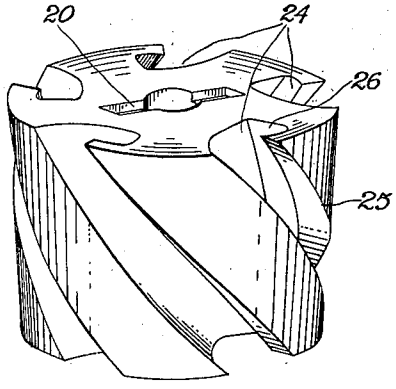

FIG. 3

INVENTOR.
OWEN J. GARTNER
BY Hauxhurst & Van Horn
his ATTORNEYS

Patented Sept. 9, 1941 2,255,660

UNITED STATES PATENT OFFICE

2,255,660

MATERIAL PROJECTOR

Owen J. Gartner, Cleveland, Ohio

Application August 26, 1939, Serial No. 292,117

3 Claims. (Cl. 51—9)

My invention relates to material projectors and more particularly to a rotary means for projecting abrasive materials.

It is one of the objects of my invention to reduce the initial and maintenance costs of abrasive projecting machines by constructing a machine of this type, in which the destructive action of the abrasive material to the parts of the machine is reduced to a minimum.

Another object of the invention is to construct a machine of the above named character in which the abrasive material is fed to a rotor near its outer circumference and then delivered from the rotor at a point near its hub or axis.

A further object is to provide a rotor having the general form of a truncated cone and having a plurality of guide channels for feeding the abrasive material from a point near its larger diameter to a point near its smaller diameter.

Another object is to provide a rotary projector for materials such as abrasives, which is simple in construction, inexpensive to manufacture and maintain, and easy to operate.

A still further object resides in the novel mounting or support for the rotor whereby a stream of abrasive may be easily directed in any desirable direction.

Other objects and advantages of my invention will become more apparent as the following description of one embodiment thereof progresses, reference being made to the accompanying drawing, in which like reference characters are employed to designate like parts throughout the same.

In the drawing—

Figure 1 is a side elevation of a machine embodying my invention, some of the parts being shown in section;

Figure 2 is a top view, slightly enlarged, of the rotor element illustrated in Figure 1;

Figure 3 is a perspective view of the rotor element illustrated in Figures 1 and 2; and

Figure 4 is a perspective view of a modified form of rotor.

In sand or abrasive throwing machines, it has been the custom to feed the abrasive material to or through the hub of a wheel rotating at high speed, and to utilize the action of centrifugal force to project the material from the wheel at its outer periphery against an object to be treated.

Among the chief objections to this type of projector is the fact that the abrasive particles cause extremely high wear, and destroy the blades of the wheel in a few hours' time, necessitating stopping the machine for repair and replacement of blades, thus resulting in loss of considerable time and high operating expense. Increased internal resistance generated in this type of machine obviously requires greater horsepower to overcome such resistance. Furthermore, with this type of machine, it is extremely difficult, if not impossible, to properly concentrate and control the stream of abrasive material to the desired areas.

By my invention, I have overcome these difficulties and have provided a machine for projecting all classes of fluids in such a manner that excessive wear in the machine is eliminated.

While I have illustrated in the drawing a form of my invention which is particularly adapted for use in projecting abrasive material such as metal abrasives or sand, it is to be understood that I do not intend to be limited to this application of the invention, since it is equally well adapted to projecting other materials in the fluid or semi-fluid state.

An electric motor or other power plant 1 is mounted upon a plate 2. The plate 2 is swiveled for swinging movement upon a shaft 3 carried by suitable support (not shown). The upper casing member 4 is removably mounted on the plate 2 below the shaft 3 by means of the bolts 5. A lower casing member 6 is removably attached to the casing 4 by a series of bolts 7.

From the drawing, it will be seen that the motor shaft 8 is in axial alignment with the axis of the assembled casing members 4 and 6. The drive shaft 8 is connected through a suitable coupling member 9 with a driven shaft 10 extending into the casings 4 and 6, there being provided with a thrust bearing 11 and a roller bearing 12 in the bearing support 13.

The shaft 10 extends axially downwardly from the bearings 11 and 12 and through a rotor 14. The rotor or impeller 14 is locked to the shaft 10 at 15 by means of a lock nut 16 threaded on the lower end of the shaft 10.

A driving connection between the shaft 10 and the rotor 14 is provided at 17. The member 17 is keyed to the shaft at 18 and is provided with a lower transverse rib 19 which is adapted to seat in the slot 20 of the rotor 14 when the parts are assembled as shown.

From the above, it will be clear that the bearings 11 and 12 are readily accessible from the upper casing 4 by removing the cap 21, and that the rotor 14 is readily reached by removing the nuts 16 and 7 to release the lower casing 6 and the rotor 14. It is important that these parts be easily accessible for replacement, although by

my invention replacement will be much less frequent than with the bladed wheel type of machine.

A feeding hopper 22 of convenient size may be carried by the upper casing member 4 to deliver the material to be projected to the compartment 23 within the lower casing 6. The hopper 22 is provided with a delivery spout of suitable diameter which is inclined downwardly and inwardly of the upper casing 4 and terminating at a point within the chamber 23 about the outer periphery of the rotor 14.

Referring now more particularly to Figures 2 and 3 of the accompanying drawing, I will describe the construction of the rotor 14 more in detail.

This element 14 of the machine is of truncated cone form and is designed to impart a velocity to the material by high speed rotation of the rotor 14 and at the same time to guide the material from the point where it is received into the rotor 14, that is near its largest diameter to the delivery end of the rotor which is at its smallest diameter.

The rotor 14 is preferably formed by casting and in the form illustrated in Figures 2 and 3 is provided with a plurality of helical guides 24 substantially L-shaped in cross-section, each opening outwardly throughout its length at 25, and each having a portion recessed at 26 into the body of the rotor 14. The rotor 14 is provided with an axial bore to receive the shaft 10 and with a slot in its upper portion to receive the key of the locking member 17.

It is to be noted that by my invention the material to be projected is first introduced into the guides 24 of the rotor 14 at the upper end at a point near the greatest diameter of the rotor 14 and that the material travels along the helical guides 24 and recesses 26 as the rotor 14 is revolved at high speed to be delivered from the rotor 14 at a point near the smallest diameter of the rotor 14. In effect, the material is caused to travel toward the axis of the rotor 14 from a point near its periphery.

By this design, I have found that excessive wear caused by the abrasion of particles traveling at high speed is greatly reduced, since the manner of conveying the material through the rotor as contemplated by my invention reduces to a great extent internal abrasive wear in the machine, and at the same time tends to build up a strong projecting pressure upon the material.

In the machines of the prior art of which I am aware the material is fed into or near the hub of a high speed wheel and is allowed to impinge upon blades substantially radially disposed within the wheel, and thence travel outwardly along the blades to be delivered from some point on the periphery of the wheel.

It is clear that in these machines of the prior art, the parts and more particularly the blades have a useful life of only a few hours at best.

But, as has been described above, my invention has eliminated this excessive wear. I provide a removable and interchangeable nozzle 27 which may be attached to the lower casing 6 by means of bolts 28. This nozzle is provided with an outlet 29 through which a swirling jet of the material is delivered. The inner wall of the nozzle 27 is built up annularly at 30 to resist wear, since there is considerable abrasive action of the material with the inner wall of the nozzle 27 as the former passes therethrough.

In Figure 4 I have illustrated a modification of the means for guiding the material through the rotor. In this form the rotor 32 is formed with a plurality of openings 31 passing from a point near the largest diameter of the rotor to a point near its smallest diameter and axially of the rotor. It is to be noted that in this form of the rotor the openings or ducts 31 are entirely enclosed within the rotor, thus confining contact of the material as it passes through the rotor to the walls of the openings. It is to be further observed that the ducts 31 are substantially straight as distinguished from the channels shown in Figures 1 to 3, and that their axes are disposed at an angle of about thirty degrees to the axis of the rotor.

It is to be understood that while I have shown in Figures 1 to 3 and Figure 4 certain forms of channels or guides through the rotor, I do not wish to be limited to the specific cross-sectional shapes of these channels, since I may equally well employ channels having modified cross-sections, without impairing the efficiency of the machine.

Various changes in the details of construction and arrangement of parts may be made without departing from the spirit of the invention.

I claim:

1. In a material projector, a cylindrical casing, a pivoted support for the casing, said casing being movable about a horizontal axis and having a material charging inlet at one end, a discharge nozzle at the other end of the casing, said nozzle having a restricted discharge opening co-axial with a rotor, a rotor in the casing, means for rotating said rotor in the casing at high velocities, said rotor having a plurality of helical passages communicating with the casing inlet and with the nozzle, whereby material entering the inlet will be discharged in the form of a concentrated stream through the nozzle at high velocity.

2. In a material projector, a cylindrical casing, a pivoted support for the casing, said casing being movable about a horizontal axis and having a material charging inlet at one end, a discharge nozzle at the other end of the casing, said nozzle having a restricted discharge opening co-axial with a rotor, a rotor in the casing, means for rotating said rotor in the casing at high velocities, said rotor having a plurality of passages arranged helically of the rotor and communicating with the casing inlet and with the nozzle, whereby material entering the inlet will be discharged in the form of a concentrated stream through the nozzle at high velocity, said passages being substantially L-shaped in cross section.

3. In a material projector, a cylindrical casing, a pivoted support for the casing, said casing being movable about a horizontal axis and having a material charging inlet at one end, a discharge nozzle at the other end of the casing, said nozzle having a restricted discharge opening co-axial with a rotor, a rotor in the casing, means for rotating said rotor in the casing at high velocities, said rotor having a plurality of helically arranged passages communicating with the casing inlet and with the nozzle, whereby material entering the inlet will be caused to travel in a direction toward the rotor axis as it approaches the discharge end of the casing.

OWEN J. GARTNER.