Nov. 5, 1940. I. G. MOE 2,220,725

X-RAY APPARATUS

Filed Aug. 15, 1939 2 Sheets-Sheet 1

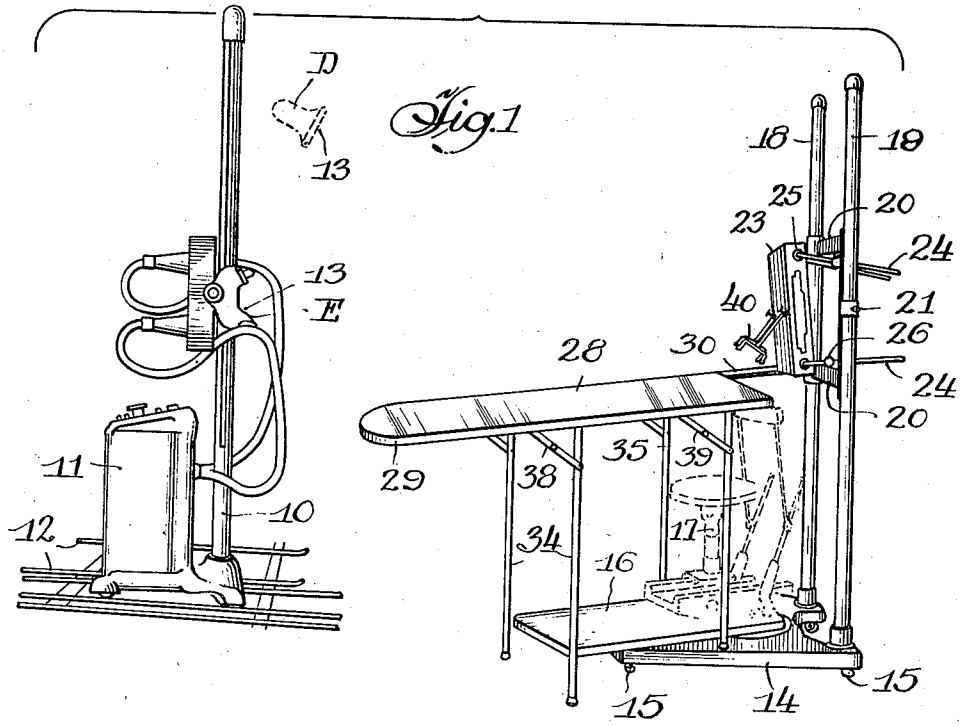

Fig. 1

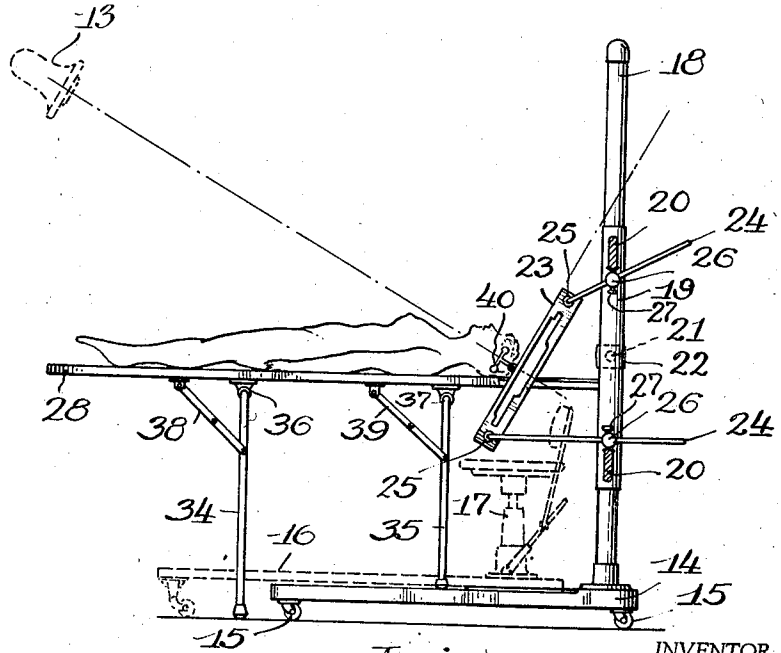

Fig. 2

INVENTOR.
Irving George Moe,
BY Nils T. Eichelman
ATTORNEY.

Nov. 5, 1940. I. G. MOE 2,220,725

X-RAY APPARATUS

Filed Aug. 15, 1939 2 Sheets-Sheet 2

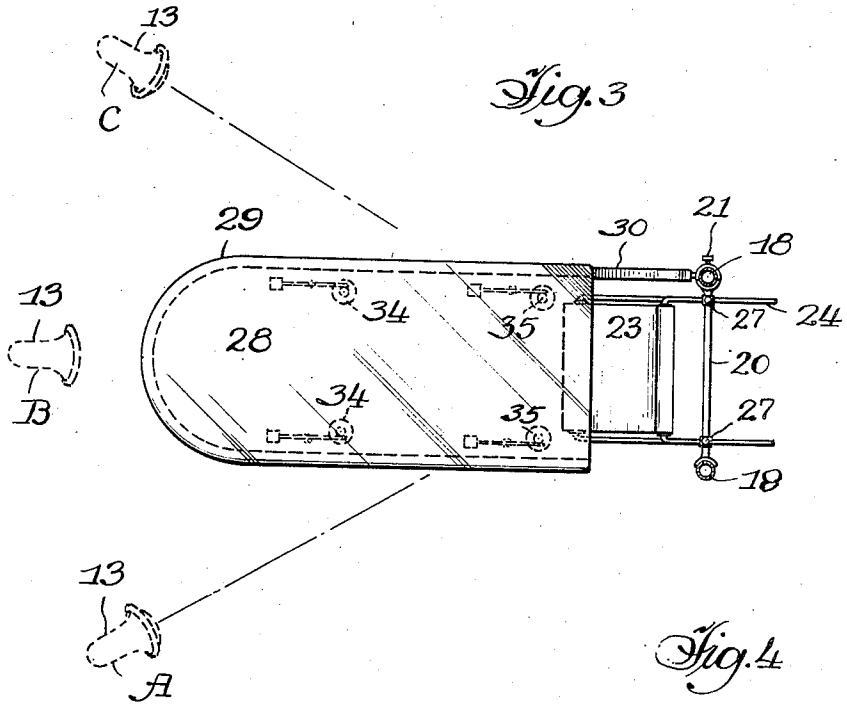

Fig. 3

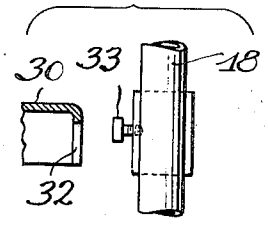

Fig. 4

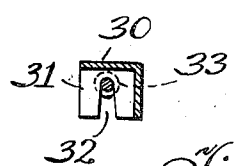

Fig. 5

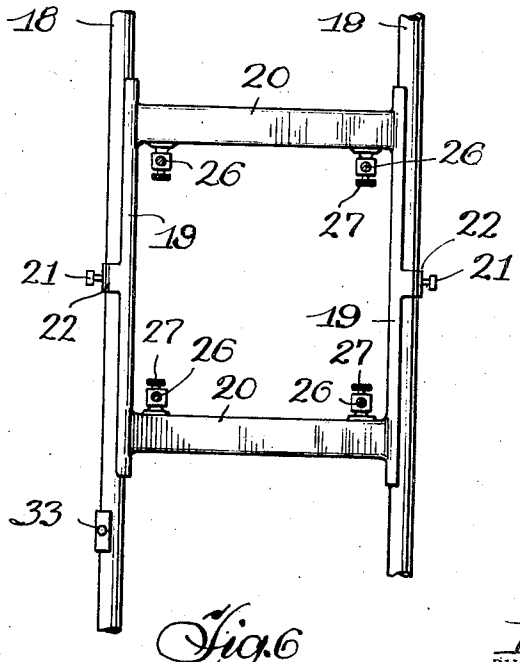

Fig. 6

INVENTOR.
Irving George Moe,
BY Amy G. Eichelman
ATTORNEY.

Patented Nov. 5, 1940

2,220,725

UNITED STATES PATENT OFFICE

2,220,725

X-RAY APPARATUS

Irving George Moe, Kenosha, Wis.

Application August 15, 1939, Serial No. 290,268

8 Claims. (Cl. 250—58)

My present invention relates to photography and particularly to X-ray or radiograph apparatus and specifically to the support for the subject, and the mechanical improvements incident thereto to facilitate the making of a shadowgraph or radiograph particularly showing the visual outline of the atlas and axis vertebrae to determine the relative rotation of the atlas in conjunction with the occipital bone.

The primary object of my invention is to provide equipment which will permit the patient to be fixedly positioned in the making of stereoscopic shadowgraphs of the atlas and axis vertebrae without subjecting the patient to inconvenience, pain and the suffering heretofore occasioned in this particular operation, as in order to employ the present known form of equipment, the patient has heretofore been caused to kneel before the plate holder or what is commonly known as the "bucky."

Further objects of my invention are to provide a specific form of removable table which may be rigidly affixed to the present X-ray equipment for the objects outlined without dismantling the equipment, but which may be readily removed and the equipment restored to its original state so as to perform its regular line of work; and

To provide improved means to support the patient whereby the operator may uninterruptedly and successively expose a plurality of negatives for the producing of stereoscopic effects without moving the position of the patient, and

To provide a support for the patient permitting the shifting and adjusting of the bucky or plate holder into a plane normal to the Roentgen rays without changing the position of the patient; and

To provide for adjusting the X-ray generating member or tube during intervals between photographic exposures without setting up a movement between the patient and the plate holder which would effect the registering of the negatives in stereoscopic work of this nature.

My invention has these and other objects, all of which are explained in detail and may be more readily understood when read in conjunction with the accompanying drawings (two sheets), which illustrate the preferred embodiment of my invention, it being manifest that changes and modifications may be resorted to without departure from the spirit of the claims forming a part hereof. And while I describe my invention in its preferred embodiment, it is to be further understood that the words I use are words of description and not of limitation.

In the drawings:

Fig. 1 is a perspective view of the X-ray generator and its support shown in its relative position to the plate holder or bucky, the Bucky carriage and its support are shown with the table assembled in operative position, and

Fig. 2 is an elevation of the Bucky carriage and supporting frame with table assembled and bucky in operative position; the near side of the Bucky carriage has been removed for purpose of illustration; and

Fig. 3 is a plan view of the table and assembled bucky, the X-ray generating tube being shown in various positions by dotted lines; and

Fig. 4 is an enlarged fragmental detail in elevation of the self locking device which secures the table to the main supporting frame; and

Fig. 5 is an elevational view of the elements in Fig. 4 shown assembled; and

Fig. 6 is an enlarged elevational view of the Bucky carriage shown assembled to the vertical supporting columns.

Similar reference characters refer to similar parts throughout the several views.

The structure illustrated embodies my invention when applied to an X-ray generator carriage 10 and transformer 11 adjustably mounted upon tracks 12 and pivotally supporting an adjustable X-ray generator or tube 13 which is the source of the radiant energy or Roentgen rays. Considerable latitude of adjustment is provided so that the tube 13 may take any one of many positions such as illustrated at points A, B and C in Fig. 3 of the drawings with varying elevations such as shown at D and E in Fig. 1.

Operatively associated with the X-ray generator, and positioned substantially adjacent thereto (see Fig. 1) is a bucky or plate holder with its carriage and support. The support consists of a platform 14 mounted upon casters 15 with a secondary platform 16 pivotally secured thereto and upon which platform sets a chair or stool 17 (shown in dotted lines only). At the rear of the platform 14 rise two parallely disposed vertical columns 18 which are rigidly secured to the platform 14 in spaced relation as shown, forming a main supporting frame for the bucky or plate holder.

Slidably adjustable upon the columns is a plate holder carriage which has side mounts 19 having bearing upon the columns 18 with transverse and integral cross bars 20 completing the frame. Carried by the mounts 19 are set screws 21 in sleeves 22 forming an integral part of the side mounts as shown which serve as locks for securing the

frame in any desired position when adjusted vertically upon the columns.

A bucky or plate holder 23, substantially rectangular and of dimensions which will allow it to freely pass between the columns, is rotatably mounted to the plate holder carriage by means of four rods 24 which are pivotally connected to the plate holder at points 25 and journalled in universal joints 26 carried by the cross bars 20 of the plate holder carriage. Set screws 27 lock the rods in any desired position whereby by adjustment of the rods, the plate holder may be positioned in any desired horizontal plane. Fig. 1 shows the plate holder in one position whereas Fig. 2 shows it in an entirely different position to illustrate this point.

The structure above described is employed in the making of shadowgraphs where the patient can stand before the columns 18 and 18, the plate holder is adjusted to cover the area to be X-rayed, the X-ray generator is then next adjusted and the negative exposed. Where the patient must be X-rayed in a sitting position the stool 17 is employed as shown in dotted lines Figs. 1 and 2 and the turntable 16 facilitates adjustment. But the occasion often presents itself when the doctor requires a shadowgraph showing the visual outline of the axis and atlas vertebrae to determine the relative rotation of the atlas in conjunction with the occipital bone. Heretofore the only known method by which this could be done subjected the patient to a kneeling position before the plate holder. This method not only is impractical, as it is almost impossible to hold the patient from moving during the exposure, but such a procedure caused needless pain and suffering to the patient. Such a procedure also made it impossible to make stereoscopic negatives for proper diagnosis, as in the making of such it is imperative that the subject be held in a fixed position and without movement for the period of time required to make a series of successive shadowgraph negatives.

I now adapt the radiographic apparatus just previously described to the making of shadowgraphs of the atlas and axis vertebrae for the purposes outlined by providing a table comprising a table top 28 having a length substantially greater than its width, and reinforced around its edge or periphery preferably with a metal channel member 29 one end of which extends beyond the head of the table as at 30 where it is formed downwardly at 31 (see Figs. 4 and 5) and slotted at 32 to receive a beaded key 33 which is rigidly affixed, but adjustable upon the column 18 forming part of the Bucky support as described. This arrangement not only secures the table in a fixed position relative to the Bucky carriage and supporting frame, but provides a self locking device whereby the table may be assembled or disassembled at will without material labor and adjustment. As the means of securement just described are not ample support, I further provide two pairs of legs 34 and 35 which are foldably attached to the under side of the table at 36 and 37 with suitable knee braces 38 and 39 as shown. This arrangement of parts supports the table in the position shown whereby the head of the table is spaced from the Bucky columns providing an opening between the head of the table and the columns through which opening the plate holder 23 is adapted to pass and take the position shown in Fig. 2 wherein only a portion of said plate holder will underlie the head of the table as shown. And as there is but a single bracket 30 attaching the table in this position, the opposite (near side on drawings) side is open and free of obstruction thus facilitating uninterrupted access to the plate holder for the insertion or removal of negatives during operation.

In operation, the patient is placed upon the table in a prone position as indicated on the drawings Fig. 2, with the head slightly tilted with chin raised; the bucky is lowered and adjusted about the horizontal axis of the Bucky carriage to a position approximating 30° from the vertical and in a position substantially below the table top as shown. The patient's head may then be held by suitable clamps 40 carried on the frame of the bucky. The source of X-ray or tube 13 is next adjusted to a position whereby the rays will travel in a plane substantially normal to the plane of the negative as carried by the bucky and travel on a line drawn below the chin and under the ear as indicated. As the head of the table is positioned away from the Bucky columns ample space is provided for the movement and adjustment of the bucky, and as the opening is left at the head of the table, the operator is facilitated in the successive exposure of a plurality of negatives without disturbing the patient as there is no interference in the operation of inserting or removing the negative from the bucky when in its operative position.

In stereoscopic work, where it is the object to produce pictures in pairs like those used in the stereoscope to give an appearance of solidity and to thereby better the visual interpretation of an image in the art of recognizing the presence of disease from its symptoms and deciding as to its character and treatment, I place the patient in the same fixed position and adjust the X-ray tube within the same plane and about the point of focus on a radius as indicated at points A, B and C, taking X-rays at two or more points. It is in this type of work that the position of the subject must be maintained most accurately. It is particularly in this type of work when changing of plates or negatives in the bucky, that it is so important not to disturb the positioning of the subject.

In the present known form of X-ray tables I have found it impossible to X-ray the juncture of the spine to the skull to determine the relative rotation of the atlas in conjunction with the occipital bone. The employment of a hospital cot does not facilitate this procedure as we have no means of fixedly positioning the cot with relation to the bucky and at the same time permit uninterrupted access to the bucky in replacing film or plates during the operation of making stereoscopic negatives; therefore I do not claim a cot or table broadly, but what I do claim and desire to secure by Letters Patent is:

1. Radiographic apparatus comprising a source of radiant energy, a pair of vertically disposed spaced apart columns mounted upon a base constituting a main supporting frame operably associated with said source of radiant energy, a plate holder carriage mounted upon and adjustable in a vertical plane between said spaced apart columns, a plate holder, adjustable means for mounting said plate holder to said carriage whereby said plate holder is rotatably movable about its horizontal axis in a plane normal to the plane of travel of said carriage, a substantially horizontally disposed patient supporting table, and means for securing said table to one of said columns comprising the main supporting frame whereby the head of said table is spaced from

said supporting frame to provide an opening therebetween through which said plate holder is adapted to pass and be adjusted to a position whereby a portion of said plate holder will underlie the head of the table, the means of securement to and the spacing of said table from said main supporting frame facilitating uninterrupted access to said plate holder when in operative position.

2. Radiographic apparatus as per claim 1, which includes self-locking means whereby said table is removably secured to the main supporting frame, and means for supporting the table in its operative position independently of said self locking means.

3. Radiographic apparatus as per claim 1, in which the means by which said table is secured to only one column of said main supporting frame, is vertically adjustable upon said column.

4. Radiographic apparatus as per claim 1, which includes means carried by said plate holder for securing the patient's head in a fixed position during the time when exposures are being taken.

5. Radiographic apparatus comprising an X-ray generator carriage, an X-ray generator pivotally and adjustably mounted upon and carried by said carriage, a platform, a main supporting frame secured to said platform, said platform being capable of adjustment with relation to said generator carriage, said main supporting frame comprising a pair of parallel and spaced apart vertical columns rigidly secured to said platform, a plate holder carriage mounted upon and between said spaced apart columns and adapted to adjustment vertically with respect thereto, a plate holder adjustably secured to said plate holder carriage, the means of securement permitting adjustment of said plate holder about its horizontal axis and within the space between said columns, a table horizontally disposed with reference to said vertical columns and having a portion thereof positioned between said columns and said X-ray generator, said table being adjustably secured to one of said columns, the means of securement comprising a self locking substantially rigid connection, the head of said table being spaced from the columns of said main supporting frame to provide an opening between said columns and the head of the table through which opening it is contemplated said plate holder will pass upon adjustment to a position whereby only a portion of said plate holder will underlie the head of the table, means for supporting said table independently of said column securing means, the means of support and securement of said table to said columns and the spacing of the head of the table from said columns facilitating uninterrupted access to said plate holder when in any operative position.

6. An apparatus for use in taking X-rays of the head or adjacent body parts of a patient, comprising a standard consisting of a base, two laterally spaced and vertically disposed risers fastened to the base; a patient supporting table associated with said standard and supported at a higher elevation than the base with the longitudinal axis of the table transverse of the common plane of said risers and with the head end of the table spaced forwardly and away from said plane; a plate holder carriage comprising a frame spanning and vertically slidable on the two risers, and adjustable as to its elevation; two pairs of universal joint members mounted respectively upon the upper and lower portions of the frame, with the members of each pair respectively adjacent to the two risers; four plate-holder supporting rods extending across the said plane slidably respectively through the four universal joint members; releasable means latching each of the said four rods to the corresponding universal joint member; and a plate holder conjointly supported by and pivoted respectively to the forward ends of the four rods, the plate holder being disposed in the space between the head end of the table and the two spaced risers.

7. An apparatus as per claim 6, in which the pivoting of each of the said four rods is such as to permit the plate holder to be moved vertically and about its horizontal axis when the said latching means are loosened.

8. Radiographic apparatus as per claim 1, wherein the source of radiant energy is mobile and adjustable with respect to said plate holder so as to project a beam of X-rays in a path substantially normal to the plane of the plate holder to thereby properly energize an unexposed negative when carried by said plate holder when in any normally adjusted position.

IRVING GEORGE MOE.