P. R. GLASS.

MACHINE FOR INSERTING FASTENINGS.

APPLICATION FILED FEB. 17, 1915.

**1,199,887.**

Patented Oct. 3, 1916.

2 SHEETS—SHEET 1.

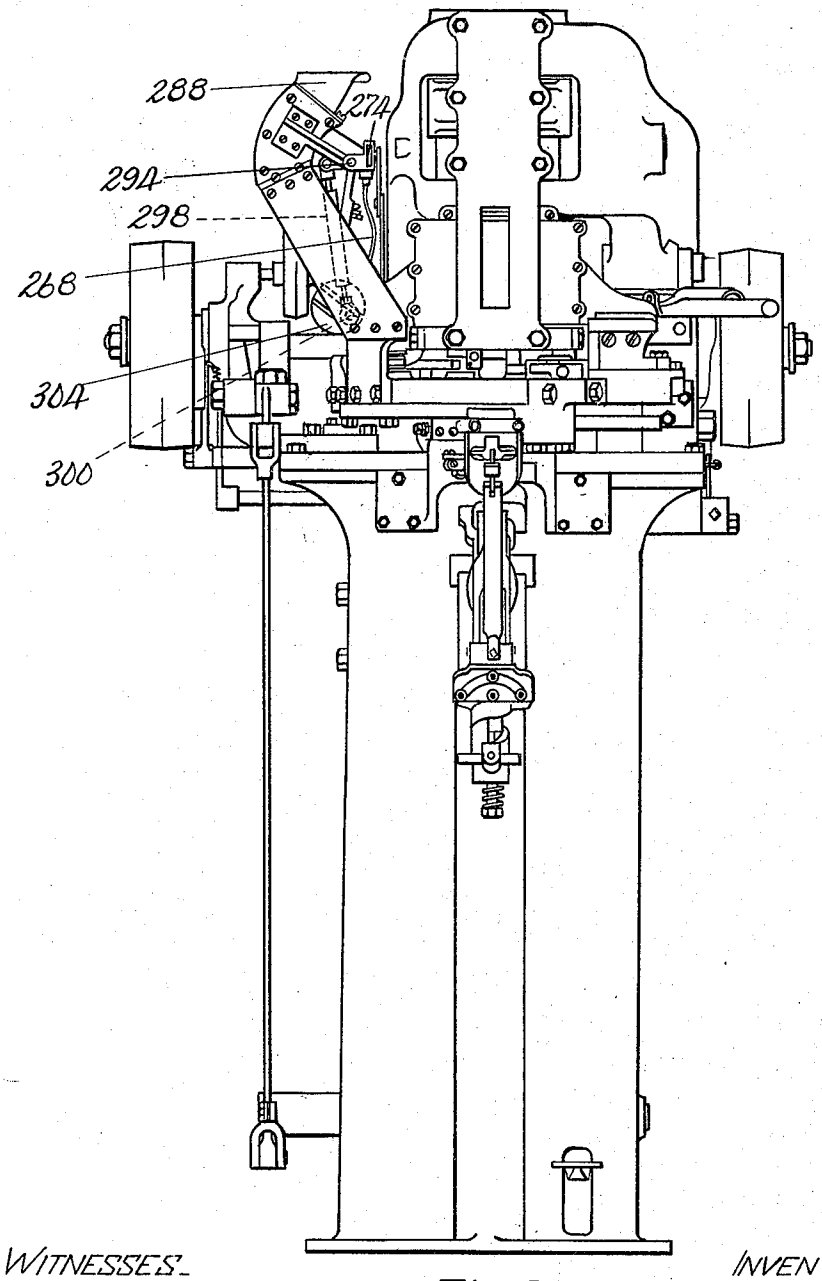


Fig. 1.

WITNESSES:

Elizabeth C. Cook

Edith C. Holbrook

INVENTOR.

Perley R. Glass

By his Attorney

Nelson W. Hunsicker

THE NORRIS PETERS CO., PHOTO-LITHO., WASHINGTON, D. C.

P. R. GLASS.

MACHINE FOR INSERTING FASTENINGS.

APPLICATION FILED FEB. 17, 1915.

1,199,887.

Patented Oct. 3, 1916.

2 SHEETS—SHEET 2.

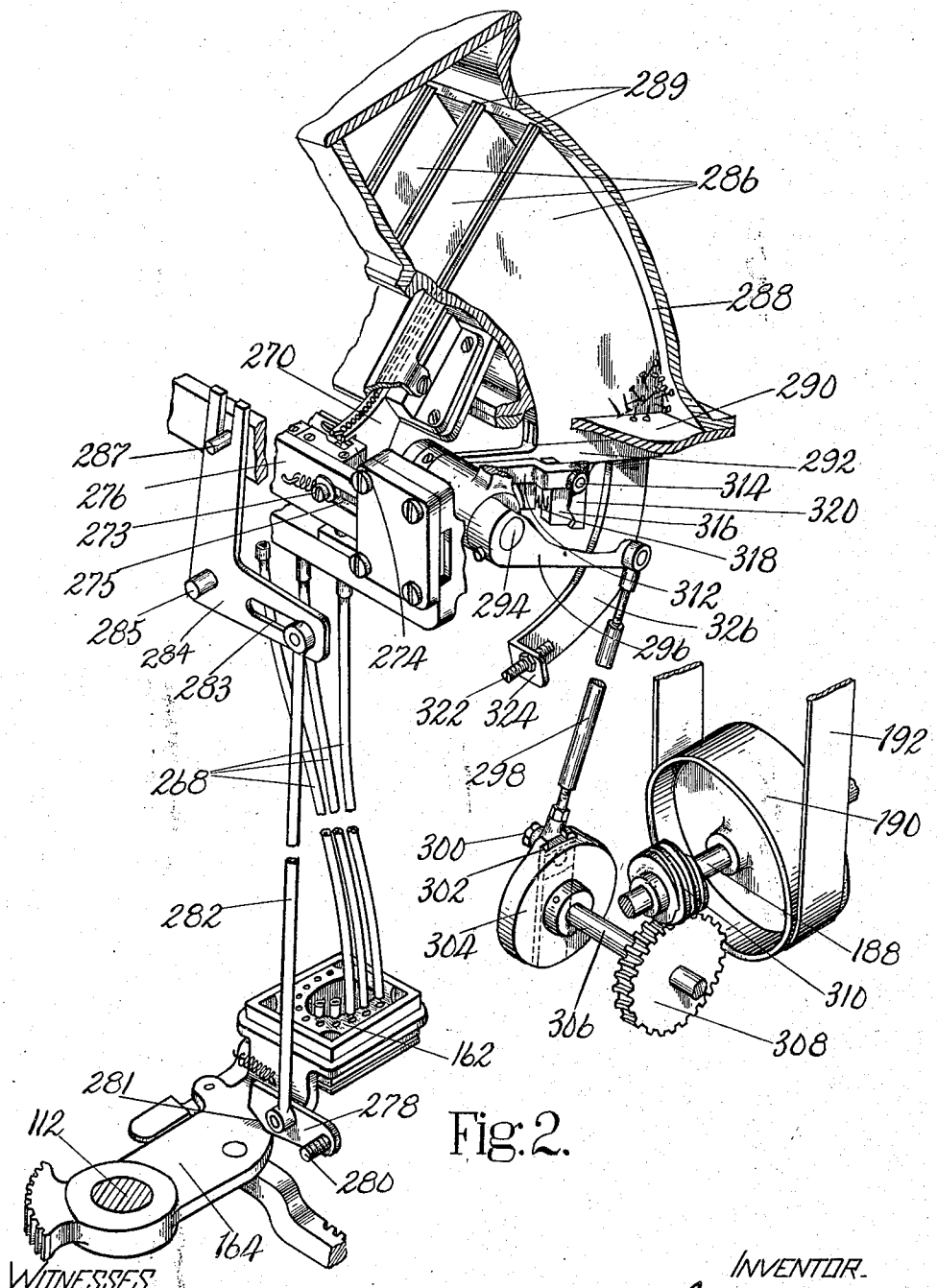


Fig. 2.

WITNESSES

Elizabeth C. Coyle

Edith C. Holbrook

INVENTOR.

Perley R. Glass

By his Attorney,

Nelson M. Hovey

THE NORRIS PETERS CO., PHOTO-LITHO., WASHINGTON, D. C.

# UNITED STATES PATENT OFFICE.

PERLEY R. GLASS, OF BROOKLINE, MASSACHUSETTS, ASSIGNOR TO UNITED SHOE MACHINERY COMPANY, OF PATERSON, NEW JERSEY, A CORPORATION OF NEW JERSEY.

## MACHINE FOR INSERTING FASTENINGS.

1,199,887. Specification of Letters Patent. Patented Oct. 3, 1916.

Original application filed March 9, 1910, Serial No. 548,139. Divided and this application filed February 17, 1915. Serial No. 8,702.

*To all whom it may concern:*

Be it known that I, PERLEY R. GLASS, a citizen of the United States, residing at Brookline, in the county of Norfolk and State of Massachusetts, have invented certain Improvements in Machines for Inserting Fastenings, of which the following description, in connection with the accompanying drawings, is a specification, like reference characters on the drawings indicating like parts in the several figures.

This invention relates to machines for inserting fastenings and particularly to fastening feeding mechanisms for use in machines of the type in which previously formed fastenings are assembled and delivered successively into position to be operated upon by the fastening inserting mechanism.

An object of the invention is to provide an improved fastening assembling and delivering mechanism which can be relied upon to furnish an uninterrupted supply of fastenings to the fastening inserting mechanism.

Another object of the invention is to provide a fastening assembling and delivering mechanism of such simple and compact construction that its parts may conveniently be duplicated for use in conjunction with a machine for inserting a plurality of individual nails at a single operation, as for example, in conjunction with a machine of the type shown and described in United States Letters Patent No. 1,132,926 granted Mar. 23, 1915 on application of Perley R. Glass.

In fastening feeding mechanisms of the type herein shown as heretofore constructed a positively operated fastening lifting device lifts the fastenings from a mass and deposits them upon a shelf leading to the raceway or directly upon a raceway down which they gravitate to the inserting mechanism. In such constructions clogging of the mechanism and injury to the fastenings frequently occurs owing to the lack of provisions for readjustment of the parts in the event that a misplaced fastening is encountered after the lifting movement begins.

A particular object of the invention, therefore, is to provide a fastening feeding mechanism in which such clogging of the mechanism and injury to the fastening is prevented and particularly to provide a fastening feeding mechanism having provisions for disconnection of the fastening lifting device from its operating means when unusual resistance is encountered, such as a misplaced nail, during its operative or fastening lifting movement.

Other objects and features of the invention will now be set forth in connection with the description of the mechanism shown in the accompanying drawings and will then be pointed out in the claims.

Figure 1 is a front elevation of a machine in which the invention is preferably embodied; Fig. 2 is a perspective view partly in section of a preferred embodiment of the nail feeding mechanism of this invention.

For convenience in understanding the invention the reference characters employed in the following description will be the same so far as practicable as those employed in designating like parts in the above mentioned patent to which reference should be had for a complete understanding of the construction of the machine in which this invention is preferably embodied. As fully explained in said patent the nails are delivered to the nail block, from which they are driven by the gang of drivers, by a nail loader 162 carried on the outer end of an arm 164 of a lever fulcrumed upon the rock shaft 112, through which lever the nail loader is moved between nail receiving position and nail delivering position.

The means for supplying nails to the nail loader when in nail receiving position comprises a plurality of flexible nail tubes 268 one for each nail opening in the nail loader, these tubes guiding the nails from a corresponding plurality of raceways 270 into openings in a plate arranged above the corresponding openings in the nail loader when it is in nail receiving position. Coöperating with each of the raceways is a nail separator 274 which has a yielding pin and slot connection 273, 275 with a common separator bar 276 through which all of the separators are operated simultaneously to deliver nails to the tubes 268. Means is provided through which the bar 276 is operated as the nail loader comes into nail receiving position. This means comprises a lever 278 pivoted at

280 upon the machine frame and having an end 281 arranged to be engaged and lifted by the lever arm 164 as the nail loader comes into nail receiving position. Pivotally connected to the lever 278 intermediate its ends is a rod 282 the upper end of which is adjustably confined in a slot 283 in one arm of an angle lever 284 pivoted at 285 to the frame, the other arm of the lever being forked to engage a pin 287 on the side 276.

The raceways are supplied with nails by segmental lifting plates 286, one for each raceway, which travel in guides 289 in the walls of a nail pot or holder 288, the plates 286 passing through openings in the bottom 290 of the nail pot and being carried upon arms 292 loosely mounted upon the rock-shaft 294. Rigidly attached to the rock-shaft 294 is a crank arm 296 to the outer end of which is connected a rod 298.

The rod 298 receives at its lower end a wrist pin 300 which is adjustable in a dove-tailed groove 302 in a crank wheel 304 upon a cross-shaft 306. The shaft 306 is driven by a worm and gear wheel connection 310, 308 with the shaft 188 which receives its motion from a driving pulley 190 connected by a belt 192 with a suitable source of power. Rotation of the shaft 306 effects, through the rod 298, an oscillation of the lifting plates 286 with the shaft 294. The connections between the shaft 294 and the lifting plates 286 comprise a pawl carrying arm 312 rigidly attached to the shaft 294 and having pivoted at 314 a pawl 316 which is pressed by a spring 318, located between a downward projection of the arm 312 and the back side of the pawl, toward a catch 320 upon the arm 292. The pawl and catch are so shaped that if the lifting plate in its upward movement meets an obstacle, such as a misplaced nail, the pawl 316 will slip over the catch 320 and permit the plate to drop back to its lowermost position. This position is preferably determined by an adjustable stop which engages a portion of the machine frame comprising a bolt 322 confined by nuts in an offset portion 324 of an arc-shaped supporting bar 326 attached to the bottom 290 of the nail pot and extending along the path of movement of the lifting plate 286, there being one of these stop supporting bars for each lifting plate. The shaft 188 is preferably constantly rotated and the lifting plates 286 are therefore constantly oscillated with the shaft 294, between nail receiving positions in the bottom of the nail pot and nail delivering positions in alinement with the raceways, thus keeping the raceways 270 supplied with nails.

Having fully described my invention, what I claim as new and desire to secure by Letters Patent of the United States is:—

1. In a nailing machine, a nail holder, a plurality of nail lifting plates guided in said holder, a plurality of raceways opening through said holder into which said lifting plates are arranged to deliver nails, a single means for operating said lifting plates, and means for connecting each of said lifting plates to the operating means constructed to permit disconnection of said parts when unusual resistance is encountered during its movement into nail delivering position.

2. In a nailing machine, a nail holder, a nail lifting plate guided in said holder, a raceway opening through said holder into which said lifting plate is arranged to deliver nails, and means arranged to move said lifting plate yieldingly into position to deliver nails to the raceway, said means being provided with a safety release whereby the movement of the lifting plate into nail delivering position is interrupted when unusual resistance is encountered during its movement into said position.

3. In a nailing machine, a nail holder, a nail lifting plate guided in said holder, a raceway opening through said holder and into which said lifting plate is arranged to deliver nails, means for operating said nail lifting plate, and means constructed to insure the automatic disconnection of the lifting plate from its operating means when unusual resistance is encountered during the upward movement of the lifting plate.

4. In a nailing machine a stationary nail holder having concentrically curved front and rear walls, an oscillating segmental nail lifting plate guided between said walls, a raceway opening through one of said walls into which said lifting plate is arranged to deliver nails, means for oscillating said lifting plate, and means constructed to insure the automatic suspension of further upward movement of the lifting plate when unusual resistance is encountered during its movement into nail delivering position.

5. In a nailing machine, a nail holder having concentrically curved front and rear walls, a plurality of segmental lifting plates guided between said walls, a plurality of raceways opening through one of said walls into which said lifting plates are arranged to deliver nails, means for operating said lifting plates, and means for predeterminately controlling the nail lifting power of said lifting plates independently of the power applied to said operating means.

6. In a nailing machine, a nail holder having concentrically curved front and rear walls, a plurality of segmental lifting plates guided between said walls, a plurality of raceways opening through one of said walls into which said lifting plates are arranged to deliver nails, and a single means for operating said lifting plates.

7. In a nailing machine, a nail holder having concentrically curved front and rear

walls, a plurality of raceways opening through one of said walls, a corresponding plurality of segmental lifting plates guided through openings in the bottom of said nail holder and arranged to be moved between nail receiving and nail delivering positions about an axis lying outside of said holder to deliver nails to said raceways, a rock-shaft for operating said lifting plates and connections between each of said lifting plates and said rock-shaft constructed to be interrupted when unusual resistance is offered to the upward movement of said plate.

8. In a nailing machine, a nail holder, a nail raceway opening into said holder, a lifting plate provided with a nail guiding groove which, when said plate is in its uppermost position, forms a continuation of said raceway, and means for moving said lifting plate from nail receiving into nail delivering position constructed and arranged to permit said lifting plate to drop back to nail receiving position before it reaches the nail delivering position in case of clogging.

9. In a nailing machine, a nail holder having concentrically curved front and rear walls, a raceway opening through the wall having the shorter radius of curvature, a segmental lifting plate guided through an opening in the bottom of said nail holder and provided with a nail guiding groove which forms a continuation of said raceway when said lifting plate is in its nail delivering position, and means turning about the center of curvature of said walls for moving said lifting plate between nail receiving and nail delivering positions.

In testimony whereof I have signed my name to this specification in the presence of two subscribing witnesses.

PERLEY R. GLASS.

Witnesses:
HENRY KAHLMEYER,
WILLIAM B. KING.

**Copies of this patent may be obtained for five cents each, by addressing the "Commissioner of Patents, Washington, D. C."**