US 20060129937A1

(19) United States

(12) Patent Application Publication (10) Pub. No.: US 2006/0129937 A1

Shafron (43) Pub. Date: Jun. 15, 2006

(54) METHOD OF CONTROLLING AN INTERNET BROWSER INTERFACE AND A CONTROLLABLE BROWSER INTERFACE

(75) Inventor: **Thomas J. Shafron**, Miami Beach, FL (US)

Correspondence Address:
GREENBERG TRAURIG, LLP
MET LIFE BUILDING
200 PARK AVENUE
NEW YORK, NY 10166 (US)

(73) Assignee: **Yahoo! Inc.**, Sunnyvale, CA (US)

(21) Appl. No.: **11/347,150**

(22) Filed: **Feb. 2, 2006**

Related U.S. Application Data

(62) Division of application No. 09/429,585, filed on Oct. 28, 1999.

(60) Provisional application No. 60/106,002, filed on Oct. 28, 1998.

Publication Classification

(51) **Int. Cl.**
G06F 3/00 (2006.01)
G06F 9/00 (2006.01)
G06F 17/00 (2006.01)

(52) **U.S. Cl.** **715/733**; 715/744; 715/760; 715/741

(57) **ABSTRACT**

The present invention is directed to a method of dynamically controlling and displaying an Internet browser interface, and to a dynamically controllable Internet browser interface. In accordance with the present invention, a browser interface may be customized using a controlling software program that may be provided by an Internet content provider, an ISP, or that may reside on an Internet user's computer. The controlling software program enables the Internet user, the content provider, or the ISP to customize and control the information and/or functionality of a user's browser and browser interface.

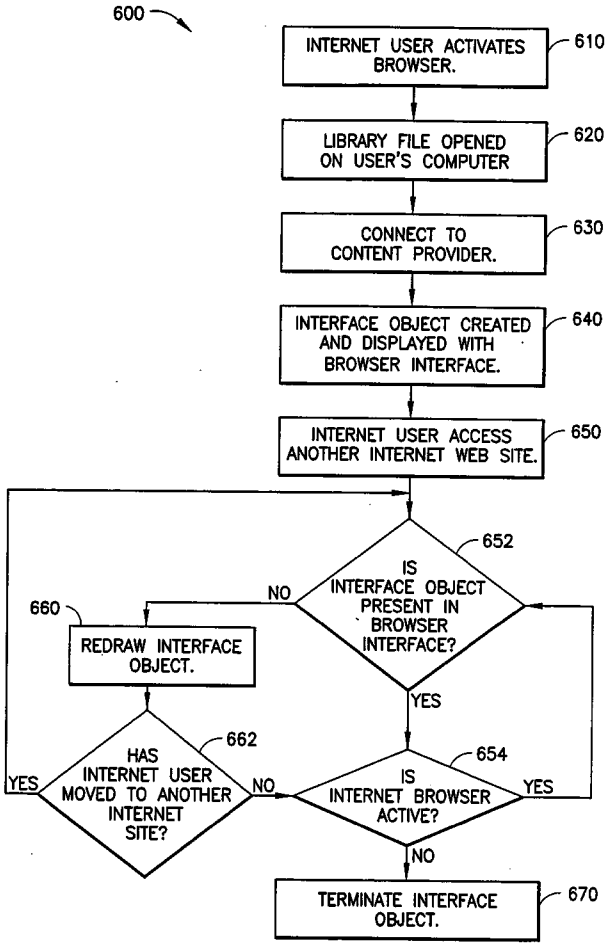

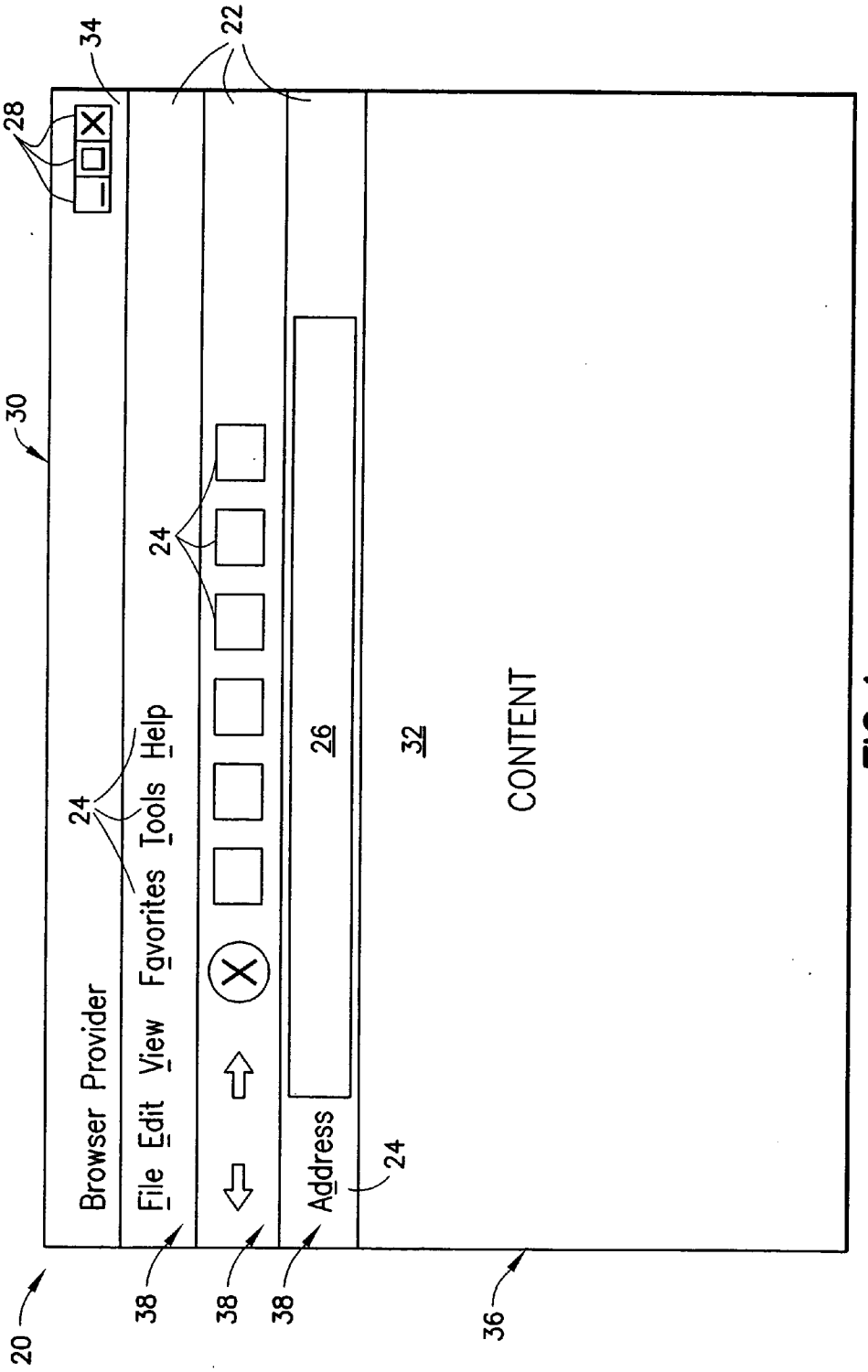

FIG. 1
PRIOR ART

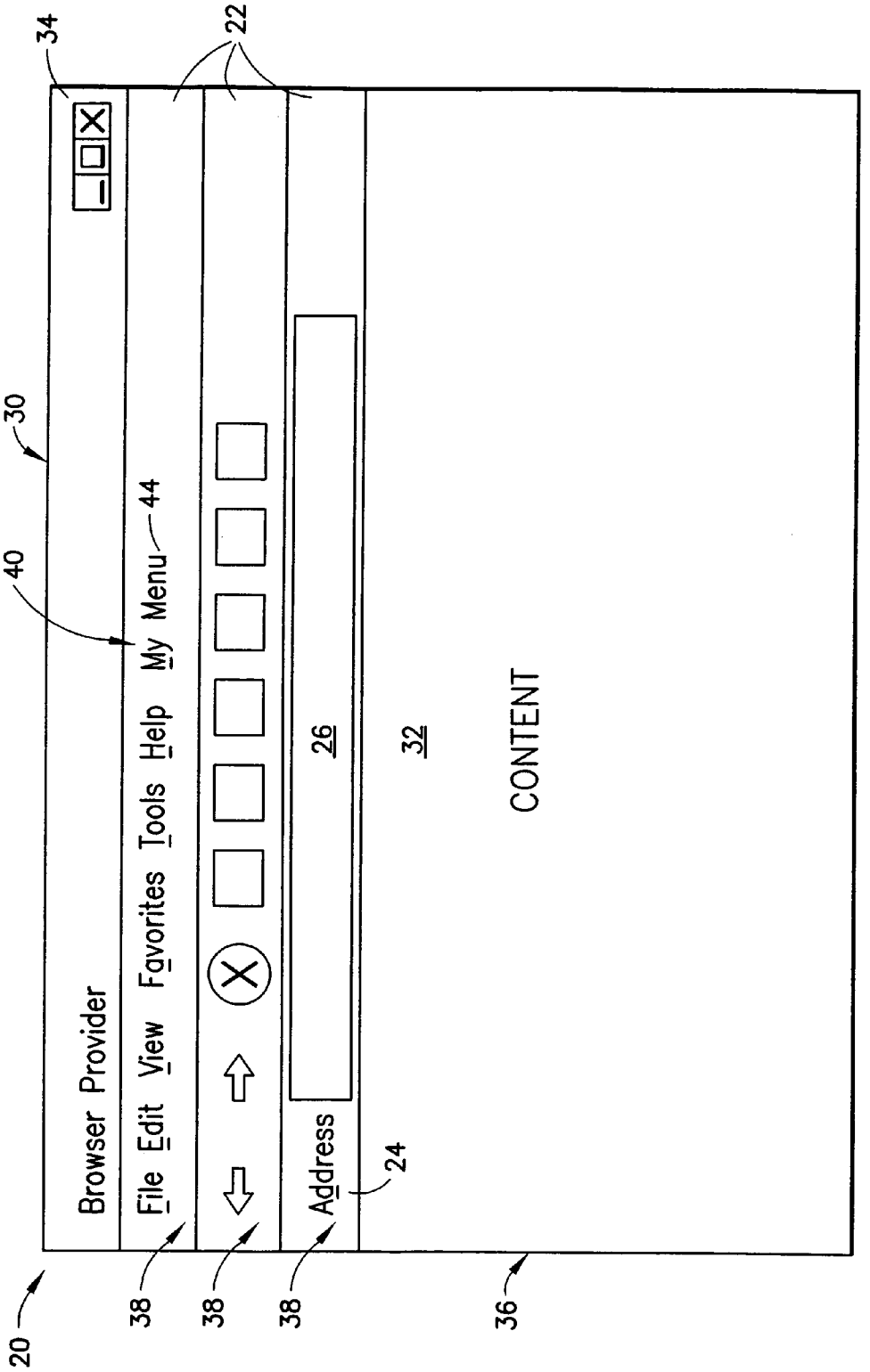
34
22
30
40
44
Browser Provider
File Edit View Favorites Tools Help My Menu
26
32
CONTENT
Address
24
20
38
38
38
36

FIG.2

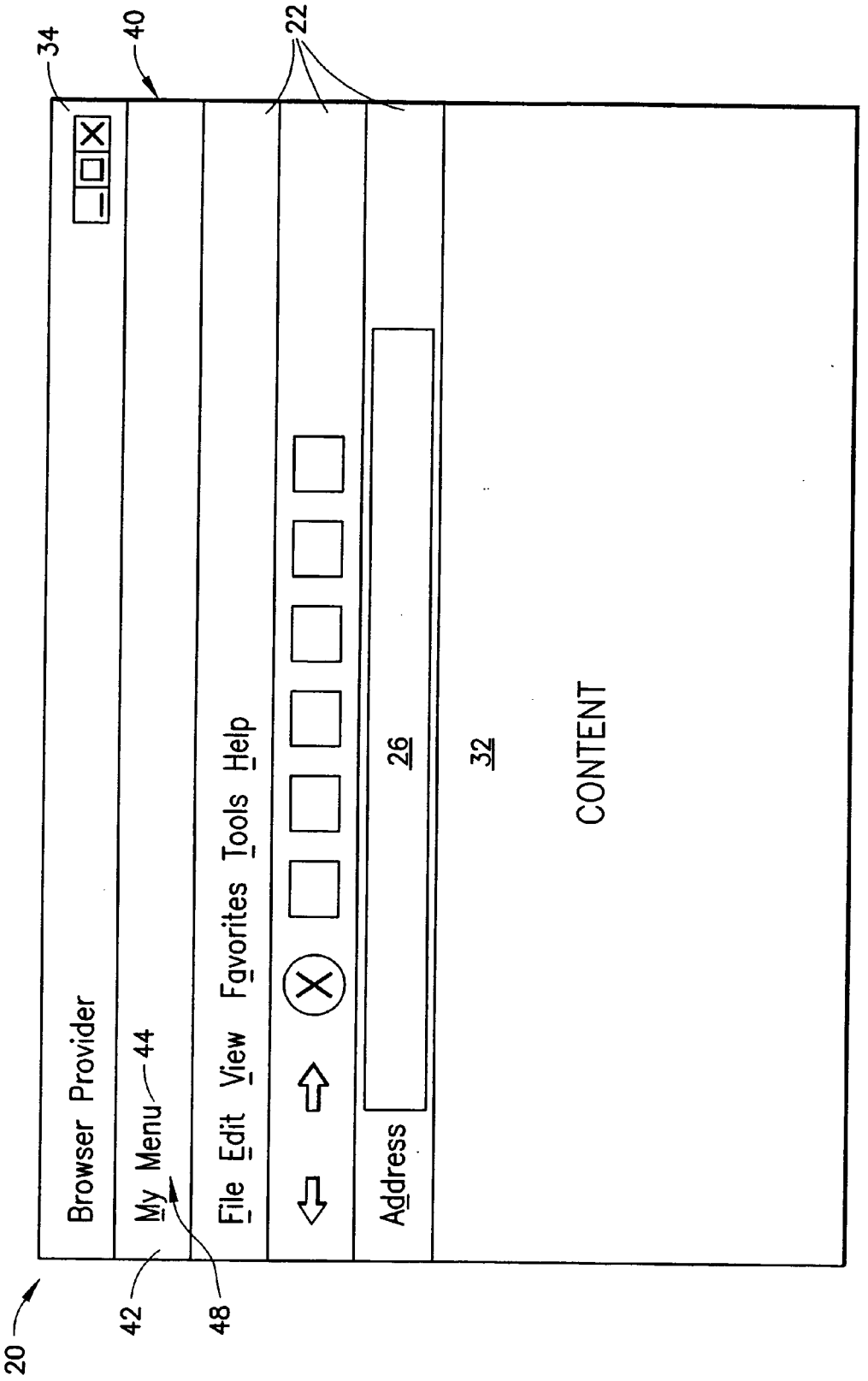
20
34
40
22
Browser Provider
My Menu
44
42
48
File Edit View Favorites Tools Help
Address
26
32
CONTENT

FIG.3

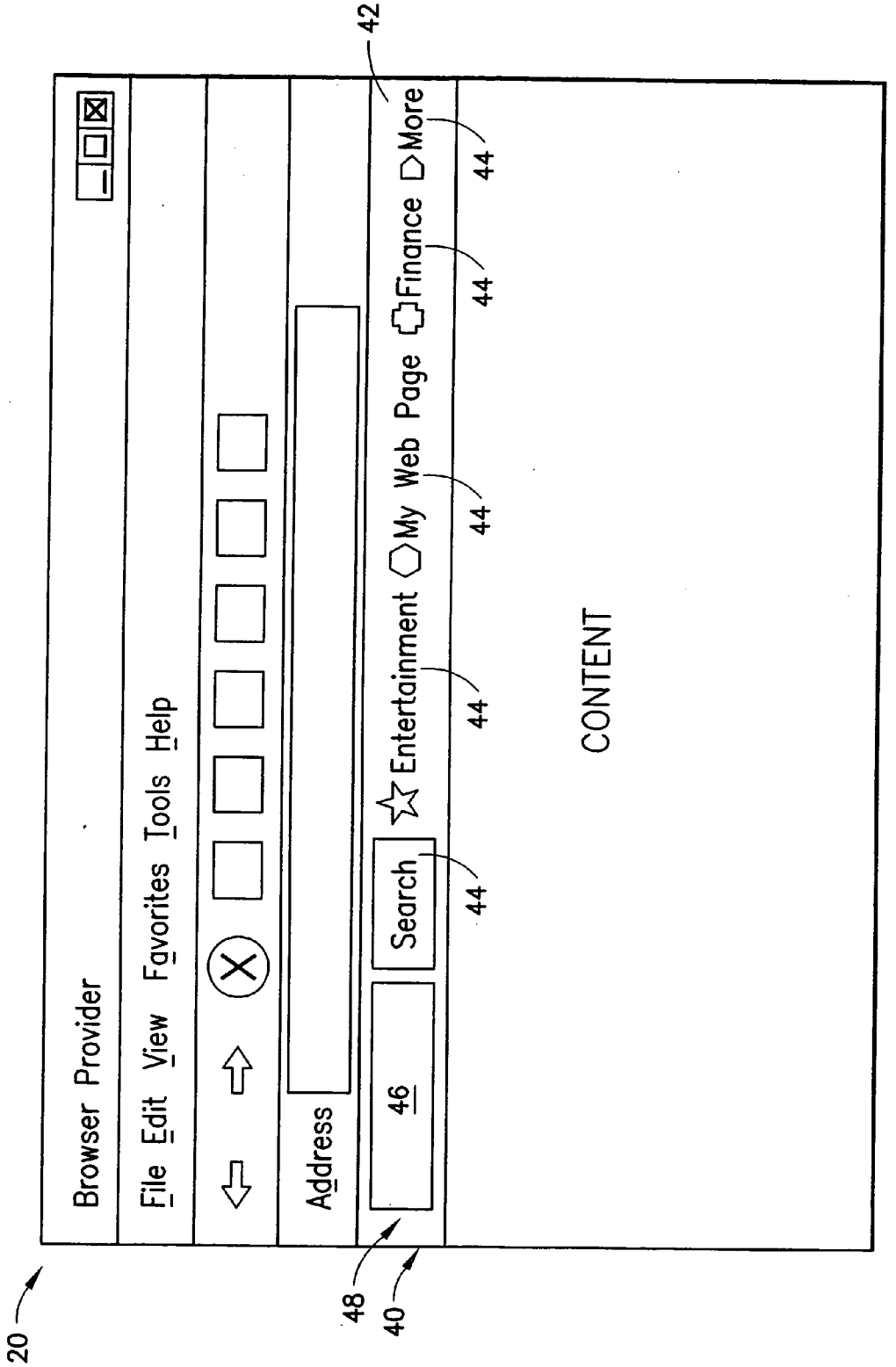
20
Browser Provider
File Edit View Favorites Tools Help
Address
46
Search
Entertainment
My Web Page
Finance
More
CONTENT
40
42
44
48

FIG.4

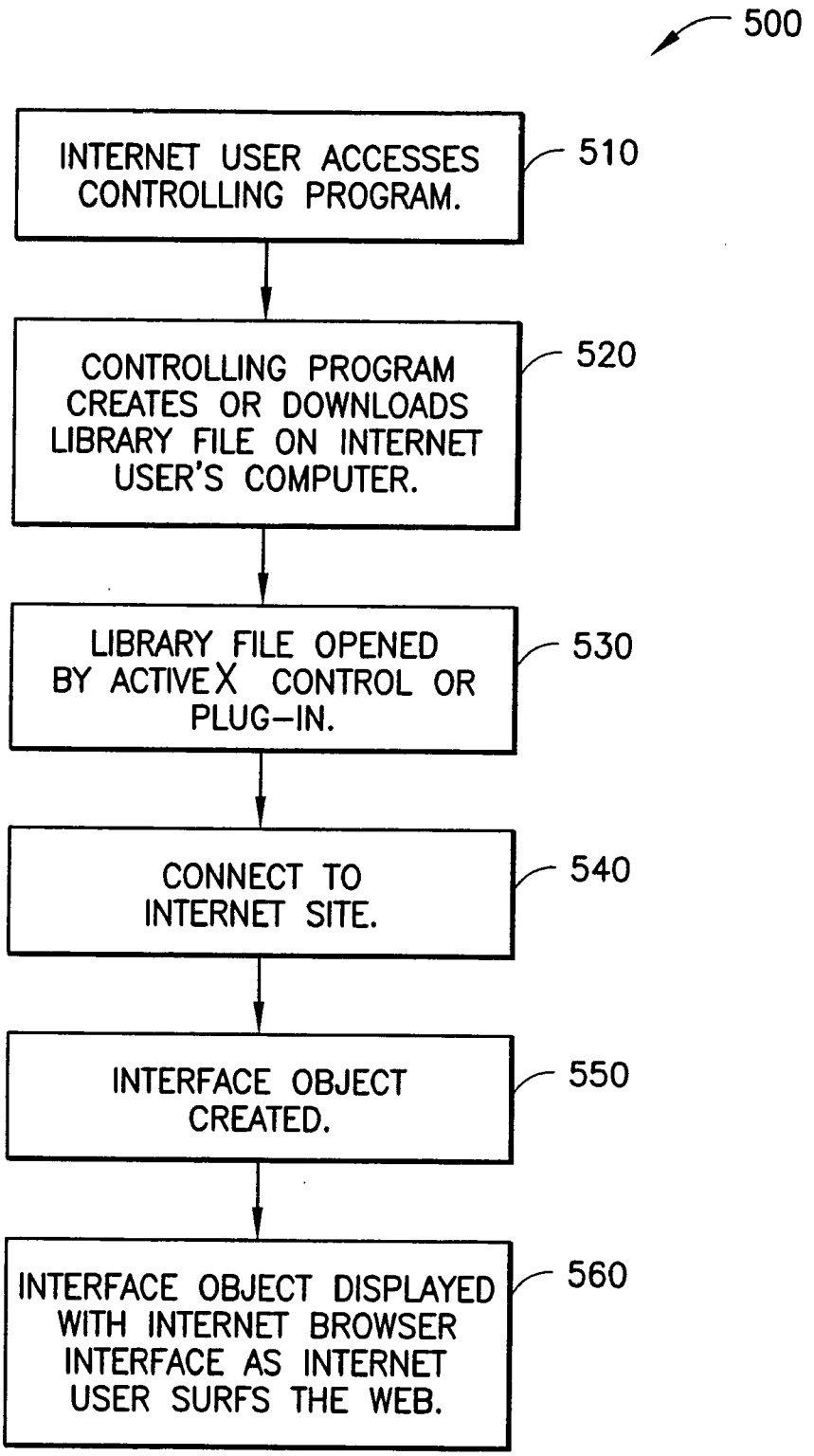
500
INTERNET USER ACCESSES CONTROLLING PROGRAM.
510
CONTROLLING PROGRAM CREATES OR DOWNLOADS LIBRARY FILE ON INTERNET USER'S COMPUTER.
520
LIBRARY FILE OPENED BY ACTIVEX CONTROL OR PLUG-IN.
530
CONNECT TO INTERNET SITE.
540
INTERFACE OBJECT CREATED.
550
INTERFACE OBJECT DISPLAYED WITH INTERNET BROWSER INTERFACE AS INTERNET USER SURFS THE WEB.
560

FIG.5

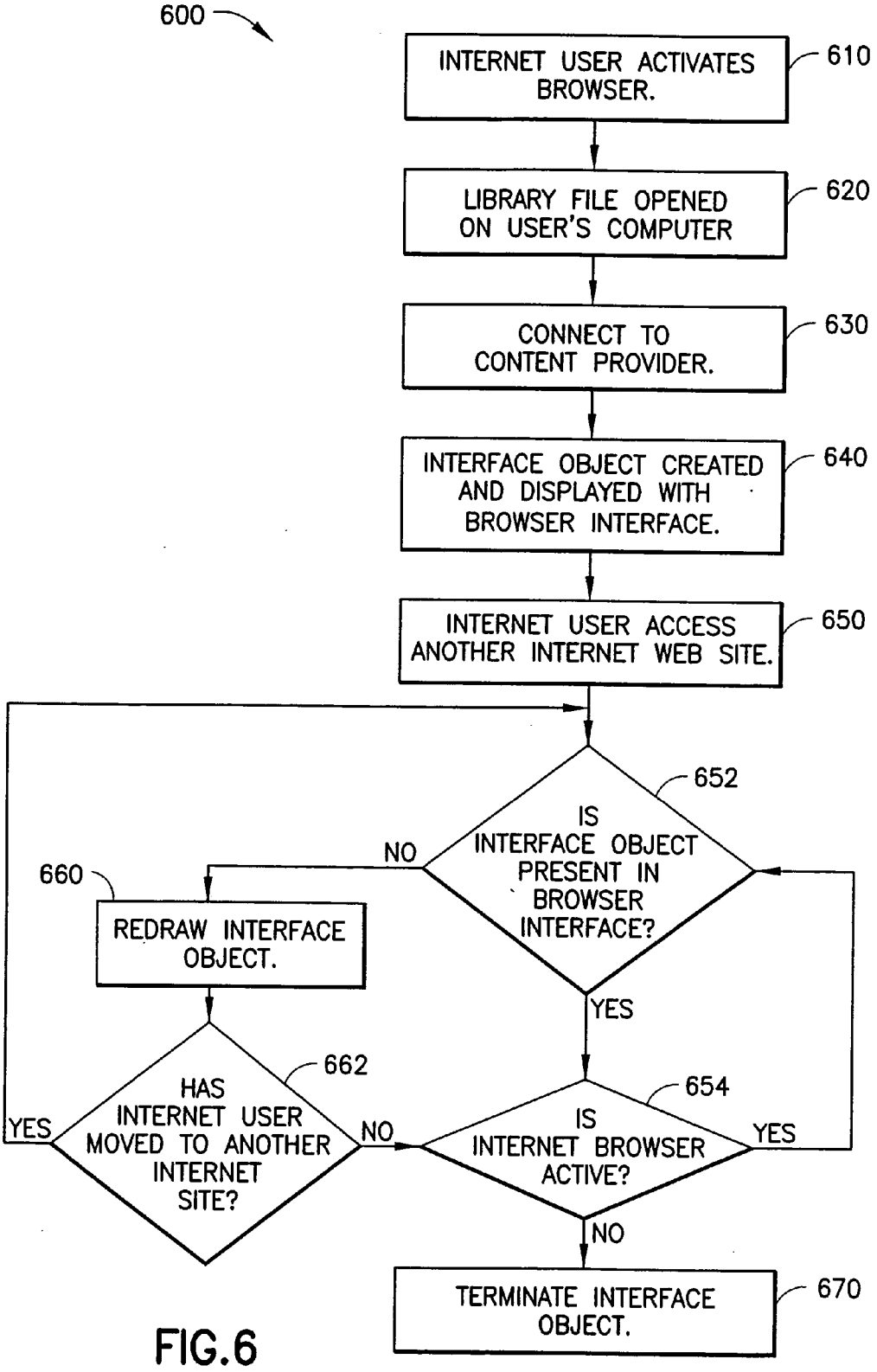
600
INTERNET USER ACTIVATES BROWSER.
610
LIBRARY FILE OPENED ON USER'S COMPUTER
620
CONNECT TO CONTENT PROVIDER.
630
INTERFACE OBJECT CREATED AND DISPLAYED WITH BROWSER INTERFACE.
640
INTERNET USER ACCESS ANOTHER INTERNET WEB SITE.
650
652
IS INTERFACE OBJECT PRESENT IN BROWSER INTERFACE?
NO
660
REDRAW INTERFACE OBJECT.
YES
662
HAS INTERNET USER MOVED TO ANOTHER INTERNET SITE?
YES
NO
654
IS INTERNET BROWSER ACTIVE?
YES
NO
TERMINATE INTERFACE OBJECT.
670

FIG.6

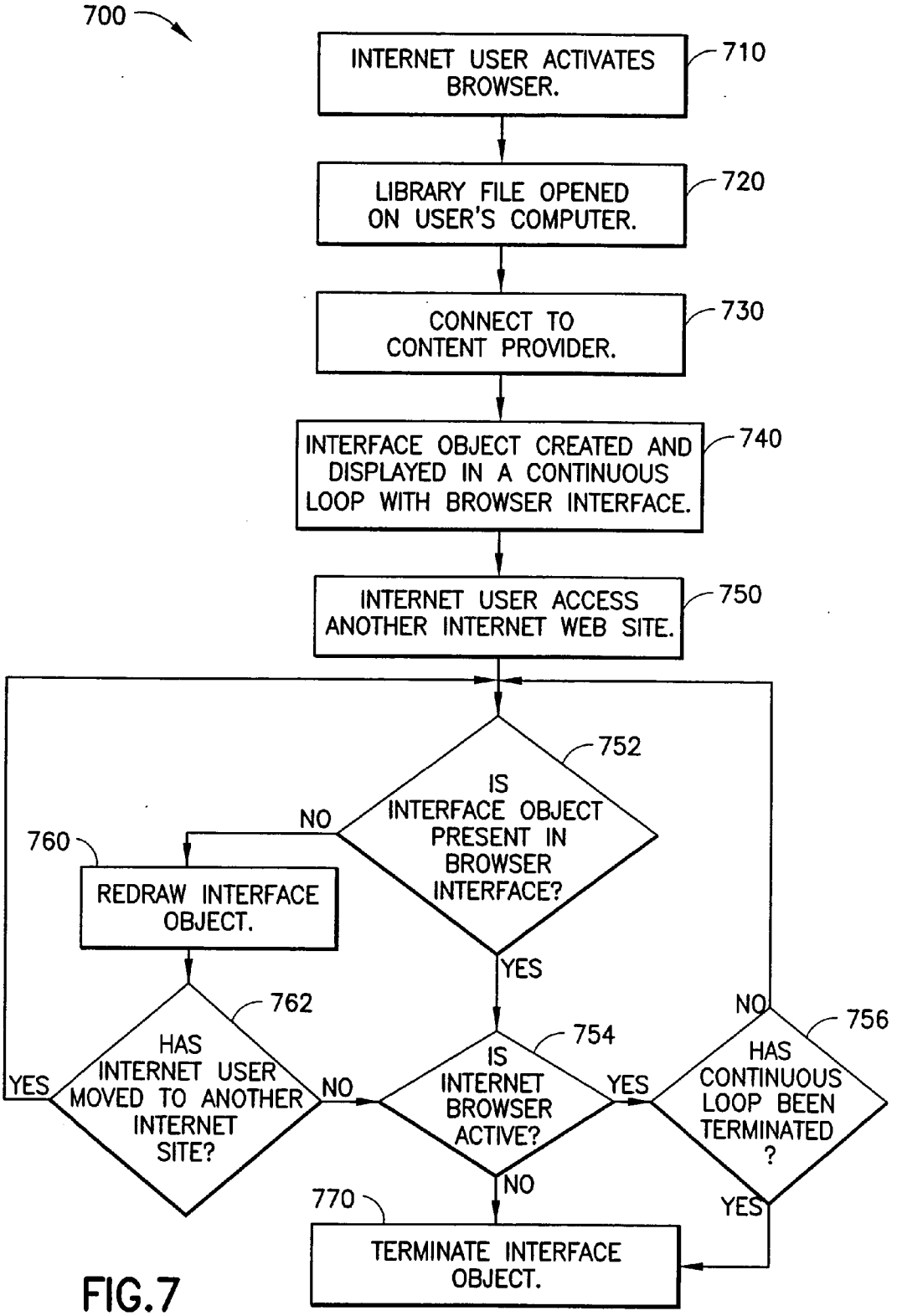
700
INTERNET USER ACTIVATES BROWSER.
710
LIBRARY FILE OPENED ON USER'S COMPUTER.
720
CONNECT TO CONTENT PROVIDER.
730
INTERFACE OBJECT CREATED AND DISPLAYED IN A CONTINUOUS LOOP WITH BROWSER INTERFACE.
740
INTERNET USER ACCESS ANOTHER INTERNET WEB SITE.
750
752
IS INTERFACE OBJECT PRESENT IN BROWSER INTERFACE?
NO
760
REDRAW INTERFACE OBJECT.
YES
762
HAS INTERNET USER MOVED TO ANOTHER INTERNET SITE?
YES
NO
754
IS INTERNET BROWSER ACTIVE?
YES
NO
756
HAS CONTINUOUS LOOP BEEN TERMINATED ?
NO
YES
770
TERMINATE INTERFACE OBJECT.

FIG.7

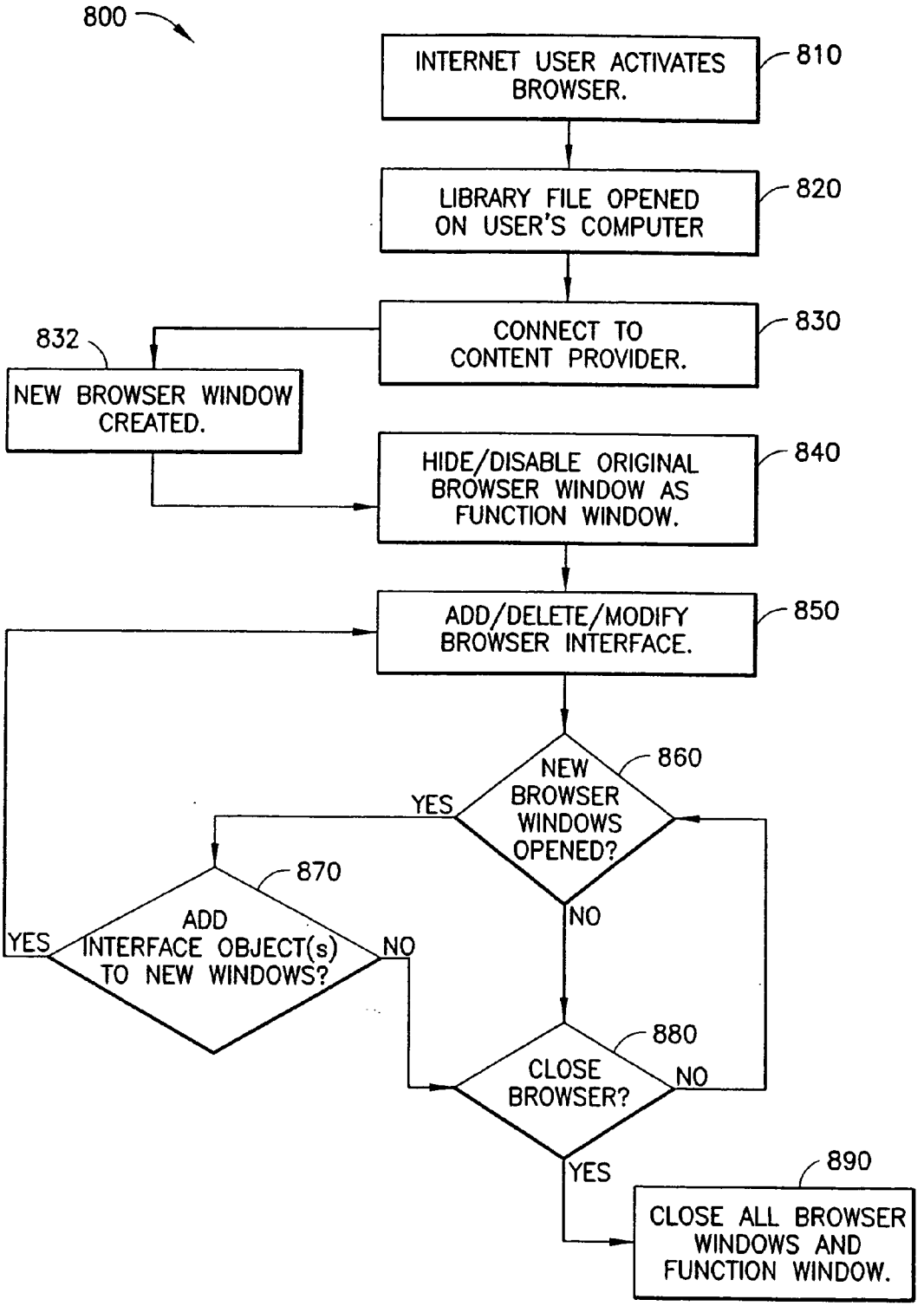
800
INTERNET USER ACTIVATES BROWSER.
810
LIBRARY FILE OPENED ON USER'S COMPUTER
820
CONNECT TO CONTENT PROVIDER.
830
832
NEW BROWSER WINDOW CREATED.
HIDE/DISABLE ORIGINAL BROWSER WINDOW AS FUNCTION WINDOW.
840
ADD/DELETE/MODIFY BROWSER INTERFACE.
850
NEW BROWSER WINDOWS OPENED?
860
YES
NO
ADD INTERFACE OBJECT(s) TO NEW WINDOWS?
870
YES
NO
CLOSE BROWSER?
880
NO
YES
CLOSE ALL BROWSER WINDOWS AND FUNCTION WINDOW.
890

FIG.8A

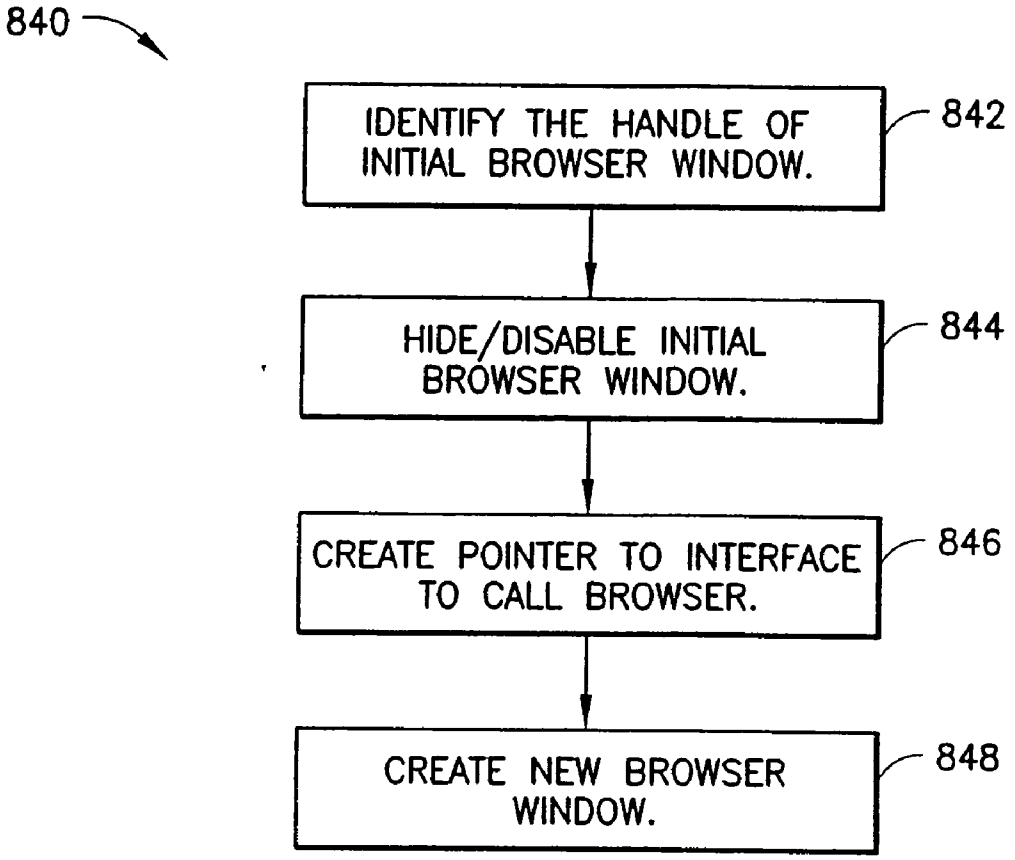
840
IDENTIFY THE HANDLE OF INITIAL BROWSER WINDOW.
842
HIDE/DISABLE INITIAL BROWSER WINDOW.
844
CREATE POINTER TO INTERFACE TO CALL BROWSER.
846
CREATE NEW BROWSER WINDOW.
848

FIG. 8B

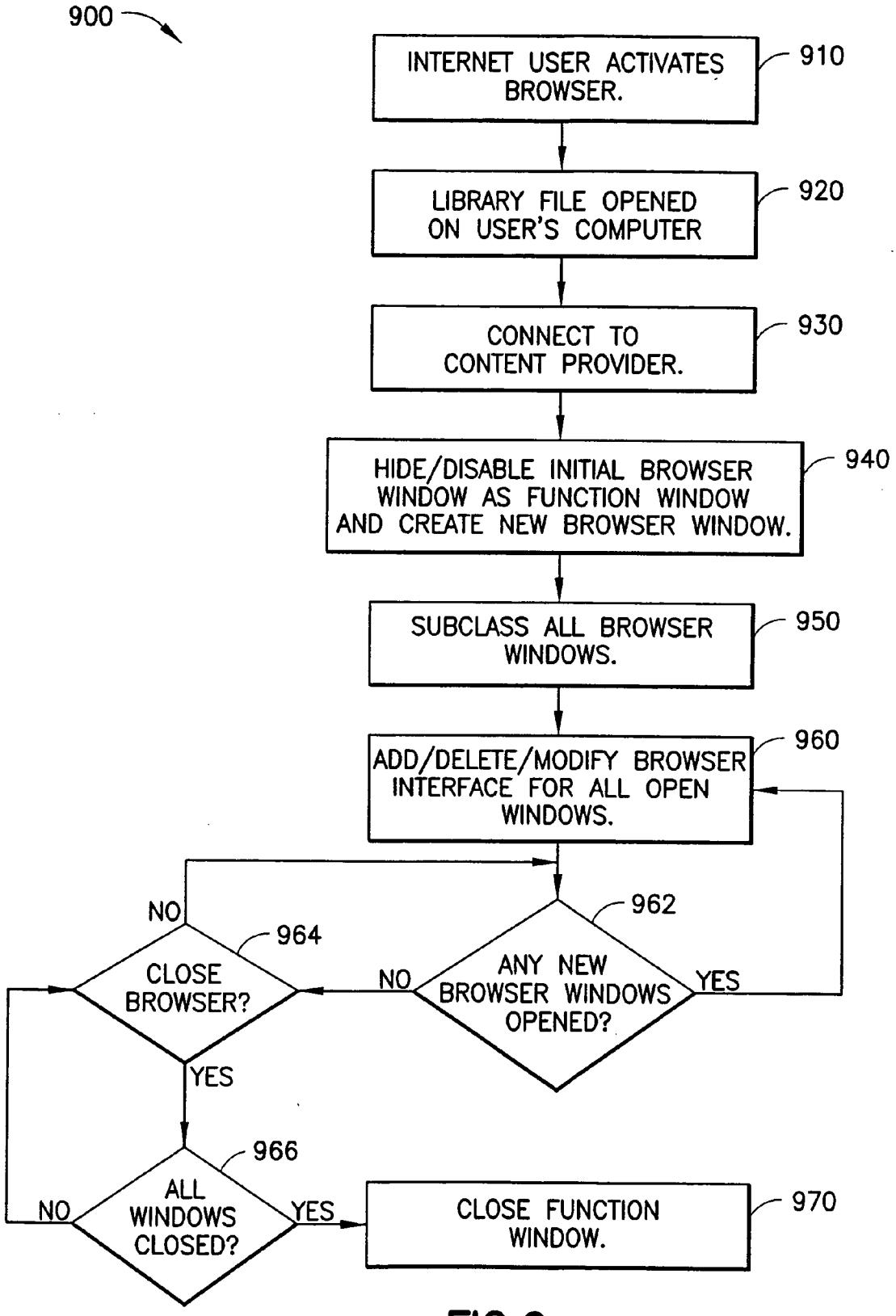
900
INTERNET USER ACTIVATES BROWSER.
910
LIBRARY FILE OPENED ON USER'S COMPUTER
920
CONNECT TO CONTENT PROVIDER.
930
HIDE/DISABLE INITIAL BROWSER WINDOW AS FUNCTION WINDOW AND CREATE NEW BROWSER WINDOW.
940
SUBCLASS ALL BROWSER WINDOWS.
950
ADD/DELETE/MODIFY BROWSER INTERFACE FOR ALL OPEN WINDOWS.
960
962
ANY NEW BROWSER WINDOWS OPENED?
YES
NO
964
CLOSE BROWSER?
NO
YES
966
ALL WINDOWS CLOSED?
NO
YES
CLOSE FUNCTION WINDOW.
970

FIG.9

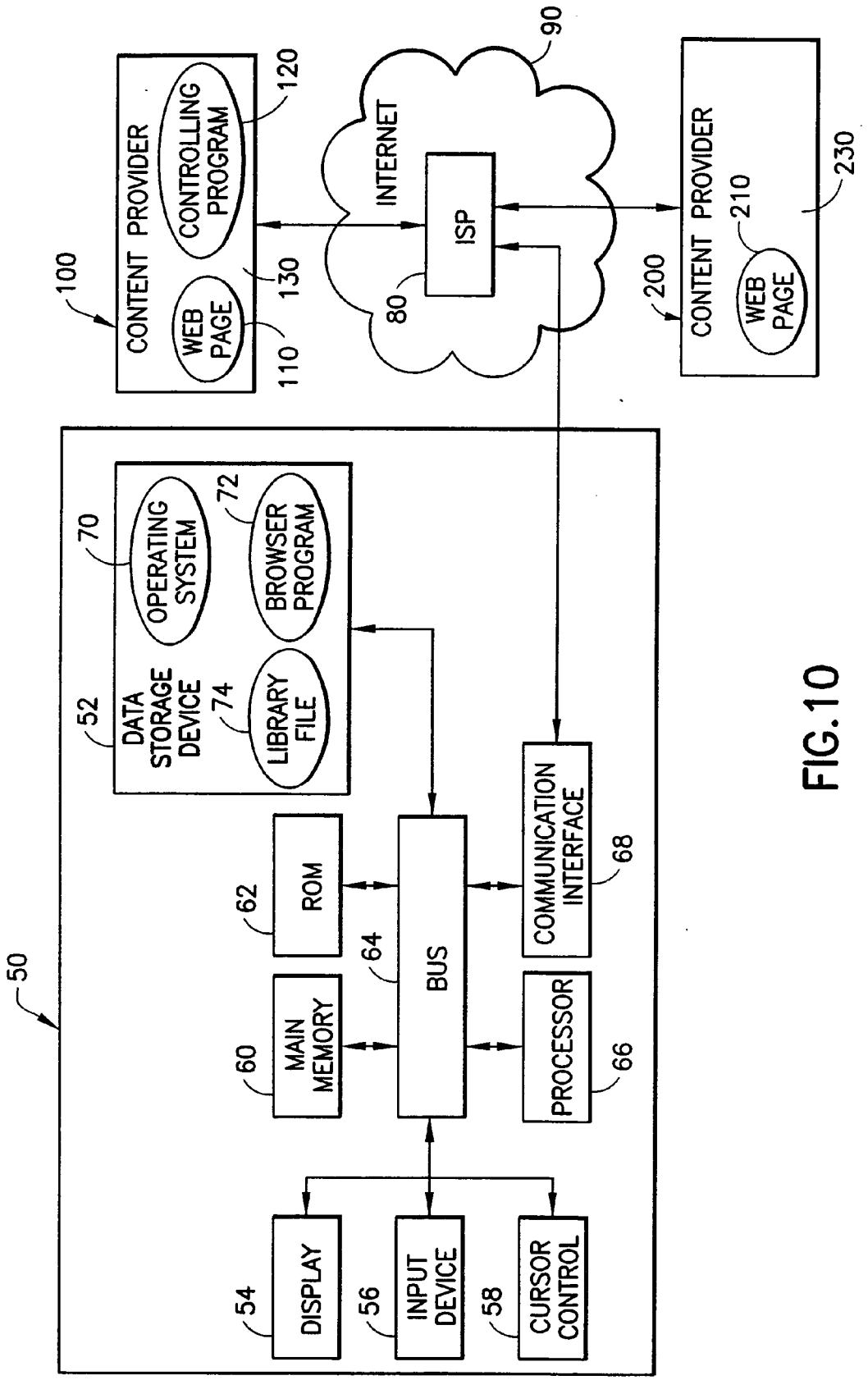
50
100
CONTENT PROVIDER
CONTROLLING PROGRAM
120
WEB PAGE
110
130
90
INTERNET
ISP
80
200
CONTENT PROVIDER
210
WEB PAGE
230
52
DATA STORAGE DEVICE
70
OPERATING SYSTEM
72
BROWSER PROGRAM
74
LIBRARY FILE
62
ROM
64
BUS
68
COMMUNICATION INTERFACE
60
MAIN MEMORY
66
PROCESSOR
54
DISPLAY
56
INPUT DEVICE
58
CURSOR CONTROL

FIG.10

METHOD OF CONTROLLING AN INTERNET BROWSER INTERFACE AND A CONTROLLABLE BROWSER INTERFACE

FIELD OF THE INVENTION

[0001] The present invention is directed to computer display interfaces and, more particularly, to a method of dynamically controlling an Internet browser interface and a dynamically controllable browser interface.

BACKGROUND OF THE INVENTION

[0002] When accessing the Internet (i.e., the worldwide web, the web, etc.), an Internet user typically executes, via a computer, a browser software program such as, for example, Netscape Navigator™ or Microsoft Internet Explorer™. The browser program (i.e., a browser) establishes a physical link to the Internet (via a modem and an Internet Service Provider (ISP), for example) and also provides a textual and graphical user interface, i.e., a browser interface, having a predetermined look and functionality, neither of which can currently be significantly changed by the Internet user. Thus, the browser interface remains relatively static as the Internet user navigates the Internet and moves from application to application or HTML (Hyper-text Mark-up Language) page to HTML page.

[0003] Limited control of the browser interface is currently available via an executable software program that may, for example, add functional buttons to the interface. However, the additional functionality is added to the browser interface when the browser is initially activated and remains static thereafter. Thus, it is not possible for a browser displaying a browser interface modified as just-described to dynamically download information from an Internet site and customize itself, either when the browser is initiated or as the users traverses the Internet. Such a modified browser interface also does not provide access to the various browser Application Programming Interfaces (APIs) for Plug-ins and interfaces.

[0004] The proliferation of Internet sites makes it increasingly difficult for content providers (i.e., owners of Internet sites) to maximize the time an Internet user spends at a particular Internet site. It is, of course, desirable for a content provider to be able to maximize that time an Internet user spends at that provider's Internet site, or to ensure that an Internet user returns to the content provider's site; this being generally referred to in the art as stickiness. It is also desirable to maximize the number of Internet users accessing a content provider's site. Briefly stated, an Internet content provider wants to attract a maximum number of Internet users to that provider's Internet site, and to maximize the amount of time those Internet users remain at that site; neither of which is possible using current Internet browsers.

SUMMARY OF THE INVENTION

[0005] The present invention is directed to a method of dynamically controlling an Internet browser interface and to a dynamically controllable browser interface. The present invention is also directed to a method of increasing the number of times an Internet user accesses a predetermined Internet site, and to a method of increasing the amount of time an Internet user spends at a predetermined Internet site.

[0006] As used herein, the term controlling and controllable refer to, by way of non-limiting example, adding to, removing from, and modifying an Internet browser interface. An Internet browser interface, as referred to herein, means the visual or aural presentation presented to a browser user, and via which a user interacts with the browser. The term customize (and variations thereof) may also be used herein to describe the controllability provided in accordance with the present invention. As used herein, the term dynamically controlling (and variations thereof) refers to a method by which a part of an Internet browser interface (i.e., an interface object) may be displayed and periodically changed or updated while a browser displaying the interface object is activated.

[0007] A browser, as used herein, is given its general, art recognized meaning, and generally refers to a software program that provides an interface to the World Wide Web or Internet. The browser enables an Internet user to navigate the Internet and establish a connection to various Internet sites and view the web page(s) provided at the various Internet sites by content providers. A browser is specifically capable of calling, i.e. loading onto the Internet user's computer, an ActiveX control or Plug-in via an Internet site. The browser also enables an Internet user to navigate between and among Internet sites, i.e., to surf the web. The browser provides a browser interface to the Internet user that is formatted by the provider of the browser software program. The browser interface typically defines the layout (e.g., color, size, number and location) and functionality provided by the browser to the Internet user. The browser interface may comprise a first parent window that typically defines the general size, color, and layout of the browser interface and includes window control buttons (e.g., minimize, close, etc.). The browser interface may also comprise a second parent window (a child to the first parent window), and one or more windows dependent from the second parent (i.e., children). The second parent and its dependent windows may provide, for example, various information (e.g., advertisements, coupons, news, HTML links, etc.) and functionality (i.e., toolbars, pull-down menus, Plug-ins, applications, etc.) to the Internet user.

[0008] An ActiveX control, as used herein, refers to a tool for linking desktop applications for the Internet and is based on art recognized, Microsoft-developed specifications. A Plug-in, as used herein, refers to a type of program developed for use with Netscape browsers and that integrates with a larger application (e.g., a browser software program) to add a specific functionality or capability to that larger program. An ActiveX control and a Plug-in as described above and as referred to herein may be used with any Internet browser.

[0009] As used herein, the term Internet site refers to a location (i.e., node) on the Internet defined by an Internet address or URL (uniform or universal resource locator). As used herein, the term Internet web page refers to a collection of hypertext markup language (HTML) commands provided at an Internet site and that provide formatting information for the text, graphics, and functionality to create a hypertext document that may be displayed on an Internet user's computer display via a browser. For example, an Internet user enters a URL to establish a connection to an Internet site, and that Internet site provides HTML commands to the user's browser to enable display of that Internet site's web

page on the user's computer display. The browser interprets hypertext markup language (HTML) commands embedded in a web page and uses the HTML commands to format the text and graphics for that web page.

[0010] The present invention provides advantages to an Internet user, an Internet content provider (i.e., an owner of an Internet site), and to an Internet Service Provider (ISP). For an Internet user, the present invention provides a method of dynamically controlling or customizing that user's Internet browser interface. The Internet user may now customize the browser interface so that each time the user accesses the Internet using a browser, user-defined information and/or functionality (also collectively referred to herein as information) will be displayed with the browser interface. For example, the user may include bookmarks, address and phone books, personal financial information, personalized news, and various functionality such as is available via ActiveX control and Plug-ins.

[0011] In addition, if an Internet user has an account with a content provider, that user's specific account information (e.g., investment portfolio, news headlines, bookmarks, address book, etc.) may now be dynamically displayed with the browser interface by the browser. Currently, an Internet user can only access that user's specific account information while connected to the content provider's Internet site. The user must return to the content provider's site to receive updated account information. The account information is not displayed with the browser interface once user leaves that Internet site. The present invention provides a method of dynamically controlling and a dynamically controllable browser interface that enables an Internet user to display with the browser interface and continuously update information and/or functionality specific to that user.

[0012] For a content provider, the present invention ensures that an Internet user (via a browser) automatically establishes a connection to that content provider's Internet site every time that user accesses the Internet using a browser. Thus, as soon as an Internet user causes a browser to execute (by selecting a browser icon, for example), the browser automatically establishes a connection to the content provider's Internet site to load that user's customized browser interface information. The present invention may also periodically and automatically cause the user's browser to connect to the content provider's Internet site while the browser is active, i.e. while the user surfs the web. In one embodiment, the content provider may provide an Internet user with access to a program for controlling the browser interface. Once the Internet user has accessed that controlling program to customize that user's browser interface, a connection to that content provider may be automatically established by that user's browser every time that user accesses the Internet. Thus, and in contrast to currently available browsers which establish a connection to an Internet site only when the user enters a URL (or otherwise positively acts to cause a connection to be established such as, for example, by selecting a link or banner advertisement), the present invention automatically establishes a connection to the content provider when the browser is initiated, independent of any home web page selection pre-programmed into the browser, whether by the Internet user or browser vendor. Once that initial connection is established, the content provider may load user-specific information and/or functionality to the Internet user's computer for display with that user's browser interface.

[0013] In addition, the content provider can also periodically cause the browser to automatically reconnect to that content provider's Internet site to update, download new, or otherwise communicate information and/or functionality for the Internet user's browser interface. For example, if an Internet user subscribes to an email service of the content provider, email messages for that Internet user received by the content provide may be automatically communicated to the Internet user even though the user is "surfing" elsewhere. When the user's browser initially establishes a connection to the content provider's Internet site upon execution of that user's browser, the information communicated by the content provider to the Internet user includes instructions for the browser to periodically reconnect to the content provider's Internet site. Thus, regardless of the number of Internet sites the user accesses, and regardless of the particular Internet site currently accessed by a user, a connection back to the content provider's Internet site will be automatically established at intervals determined by the content provider; those reconnections being transparent to the Internet user except when the user receives a notification from the content provider (i.e., new mail has arrived). Thus, the browser interface may be dynamically controlled as the Internet user surfs the web. For an ISP, the benefits are at least as great as for a content provider.

[0014] Initially, the browser interface for an Internet user must be customized using a software program that may be provided by the content provider or ISP, or that may be available on the user's computer. The software program, referred to hereinafter as a controlling program or a program for controlling (and other variations thereof), changes the manner in which the user's browser functions. More specifically, the controlling program downloads or creates a library file on the Internet user's computer. The library file may be, for example, a Dynamic Link Library (DLL) (for a Windows operating system) that creates a shell (or plurality of shells) within the browser and within which various information and/or functionality may be loaded as an ActiveX control or Plug-in. The library file includes ActiveX control or Plug-in functionality that defines an interface object added to the browser interface in accordance with the present invention. When an Internet user activates a browser, the library file is opened and the ActiveX control or Plug-in code contained within that file is made available to the browser and incorporated into the browser interface, thus causing the interface object to be displayed with the browser interface. The library file, and consequently, the shell (or shells), remain open as long as the browser is activated, generally as long as the user is surfing the web. Thus, the information and/or functionality for customizing the browser interface and loaded in the shell remain active even as the user moves from Internet site to Internet site. When used in this context herein, the terms information and functionality refer to any information, data, and/or software-driven functionality that can be contained in or part of the library file.

[0015] The library file also causes the browser to establish a connection to the content provider's Internet site when the browser is initially activated by the user. The content provider's Internet site will load information and/or function-

ality for the interface object to the user's computer for use in the browser and for display in the browser interface. The information and/or functionality loaded by the content provider may be specific to an Internet user if, for example, that user has an account with the content provider. Alternatively, the content provider may load general information and/or functionality if, for example, the Internet user does not have an account with the content provider (i.e., is a guest).

[0016] The present invention uses an object linking and embedding (OLE) in-process server to control the information and/or functionality of a browser interface. Using an ActiveX control or a browser Plug-in (each being referred to herein as a browser interface overlay (BIO) Library) contained in a library file, virtually any information and/or functionality available with an ActiveX control or Plug-in may be added to a browser interface using the present invention. The library file (via the BIO Library) thus includes the code required to customize, i.e., add, remove and/or modify, the browser interface.

[0017] Once an Internet user has accessed the controlling program and customized the operation of that user's browser, the customized browser interface is displayed when the browser is activated. In contrast to prior art browser modification methods, the present invention provides a method and browser interface that may be dynamically controlled. Updated or changed information and/or functionality may be communicated to the browser and displayed in the browser interface as the Internet user surfs the web and while maintaining the customized information and/or functionality of the browser interface. Thus, an Internet user may automatically receive up-to-date information such as, for example, stock quotes, email, new headlines, at that user's browser interface, at any Internet site and as long as the user is surfing the web using the browser.

[0018] Other objects and features of the present invention will become apparent from the following detailed description, considered in conjunction with the accompanying drawing figures. It is to be understood, however, that the drawings are designed solely for the purpose of illustration and not as a definition of the limits of the invention, for which reference should be made to the appended claims.

BRIEF DESCRIPTION OF THE DRAWINGS

[0019] In the drawing figures, which are merely illustrative, and wherein like reference characters denote similar elements throughout the several views:

[0020] **FIG. 1** depicts a view of a prior art Internet browser interface;

[0021] **FIG. 2** depicts a view of an Internet browser interface including an interface object in the browser toolbar in accordance with an embodiment of the present invention;

[0022] **FIG. 3** depicts a view of an Internet browser interface having an interface toolbar including interface object in accordance with an embodiment of the present invention;

[0023] **FIG. 4** depicts a view of an Internet browser interface having an interface toolbar including a plurality of interface objects in accordance with an embodiment of the present invention;

[0024] **FIG. 5** is a flow diagram of a method of controlling an Internet browser interface in accordance with the present invention;

[0025] **FIGS. 6-9** are a flow diagrams of a method of controlling and displaying an Internet browser interface in accordance with various embodiments of the present invention; and

[0026] **FIG. 10** is a schematic block diagram of a computer connected to the Internet and upon which the present invention may be implemented.

DETAILED DESCRIPTION OF THE PRESENTLY PREFERRED EMBODIMENTS

[0027] The present invention is directed to a method of controlling and displaying an Internet browser interface, and to a controllable Internet browser interface. In accordance with the present invention, a browser interface may be customized using a controlling software program that may be provided by an Internet content provider, an ISP, or that may reside on an Internet user's computer. The controlling software program enables the Internet user, the content provider, or the ISP to customize and control the information and/or functionality of a user's browser and browser interface.

[0028] Referring now to the drawings in detail, **FIG. 10** is a block diagram of a computer **50** connected to the Internet **90** and upon which the present invention may be implemented. Computer **50** includes an internal bus **64** that facilitates communication of information (i.e., digital data) between and among the various devices of the computer **50** and that also facilitates communication between the computer and external devices and systems via a communication interface **68**. A processor **66** coupled to the bus **64** process information within the computer **50**. The computer **50** also includes a main memory **60** such as, for example, Random Access Memory (RAM) or other equivalent dynamic memory storage device, coupled to bus **64** for receiving and storing instructions communicated from the processor **66**. Main memory **60** may also be used to temporarily store variable or other intermediate information while the processor **66** executes instructions. Read-Only-Memory (ROM) **62** is also coupled to the bus **64** for storing static data and instructions for use by the processor **66**. Various input and output devices are provided as part of the computer **50**, including, by way of non-limiting example, a display **54** (e.g., cathode ray tube (CRT), liquid crystal display (LCD), etc.), an input device **56** such as a keyboard, and a cursor control device **58** such as a mouse, or trackball, for example. A data storage device **52** such as, for example, a magnetic disk drive and magnetic disk, a CD-ROM drive and CD-ROM, or other equivalent devices and data storage mediums, is coupled to the bus **64** for communication with the processor **66**, main memory **60**, and communication interface **68**. The storage device **52** preferably has an operating system **70** and an Internet browser software program **72** (i.e., a browser) stored thereon. As will be discussed in greater detail below, a library file **74** may also be stored on the data storage device **52**.

[0029] The computer **50** may connect to the Internet **90** via the communication interface **68** over a transmission media including, but not limited to, coaxial cable, copper wires, and fiber optical cables. Communication between the com-

puter **50** and the Internet **90** may also be via a wireless or cellular interface. The communication interface **68** facilitates two-way communication between the computer **50** and another electronic device or system, e.g., a server computer (not shown) provided by a content provider **100**, **200**.

[**0030**] An Internet user (not shown) using the computer **50** may gain access to the Internet **90** by causing the browser **72** to execute, thereby opening a communication link between the communication interface **68** of the computer **50** and an Internet site **130** of a content provider **100**, via an Internet Service Provider (ISP) **80**. The browser **72** provides, to the computer display **54**, a browser interface **20** (see, e.g., **FIG. 1**) having a layout (e.g., color, size, number, location) and functionality of windows **30** that is predetermined in the browser **72** by the browser vendor. Internet content is communicated by the content provider **100** to the computer **50** for display in a content window **32** of the browser interface **20**.

[**0031**] In accordance with an embodiment of the present invention, a first Internet content provider **100** may provide an Internet user with access to a program **120** for controlling the browser **72** and browser interface **20**. When executed by the user, the controlling program **120** downloads or creates a library file **74** such as, for example, a Dynamic Link Library (DLL), on the data storage device **52** of the Internet user's computer **50**. The library file **74** preferably includes ActiveX control or Plug-in functionality. Thereafter, when the Internet user accesses the Internet using the browser **72**, the browser **72** opens the library file **74** and preferably automatically establishes a connection to the content provider's Internet site **130**. The content provider, in response to the connection established by the browser **72**, loads information and/or functional data into a shell operating within the browser and created by the library file **74**. For example, if the user has an account with the content provider **100**, customized information and/or functionality may be loaded into the library file **74**. If the user does not have an account, more generalized (i.e., guest) information and/or functionality may be loaded.

[**0032**] The library file **74** essentially opens a shell (or a plurality of shells) within the browser **72** that contains the ActiveX control or Plug-in code that may control, i.e., add, remove, and/or modify, the Internet browser **72** and the browser interface **20**. When loaded with the ActiveX control or Plug-in, the library file **74** preferably contains functions, objects, data, and other software, referred to generally herein as information, that may be used to control the browser **74** and browser interface **20**. The present invention ensures that the library file **74** (and shell) does not close when the Internet user moves from Internet site **130** to Internet site **230**. Thus, the information and/or functionality provided via the ActiveX control or Plug-in is not lost when the Internet user disconnects from the Internet site that loaded the ActiveX control or Plug-in, and connects to another Internet site.

[**0033**] Referring next to **FIG. 1**, a prior art Internet browser interface **20** having a plurality of windows, each providing various functionality to the Internet user, is there depicted. The browser interface **20** may comprise a first parent window **30** that typically defines the general size, color, and layout of the browser interface and includes window control buttons **28** (e.g., minimize, close, etc.) for that window **30**. The browser interface **20** may also comprise a second parent window **36** (a child to the first parent window) within the first parent window **30**, and one or more child windows **38** dependent from the second parent. The second parent window **36** and child windows **38** typically define information and/or functionality that will assist an Internet user when accessing and navigating the Internet. For example, the second parent **36** and its dependent windows **38** may provide toolbars, pull-down menus, Plug-ins, applications, etc.

[**0034**] For example, three windows **38** provided at the top (in the drawing) of the interface **20** define three toolbars **22**, which may include a variety of interface controls **24** such as, for example, pull-down menus, functional buttons (e.g., stop, back, forward, home, etc.), and a combination of functional buttons and windows (e.g., a search button and window). The uppermost toolbar **22** provides a plurality of pull-down menus **24**; the middle toolbar **22** provides a plurality of functional buttons **24**; and the lowermost toolbar **22** provides a pull-down menu and a window **26** (a URL address window). A content window **32** is also provided as part of the interface **20** within which content from an Internet content provider **100** (see, e.g., **FIG. 10**) may be displayed. The Internet user may toggle any of the lower three (in the drawing) toolbars **22** on and off using a View toolbar object **24** (pull-down menu) provided in the second toolbar **22**. However, the Internet user currently may not add, remove, or otherwise modify the browser interface **20**.

[**0035**] An Internet browser **20** configured in accordance with various embodiments of the present invention is depicted in **FIGS. 2-4**. In **FIG. 2**, the browser interface **20** includes an interface object **40** that is defined by the ActiveX control or Plug-in loaded in the library file **74** by the content provider **100**. The interface object **40** comprises a pull-down menu **44** and is displayed in the browser toolbar **22** with the interface controls (i.e., browser toolbar objects) **24** provided by the browser **72**. In **FIG. 3**, an interface object **40** comprises an interface object toolbar **42** and a pull-down menu **44** displayed as a separate window **48** within the browser interface **20**. In **FIG. 4**, an interface object **40** comprises an interface toolbar **42** including a plurality of pull-down menus **44** and a search window **46** displayed within a separate **48** within the browser interface **20**. An interface object **40**, in accordance with the various embodiments of the present invention, may comprise virtually any type of information and/or functionality available via a browser. Thus, by way of non-limiting example, an interface object **40** may comprise a pull-down menu, a toolbar and a pull-down menu, textual information (e.g., advertisements, coupons, etc.), textual and/or aural information (e.g., a textual advertisement with accompanying sound), textual, aural, and/or graphical (animated or not) information, video, video and audio, audio, etc.

[**0036**] The various embodiments of the inventive Internet browser interface **20** depicted by **FIGS. 2-4** are merely illustrative, non-limiting examples of the present invention. Variations to the depicted browser interfaces **20** may be possible in accordance with the teachings provided herein.

[**0037**] Referring next to **FIG. 5**, a method of controlling an Internet browser interface **20** is there depicted in accordance with an embodiment of the present invention, and designated generally as **500**. At step **510**, an Internet user

accesses a controlling program **120** via an Internet web site **130**, an ISP **80**, or the user's computer **50**. The controlling program **120**, when executed by an Internet user, provides that user with the ability to thereafter control that user's Internet browser interface **20**, as discussed in more detail below. The controlling program **120**, at step **520**, downloads or creates a library file **74** on the Internet user's computer **50** that includes ActiveX control or Plug-in code that define an interface object. Each time the Internet user activates the browser **72**, the library file **74** is opened and a connection is automatically established to a predetermined Internet web site **110**, one that is preferably configured to communicate (i.e., download) to the Internet user's computer **50**, ActiveX control or Plug-in code for the interface object, as indicated at steps **530** and **540**. The open library file **74** essentially provides a shell within the browser **70** within which the functionality provided by the ActiveX control or Plug-in may be added to the browser interface **20**. Neither the library file **74** nor the shell close until the browser **72** is closed. At step **550**, an interface object **40** is created that will be displayed in the browser interface **20**; the information and/or functionality of the interface object **40** is defined by the ActiveX control or Plug-in. In accordance with the various embodiments of the present invention, the interface object **40** remains displayed by the browser **72** with the browser interface **20**, as indicated at step **560**, for as long as the user continues to surf the web, i.e., as long as the browser **72** is activated. Thus, the functionality added to the browser **72** and browser interface **20** in accordance with the present invention is not lost as the Internet user surfs the web.

[**0038**] The present invention provides various embodiments for controlling the browser **72** and browser interface **20**, described generally above with reference to **FIG. 5**, each of which will now be described in detail.

[**0039**] Referring next to **FIG. 6** and with continued reference to **FIG. 10**, a description of an embodiment of a method of controlling and displaying a browser **72** and browser interface **20** in accordance with the present invention, designated generally as **600**, will now be provided. For purposes of **FIG. 6** and for the following discussion directed thereto, a library file **74** has already been downloaded or created on the Internet user's computer **50**, as discussed herein. At step **610**, an Internet user activates a browser **72** to initiate access to the Internet **90**. At step **620**, the library file **74** is opened and a connection automatically established to a predetermined content provider, as indicated at step **630**. The functionality defined by the ActiveX control or Plug-in code of the BIO Library is communicated by the content provides to the user's computer **50**, (i.e., to the library file **74**) to create an interface object **40** which may be added to the browser interface **20**. The interface object **40** is displayed with the Internet browser interface **20**, as indicated in step **640**. The functionality of the interface object **40**, as defined by the ActiveX control or Plug-in code, remains with the Internet browser interface **20** as the Internet user traverses the Internet **90**, regardless of the number or type of Internet sites the user visits, and as long as the browser **72** remains operational, i.e., as long as the Internet user is accessing the Internet **90** using the browser software program **72**. When the Internet user moves from one Internet site to another, as indicated at step **650**, the present invention determines whether the interface object **40** has survived that move, i.e., whether it is still displayed by the browser **72** in the browser interface **20**, as indicated at step **652**. If the interface object **40** is not displayed in the browser interface **20** (i.e., it has been removed from the browser interface **20** or otherwise terminated), the interface object **40** is redrawn, as indicated in step **660**. If the interface object **40** has survived a user move from one Internet site to another and remains displayed in the browser interface **20**, the present invention also determines, at step **654**, if the browser **72** is active; since the interface object **40** is only displayed in the browser interface **20** when the browser **72** is operational. If the browser **72** is not active (i.e., the user is no longer surfing the web), the interface object **40** is terminated and the library file **74** is closed, as indicated at step **670**. If the browser **72** remains active, the present invention continues, at step **652**, to ensure that the interface object **40** is displayed with the browser interface **20**. As the Internet user moves between and among Internet sites, the present invention monitors the status of the interface object **40** and ensures that it is displayed by the browser **72** with the browser interface **20** as long as the user is traversing the Internet **90**.

[**0040**] According to the embodiment depicted in **FIG. 6**, the present invention ensures that the interface object **40** is displayed by the browser **72** with the browser interface **20** when the Internet user leaves the Internet web site **130** at which the BIO Library initially was called and loaded to the user's computer **50**. For example, when the user activates the browser **72**, a connection is automatically established to a first, predetermined Internet site **130** that is maintained by a first content provider **100** and the BIO Library is loaded onto the user's computer **50**. The functionality provided by the BIO Library is then available to the browser **72** via a shell created by the library file **74**. When the Internet user connects to a second Internet site **230** maintained by a second content provider **200**, the functionality for the interface object **40** will continue to be present in the browser interface **20**. In this embodiment, the present invention prevents the browser **72** or operating system **70** of the computer **50** from disabling the functionality of the BIO Library by unloading the library file **74** when the link to the first Internet site **130** is terminated.

[**0041**] For example, when the browser **72** initially connects to the first Internet site **130**, that site **130** communicates functional information in the form of ActiveX control software code to the Internet user's computer **50** as a BIO Library, which is loaded into the library file **74**. If the library file **74** is not explicitly instructed by the operating system **70** or the browser **72** to close or unload when the connection to the first Internet site **130** is terminated, the library file **74** will remain loaded, providing the desired functionality for the interface object **40** in the browser interface **20**, even after the connection to the first Internet site **130** is closed. Keeping the library file **74** loaded while the Internet user moves between and among various Internet sites enables the loading of data, functions and objects outside of the ActiveX control (which is only communicated to the Internet user **50** by the first Internet site **130**) but inside of the library file **74**. As long as the library file **74** remains loaded, any data or objects created in the library file **74** and outside of the ActiveX control will stay loaded and continue to function in the browser interface **20**.

[**0042**] To keep the library file **74** open during surfing, after the browser **72** has connected to the first Internet site **130**, and before that connection is terminated, a global object, object A, is created in the program heap of the Internet user's

computer **50**, not the calling function heap. Thus, the global object survives the completion of the calling function. The global object may be created using the C++ new operator, or by declaring a global object in the global declarations. In either case, the global object will survive termination of the connection between the browser **72** and the first Internet site **130**.

[**0043**] A global object thus defined remains functional after the ActiveX control provided by the first Internet site **130** closes, i.e. after the initial connection to the first Internet site **130** is terminated. Once the global object has been created, an interface is created using the global object. That interface will serve to, for example, remove, replace and/or add functionality to the browser **72** and browser interface **20**. The interface may be created as part of the global object, or by the global object allocating a new interface object **40**. For example, the interface object **40** may be created by creating, for example, an interface object window **48** within a browser window **38** (see, e.g., **FIGS. 3 and 4**), and adding it to the browser interface **20** as a child window Alternatively, the browser interface **20** may be directly modified such as, for example, by adding or modifying a browser toolbar **22** or a browser toolbar object **24** in the browser interface **20**. Yet another alternative is to create an object interface toolbar **42** that is separate from the browser interface **20**, as depicted in **FIG. 4**.

[**0044**] Additionally, a pointer is required that is used to control the browser **72**, i.e. to instruct the browser **72** to establish a connection to a predetermined Internet site **130**, for example. That pointer is preferably stored globally so that it is accessible by any function or object in the library file **74** that sends commands to the browser **72**. In Microsoft Internet Explorer, for example, the IWebBrowser, IWebBrowser2, or IWebBrowserApp object linking and embedding (OLE) interface commands may be used to create the pointer. Using Microsoft Foundation Class (MFC), for example, the pointer may be created using the GetClientSite member of the COleControl class to retrieve a pointer from the first Internet site **130**, i.e., the Internet site which loaded the BIO Library. The GetClientSite serves as the entry point for the browser **72** to communicate with the BIO Library. A GetContainer member of the IOleClientSite class returned by the previous step may be used to get a pointer to a container for the BIO Library. The BIO Library's container is a container within which an ActiveX control is loaded. An Internet browser interface **20** generally consists of several parts, including the browser toolbars **22** and the content window **32**. A document object is created by the browser **72** for every web page an Internet user accesses and contains all of the data that appears in a particular web page. The document object is also the container for the BIO Library. Thus, a document object may also be referred to as a BIO Library's container.

[**0045**] A QueryInterface member of the IOleContainer class returned by the previous step may be used to get a pointer to the IServiceProvider interface, which may be used to locate any of the other interfaces that are presented by the browser **72**. Finally, a QueryService member of the IServiceProvider class returned by the previous step may be used to get a pointer to the IWebBrowserApp, IWebBrowser, or IWebBrowser2 interface, depending on the specific interfaces provided by the browser **72** that called the BIO Library.

[**0046**] In an alternative embodiment, the present invention may be used to modify the entire browser window **30**. If the entire browser window **30** is modified, as opposed to integrating an interface object **40** into an existing browser window **38**, the entire class for the modified browser window **30** may be subclassed or, alternatively, the specific browser window **38** may be subclassed. As used herein, the term subclassing a window, also referred to as hooking a window, refers to the replacement of an original browser window message handling procedure for handling all messages sent to a window, with a user-defined window message handling procedure. For example, a window may be subclassed using the Microsoft Foundation Class (MFC) CWnd:SubclassWindow( ) function. Alternatively, a window may be subclassed using the call the SetWindowLong function (a Microsoft Windows function), with the GWL_WNDPROC argument (a Microsoft Windows constant). The pointer returned by the SetWindowLong function call may be stored to the original browser window message handling procedure for the subclassed window. This enables the BIO Library to intercept all messages passed to a window **30** or **38**, and the BIO Library may interpret commands from interface controls **24** including buttons, menus, etc., provided by the browser **72** or from interface objects **40** that have been added by the BIO Library in accordance with the present invention.

[**0047**] The user-defined window message handling procedure that the BIO Library provides and that replaces the original browser window message handling procedure is referred to herein as the BIO Procedure. Using the BIO Procedure for the browser **72**, messages (i.e., commands) intended for the browser **72** may be intercepted and modified, or replacement or new messages (e.g., message handlers for the interface object **40**) may be communicated to the browser **72** by the BIO Procedure.

[**0048**] The present invention also ensures that the interface object **40** has not been removed from the browser interface **20**. For example, some Internet browsers **72** redraw the entire browser interface **20** when an Internet user accesses a new web site. While the global object may still be functional following such Internet movement by the user, the interface object **40** will be removed from the browser interface **20** and thus, will not be displayed with the browser interface **20**. To prevent this from occurring, messages (i.e., commands) from the browser **72** to repaint the browser interface **20** may be intercepted by the BIO Procedure and the interface object **40** may be redrawn immediately after the browser interface **20** is redrawn. Alternatively, the presence of the interface object **40** in the browser interface **20** may be periodically tested and if not present in the browser interface **20**, the interface object **40** may be redrawn. Such periodic testing should preferably occur at intervals of less than approximately one second.

[**0049**] As an example of the above-described embodiment (depicted in **FIG. 6**), an ActiveX control is loaded as a BIO Library and adds menu items (and functionality) to the browser interface **20**. The present invention creates an ActiveX control that dynamically creates a new global object, object A, which creates a new menu object (i.e., an interface object **40**) with a desired functionality to be added to the browser interface **20**. The menu object **40** may be added to the browser interface **20** using, for example, the instructions: AfxGetMainWnd( )→GetMenu( )→Append-

Menu( ), where the appended menu of the browser interface **20** would include a popup menu that points to the menu object **40**. The browser interface window would then be subclassed and handle the messages for the menu object **40** handled by the BIO Procedure and the messages for the browser interface **20** being passed to the message handler for the browser **72**. When the Internet user disconnects from the first Internet site **130** (i.e., leaves the web page containing the ActiveX control), the ActiveX control will close, but the global object, i.e., object A, will remain in the program heap and continue to provide the desired functionality to the browser interface **20**.

[**0050**] Instead of subclassing the browser window within which the interface object **40** is added, object A, or one of its descendents, may retain ownership of the interface object **40**. Then, a message handler for the interface object **40** may be created. For example, an interface object **40** may be added to a browser toolbar **22** in accordance with the above-described embodiment of the present invention, except that ownership of the interface object **40** is set using the Microsoft Foundation Class SetOwner function to be object A or one of it's descendents.

[**0051**] With reference next to **FIG. 7** and continued reference to **FIG. 10**, a description of an alternate embodiment of a method of controlling and displaying a browser interface **20** in accordance with the present invention, designated generally as **700**, will now be provided. For purposes of **FIG. 7** and for the following discussion directed thereto, a library file **74** has already been created on the Internet user's computer **50**, as described herein. At step **710**, an Internet user activates a browser **72** to access the Internet **90**. At step **720**, the library file **74** is opened on the user's computer **50**, and a connection is automatically established to a predetermined Internet site **130**, as indicated at step **730**. At step **740**, the functionality defined by the ActiveX control or Plug-in code of the BIO Library is communicated by the content provider to the user's computer **50** (i.e., to the library file **74**) to create an interface object **40** which may be displayed in the browser interface **20** using a continuous loop to control the display of the interface object **40**. The interface object **40** may only be removed (i.e., its functionality terminated) upon termination of the continuous loop. The functionality of the interface object **40**, as defined by the ActiveX control or Plug-in code, remains with the Internet browser interface **20** as the Internet user traverses the Internet **90**, regardless of the number or type of Internet web sites the user visits, and as long as the browser **72** remains operational, i.e., as long as the Internet user is accessing the Internet using that browser software program. When the Internet user moves from one web site to another, as indicated at step **750**, the present invention determines whether the interface object **40** has survived that move, i.e., whether it is still displayed in the browser interface **20**, as indicated at step **752**. If the interface object **40** is not displayed by the browser **72** in the browser interface **20** (i.e., it has been removed from the browser interface **20** or otherwise terminated), the interface object **40** is redrawn, as indicated in step **760**. If the interface object **40** has survived a user move from one web site to another and remains displayed in the browser interface **20**, the present invention also determines, at step **754**, if the browser **72** is active; since the interface object **40** is only displayed by the browser **72** in the browser interface **20** when the browser **72** is operational. If the browser **72** is not active (i.e., the user is no longer surfing the web), the interface object **40** is terminated and the library file **74** is closed, as indicated at step **770**. If the browser **72** remains active, the present invention determined, at step **756**, whether the continuous loop has been terminated. If the loop has been terminated, the interface object **40** is also terminated, as indicated at step **770**. If the loop is still executing, the present invention determines whether the interface object **40** is still displayed in the browser interface **20**, as indicated at step **752**.

[**0052**] The embodiment of the present invention depicted in **FIG. 7** prevents an ActiveX control from unloading by freezing the operation of the library file **74** (within which the ActiveX control code is loaded), even if the operating system **70** or browser **72** generate an instruction to unload or terminate the library file **74**. Because the library file **74** is frozen and never finishes unloading, all of the data, functions and objects created inside of the library file **74** by the ActiveX control will continue to exist and function after the library file **74** has been instructed to unload.

[**0053**] In some operating systems **70** and/or browsers **72**, the BIO Library will be closed when the ActiveX control is no longer present at an Internet site. This can also occur when the Internet user moves from an Internet site having the ActiveX control, e.g., Internet site **130** in **FIG. 10**, to another Internet site that does not, e.g., Internet site **230** in **FIG. 10**. To enable the interface object **40** to continue to operate in the absence of the ActiveX control, the BIO Library (and the library file **74**) must be prevented from closing.

[**0054**] To accomplish this, a pointer is created that is used to control the browser **72**. That pointer is preferably stored globally so that it is accessible by any function or object in the library file **74** that may need to send commands to the browser **72**. In Microsoft Internet Explorer, for example, the IWebBrowser, IWebBrowser2, or IWebBrowserApp OLE Interface commands may be used to create the pointer. To do this using Microsoft Foundation Class, the GetClientSite member of the COleControl class (which may be used to communicate with the BIO Library) may be used to retrieve a pointer to the BIO Library's Internet site, i.e. that Internet site that provides the ActiveX control. A GetContainer member of the IOleClientSite class returned by the previous step may be used to get a pointer to the BIO Library's container. A QueryInterface member of the IOleContainer class returned by the previous step may be used to get a pointer to the IServiceProvider interface. The IServiceProvider interface is used to easily find any of the other interfaces that are presented by the browser **72**. A QueryService member of the IServiceProvider class returned by the previous step may be used to get a pointer to the IWebBrowserApp, IWebBrowser, or IWebBrowser2 interface depending on the interfaces presented by the version of the browser **72** that called the BIO Library.

[**0055**] To prevent the library file **74** from closing, its operation is halted before it is able to terminate. To freeze or halt the operation of the library file **74**, a continuous program loop may be created and executed that terminates only when the BIO Library is to be unloaded, at which time, the program loop also pumps the message que. The program loop is referred to herein as a message pump, and may be created using for example, the PeekMessage, GetMessage,

TranslateMessage and DispatchMessage commands in a loop. Exemplary C++ code to carry out the message pump is provided below:

```
while (m_Continue)
  {
    if (PeekMessage (&msg, NULL, 0, 0, PM_NOREMOVE) != 0)
    {
      GetMessage( &msg, NULL, 0, 0 );
      TranslateMessage( &msg );
      DispatchMessage( &msg );
    }
  }
```

where m_Continue is a Boolean variable that is used to instruct the loop when to stop, and PeekMessage, GetMessage, TranslateMessage, and DispatchMessage are all Windows functions. If m_Continue equals false, the loop will end, thus ending the message pump. The msg argument is a reference to a Windows MSG structure.

[0056] The way the message pump preferably operates is that it checks to see if there are any messages waiting in the message que using the PeekMessage function. If there is a message, the message pump grabs the message from the message que using the GetMessage function and translates it from a virtual-key message into a character message using the TranslateMessage function. Finally, the message pump sends the message to the original window message handling procedure that is due to receive the message using the DispatchMessage function.

[0057] The built in capabilities of an operating system **70** may be also used to construct a message pump to pump the message que. For example, a modal dialog box or message box, using a command such as the MFC command CWnd::MessageBox("my modal", MB_OK), serves this purpose well and may be used to provided the desired freezing or halting of the operation of the library file **74**.

[0058] As long as the message pump is executing a continuous loop, the ActiveX control will not terminate, even when the Internet user accesses (i.e., visits) other Internet sites.

[0059] The embodiment of the present invention depicted by **FIG. 7** performs in the same manner (e.g., subclassing, message handling, etc.) as the above-described embodiment of **FIG. 6**.

[0060] For both of the above-described embodiments (of **FIGS. 6 and 7**), it is preferable, although not necessary, to provide an exit function for the interface object **40** so that object A and all of its descendents will be closed. Possible exemplary scenarios for calling an exit function include intercepting the message to close the browser window in the BIO Procedure, or periodically looking for the browser window and, if it is not found, terminating the ActiveX control.

[0061] Referring next to **FIG. 8A**, yet another embodiment of the method of the present invention is depicted and designated generally as **800**. For purposes of **FIG. 8A** and for the following discussion directed thereto, a library file **74** has already been created on the Internet user's computer **50**, as described herein. At step **810**, an Internet user activates a browser **72** to access the Internet **90**. At step **820**, the library file **74** is opened on the user's computer **50** and a connection is automatically established to a predetermined Internet site **130** (see, e.g., **FIG. 10**), as indicated at step **830**. At step **832**, a new browser interface is created that is a duplicate of the initial browser interface provided by the browser **72**. At step **840**, a Function Window is created that represents the original browser interface within which the functionality of the Plug-in was initially loaded.

[0062] The steps for creating a Function Window in accordance with this embodiment of the present invention are depicted in **FIG. 8B** and designated generally as **840**. At step **842**, the handle for the initial browser interface window is identified. The initial browser interface window, now the Function Window, is hidden and/or disabled at step **844** so that it cannot be closed, which would cause the BIO Library to crash. At step **846**, a pointer is created that is used to control the browser **72**. Finally, a new browser interface window is created at step **848** that may be used by the Internet user to continue traversing the Internet.

[0063] With reference again to **FIG. 8A**, and beginning at step **850**, the browser interface may now be controlled by first subclassing any browser windows, or any windows used by the browser, that are to be controlled, and then adding, deleting, and/or modifying the window(s) as described in more detail below. The original browser window message handling procedure is replaced with a BIO Procedure (as defined above). At step **860**, the present invention determines whether any new browser windows have been opened, i.e., windows that may not already be subclassed or that may not have been controlled in accordance with the present invention. If new windows have been opened, the present invention determines, at step **870**, whether the interface object **40** is to be added to those new windows. If not, the invention determines whether the Internet user desires to close the browser **72**, as indicated at step **880**. If so, the invention closes, at step **890**, all browser windows, including the Function Window. If the user does not desire to close the browser **72**, as determined at step **880**, the invention returns to step **860** and again determines if new browser windows have been opened.

[0064] With continued reference to **FIGS. 8A, 8B** and **10**, the above-described embodiment of the present invention will now be discussed in more detail. When an ActiveX control is loaded by a content provider **100** via an Internet site **130**, typically in response to a browser **72** establishing a connection to that web site **130** and calling an ActiveX control, a library file **74** located on the user's computer is caused to open creating a shell within the browser **72** within which the code for the ActiveX control may be loaded. If the library file **74** that contains the ActiveX control is explicitly instructed, by the operating system **70** or the browser **72**, to unload (i.e., close) when the ActiveX control is closed (when the user terminates the connection to the Internet site **130**), any data, functions or objects that have been created outside of the ActiveX control but in the library file **74** will be destroyed when the library file is **74** unloaded. To prevent the library file **74** from unloading, the browser **72** is prevented from closing the ActiveX control until instructed. If the ActiveX control is never instructed to close, the library file **74** is never unloaded.

[0065] A preferred method of accomplishing this is to hide and/or disable the initial browser interface window that

loaded the ActiveX control and to create a new copy of that same window within which the Internet user may continue to work and traverse the Internet. Because the initial browser interface is preferably hidden and/or disabled, the ActiveX control cannot be closed until the library file **74** shows, enables or closes the initial browser interface window, i.e. the window that loaded the library file **74**.

[**0066**] The above-described method of **FIG. 8A** preferably loads the BIO Library as a standard ActiveX control in a browser **74**, using, for example, the <Object> tag typically contained in a web page **130** or as a Band Object, and as described in the Microsoft Internet Explorer 4.x Software Development Kit. This instructs the browser **72** to initialize and run the library file **74** that contains the code for BIO Library.

[**0067**] The first time the BIO Library is initialized and called, a Function Window is created that keeps the BIO Library open by keeping a session with the ActiveX control itself open while the Internet user visits other Internet web sites **210**, i.e., other web pages. The Function Window also makes it possible for browser windows that do not have a copy of the BIO Library open to access the OLE interfaces to the browser **72**.

[**0068**] To create the Function Window, the initial browser interface window (i.e., that window which loaded the BIO Library) is preferably hidden and/or disabled. This may be accomplished by identifying the handle of the initial browser interface window, beginning with the handle of the BIO Library. To retrieve the initial browser interface window handle from the handle of the BIO Library, the GetParent function (a Windows Function) is continuously called until the present value for that function call represents one level below the desktop window. For example, a statement such as "m_Handle=GetParent(m_Handle)" executed in a loop may provide the desired functionality and result, where the value of m_Handle is initially equal to the value for the handle of the BIO Library, and will eventually return the handle to the initial browser interface window.

[**0069**] The next step is to hide and/or disable the initial browser interface window, now referred to as the Function Window, so that the Internet user cannot close the Function Window (by closing the browser **72**, for example), thereby causing the BIO Library to unload and removing the functionality provided by the BIO Library from the browser interface **20**. To hide the initial browser interface window from the user and/or disable that browser window from user-driven events, WM_SHOWWINDOW and/or WM_ENABLE messages (both Windows constants) may be sent to the initial browser interface window with values to hide and/or disable the browser window. For example, the PostMessage or SendMessage function (existing Windows functions) may be used to send a message to the initial browser interface window with the browser window handle. Alternatively, the ShowWindow and EnableWindow functions (existing Windows functions) may be used to achieve the same result.

[**0070**] A pointer is created to control the browser **72**. This pointer is preferably stored globally so that it is accessible by any function or object in the library file **74** that sends commands to the browser **72**. In Microsoft Internet Explorer for example, the IWebBrowser, IWebBrowser2, or IWebBrowserApp OLE interface may be used to create the pointer. To do this using Microsoft Foundation Class for example, the GetClientSite member of the COlecontrol class that serves as the entry point for the browser **72** may be used to communicate with the BIO Library, and to retrieve a pointer to the BIO Library's Internet site, i.e., that Internet site **130** that loaded the ActiveX control. A GetContainer member of the IOleClientSite class returned by the previous step may be used to get a pointer to the BIO Library's container. A QueryInterface member of the IOleContainer class returned by the previous step may be used to get a pointer to the IServiceProvider interface; with the IServiceProvider interface preferably being used to find any of the other interfaces that are presented by the browser **72**. A QueryService member of the IServiceProvider class by in the previous step may be used to get a pointer to the IWebBrowserApp, IWebBrowser, or IWebBrowser2 interface depending on the interfaces presented by the version of the browser **72** that called the BIO Library.

[**0071**] Finally, a new browser window is created that the Internet user may use to continue surfing the web, i.e., to continue accessing various different Internet sites, since the browser window previously used to create the Function Window has been hidden and/or disabled. Preferably, any of the IWebBrowser, IWebBrowser2, or IWebBrowserApp OLE interface is used to create a new browser window, for example, using the Navigate or Navigate2 members of that OLE interface. Alternatively, a WM_COMMAND message that corresponds to any command the browser **72** might use to open a new browser window such as a New Window command or Open In New Window command, etc., may be sent to the browser **72**. A new window may also be opened using the Dynamic Data Exchange (DDE) support provided by the browser **72**.

[**0072**] The BIO Library must now add/delete/modify, i.e., control, various browser interface features and functionality. The first step is to subclass any of the browser windows or any of the windows the browser uses (i.e., children) that are to be controlled in accordance with the present invention. A BIO window message handling procedure is used to replace the original window message handling procedure, and is hereinafter referred to as the BIO Procedure.

[**0073**] Once the browser window, or any of it's children, have been subclassed, it is possible to add menus to a subclass by retrieving a pointer to the browser window menu using the GetMenu function. Once the pointer to the menu's handle is obtained, the menu functions such as ModifyMenu, AppendMenu, InsertMenu, etc., may be used to add any desired menus to the browser window. Any commands assigned to a menu must be handled by the BIO Procedure used to subclass the BIO window. The same command identifier must not be used in creating a menu as any that are included in the browser.

[**0074**] An interface object toolbar **42** may be added to the browser interface **20** by retrieving the handle of the window to which the toolbar **42** is to be added to (hereinafter referred to as the Frame Handle) using standard Windows functions. Typically, the window will be the BIO window or a frame window that is a child of the BIO window. A window is then created using the Frame Handle as its parent. For example, to add a dialog bar (which is a form of a toolbar) as an interface object **40**, an object derived from or of a type CDialogBar (a Microsoft Foundation Class) is created and

it's Create method called using Frame Handle. If resources such as, for example, images, toolbars, dialogs, etc., are being used and the browser **72** does not share the same resources as the BIO Library, the browser's resources are temporarily replaced with the BIO Library resources before any data may be loaded from the BIO Library resource. The BIO Library resources may then be replaced with the browser's original resources.

[**0075**] As new browser windows are opened, it may be desirable to add interface object(s) **40** to those new windows. A timer may be created using SetTimer Windows function that would call a user-defined function and that function would use the FindWindowEx function (a Windows function) to check every child of the desktop window for a window with the same class name as the Function Window. For those browser windows that have not already been modified, i.e., that do not have the interface object **40**, the necessary handles may be retrieved and the same changes made as were made for the original BIO Window.

[**0076**] Finally, when the Internet user desires to close the browser **72**, it must be determined if all of the browser windows are closed, except the Function Window, and the Function Window must also be closed if all other browser windows are closed. This may be accomplished by listening for a WM_CLOSE message (a Windows constant) in the BIO message handling procedure or by setting a timer that periodically determines how many browser windows are open. To close the original Function Window, a WM_CLOSE message may be sent to that window.

[**0077**] Referring next to **FIG. 9**, another alternative embodiment of a method of controlling and displaying an Internet browser interface **20** in accordance with the present invention is depicted and generally designated as **900**.

[**0078**] Steps **910**, **920**, and **930** are essentially the same as described above for the embodiments of **FIGS. 6-8**. At step **940**, a new browser interface window is created and the initial browser interface window is hidden and/or disabled, and referred to as a Function Window. The Plug-in identifies the handle for the initial browser interface window, hides and/or disables that window, and creates a new browser interface window that may be used by the Internet user. At step **950**, all the browser windows are subclassed, and then the browser interface may be controlled, as indicated at step **960**, for all open windows. At step **962**, the present invention determines if any new browser windows have been opened, in which case the invention returns to step **960**. In no new browser interface windows have been opened, step **962** proceeds to step **964** to determine if the Internet user desires to close the browser. All windows must be closed prior to closing the Function Window, and that is determined at step **966**. If all windows are closed, the Function Window is closed, as indicated at step **970**. Otherwise, step **966** returns to step **964**.

[**0079**] In yet another alternative embodiment of the present invention, the present invention provides a method of controlling an Internet browser interface using a browser Plug-in to control (i.e., add, remove and/or modify) the functionality of the calling browser **72** and to retain the Plug-in functionality after the user leaves the Internet site **130** that loaded the Plug-in.

[**0080**] When a browser Plug-in is loaded to an Internet user's computer **50** in response to a browser **72** establishing a connection to an Internet site **130** and calling the Plug-in, a library file **74** establishes a shell within the browser **72** and within which the code for the Plug-in may be loaded. If the library file **74** is explicitly instructed by the operating system **70** or the browser **72** to unload when the Plug-in is closed, any data, functions or objects that have been created outside of the Plug-in but in the library file **74**, will be destroyed when the library file **74** is unloaded. To prevent the library file **74** from unloading, the browser **72** is prevented from closing the Plug-in until the browser **72** receives an instruction to close the Plug-in. If the Plug-in is never instructed to close, the library file **74** also is never instructed to unload. This may be accomplished by hiding and/or disabling the initial browser window that loaded the Plug-in and by creating a new copy of that same window for the Internet user to continue to use to access and traverse the Internet. Because the initial browser window is preferably hidden and/or disabled, the Plug-in can not be closed until the library file **74** chooses to show, enable or close the initial browser window that loaded the Plug-in.

[**0081**] For example, a browser Plug-in is loaded as a standard Plug-in in a browser **72**, preferably by using the <Embed> tag in a web page **110** (see e.g., **FIG. 10**), which instructs the browser **72** to initialize and load the library file **74** that contains the code for the Plug-in (i.e., the BIO Library).

[**0082**] The first time the BIO Library is initialized and called, a Function Window is created by hiding and/or disabling the original browser window, thus preventing the BIO Library from unloading by keeping a session with the Plug-in itself open. The Function Window also makes it possible for browser windows that do not have a copy of the BIO Library open to access built-in Application Programming Interfaces (APIs) for Plug-ins (i.e., functionality made available to the Internet user through the browser interface **20** and via the Plug-in functionality), such as those provided with Netscape Navigator and Microsoft Internet Explorer.

[**0083**] A Function Window is preferably created by disabling or hiding the initial browser window (in which the Plug-in resides) the first time the Plug-in is called by the browser **72**. To do this the Plug-in must first identify the handle of the initial browser window. A window member of the NPWindow structure is passed to the BIO Library from the browser **72** as a second argument to the NPP_SetWindow Function and is the handle to the Plug-in window (NPWindow and NPP_SetWindow are part of the Netscape and Internet Explorer API for Plug-Ins). To retrieve the initial browser window handle from this window member, the GetParent function (a Windows function) is continuously called until the present value for that function call represents one level below the desktop window. For example, a statement such as "m_Handle=GetParent(m_Handle)" executed in a loop may provide the desired functionality and result, where the value of m_Handle is initially equal to the value for the handle of the NPWindow structure, and will eventually return the handle for the initial browser window.

[**0084**] The initial browser window is then hidden and/or disabled so that the Internet user cannot close the Function Window and cause the BIO Library to crash. To hide the initial browser window from the user and/or disable that window from user-driven events, WM_SHOWWINDOW and/or WM_ENABLE messages (both Windows constants)

may be sent to the initial browser window with values to hide and/or disable that browser window. This can be accomplished by, for example, using the PostMessage or SendMessage function (Windows functions) to send a message to the initial browser window using the browser window handle. Alternatively, the ShowWindow and EnableWindow functions (Windows functions) may be used to achieve the same results.

[0085] The final step is to create a new browser window that the Internet user can use to continue surfing the web after the initial browser window has been hidden and/or disabled. This may be accomplished, for example, by calling any of the following Netscape and Internet Explorer Plug-in API functions: NPN_GetURL, NPN_PostURL, NPN_GetURLNotify, NPN_PostURLNotify, with the target parameter set to _new, _blank, or any window name that does not already exist. The NPP argument of the above functions is the NPP structure that was provided by the browser **72** to the Plug-in for the Function Window. Another way of doing this is to send a WM_COMMAND message to the browser **72** that corresponds to any command the browser **72** might use to open a new window such as a New Window command or Open In New Window command, for example. A new window may also be opened using the Dynamic Data Exchange (DDE) Support provided by the browser. NPN_GetURL, NPN_PostURL, NPN_GetURL-Notify, NPN_PostURLNotify and the NPP structure are part of the Netscape and Internet Explorer API for Plug-Ins and the WM_COMMAND is a Windows constant.

[0086] The BIO Plug-in may now control, i.e., add/delete/modify, features and functionality of the browser **72**. The first step is to subclass any of the browser windows or any of the windows the browser uses (collectively, BIO windows) that are to be controlled in accordance with the present invention.

[0087] After the browser window or any of it's children has been subclassed, menus may be added to the browser interface **20** by retrieving a pointer to the browser window menu using the GetMenu function (a Windows function). Once the pointer to the menu's handle is obtained, the menu functions such as ModifyMenu, AppendMenu, InsertMenu, etc. (Windows functions), may be used to add any desired menus to the browser window. Any commands assigned to a menu must be handled by the BIO message handling procedure used to subclass the BIO window, taking care not to use the same command identifier in creating a menu as any included in the browser **72**.

[0088] Alternatively or additionally, an interface object toolbar **42** may be added to the browser interface **20** by retrieving the handle of the window to which the toolbar **42** is to be added (hereinafter referred to as the Frame Handle) using standard windows functions—typically the window will be the BIO window or a frame window that is a child of the BIO window. A window is then created using the Frame Handle as its parent. For example, to add a dialog bar (which is a form of a toolbar) as an interface object **40**, an object derived from or of type CDialogBar (a Microsoft Foundation Class) may be created and it's Create method called using the Frame Handle. If resources such as, for example, images, toolbars, dialogs, etc., are being used and the browser **72** does not share the same resources as the BIO Library, the browser's resources are temporarily replaced with the BIO Library resources before any data from the BIO Library resource may be loaded. The BIO Library resources may then be replaced with the browser's original resources.

[0089] As new browser windows are opened, the interface object **40** may be added to those new windows. This may be accomplished by creating a timer using SetTimer (a Windows function) that would call a user-defined function that would use the FindWindowEx function (a Windows function) to check every child of the desktop window for a window with the same class name as the Function Window. For those new windows that do not already have the modified interface, i.e., that do not include the interface object **40**, the necessary handles are retrieved and the same changes made to those windows as were made to the original BIO window.

[0090] Finally, when the Internet user wishes to close the browser **72**, it must be determined if all of the browser windows are closed except the Function Window, and if they are, the Function Window may be closed. This may be accomplished, for example, by listening for a WM_CLOSE message (a Windows constant) in the BIO window message handling procedure or by setting a timer that periodically checks the number of open browser windows. The original Function Window may be closed by sending it a WM_CLOSE message.

[0091] In accordance with the present invention, a BIO Library (i.e., a Plug-in) may be loaded and its functionality provided in the browser interface **20**, automatically, i.e., without requiring the user to positively access a particular Internet site, i.e., to surf to a web page that calls the Plug-in. For example, Netscape has a key in its windows registry identified as Automation Startup. Upon activation, Netscape loads all of the OLE controls that are listed in the Automation Startup key. By placing a reference or a call to the library file **74** (and thus to BIO Library and Plug-in that defines an interface object **40**) in the Automation Startup key, the library file may be loaded every time a user activates a Netscape browser. Included in that library file **74** may be instructions to create an instance of the interface object **40** in the browser interface **20** and an instruction for the browser **72** to establish a connection to a predetermined Internet site **130**. Using this technique, a user does not have to choose to visit a specific Internet site **130** to load a BIO Library. The library file **74** needs to be kept open at least until the Plug-in may be loaded in the browser **72** for display and access via the browser interface **20**. One way to do this is to increment a reference counter associated with the library file **74** so that when Netscape unload the OLE controls listed in the Automation Startup key, the library file **74** will not be unloaded because it has a higher reference number.

[0092] The library file **74** may be loaded as a Plug-in using DDE to periodically look for a Netscape DDE Server using a timer or a loop. When a return is received by the browser **72** from the Netscape DDE server, Netscape is ready to receive commands and may be loaded with the Plug-in. DDE may then be used to send a command, such as WWW_OPENURL, to the browser **72**, which will cause the Plug-in to load as discussed herein.

[0093] Another method for hiding the Netscape Plug-in window that is used for BIO Library is to remove it from the task bar (i.e., where the Windows "Start" button is located)

and place it off of the visible screen. One way to remove it from the Task Bar is to call SetWindowLong and change the window style of the Plug-in window to a toolbox window. Toolbox window's do not appear in the task bar. The Netscape Plug-in window may be placed off screen by calling MoveWindow and providing coordinates that are not in the visible range for the users desktop.

[0094] The BIO window message handling procedure that is used to replace the original browser message handling procedure must know which window a message is intended to reach and what to do with a message once the BIO window message handling procedure receives that message. A preferred way to do this is to create a map that links one piece of information to another. For the present invention, a map that links window handles to structures that contain important information to that window is preferably used. For example when the BIO Library adds the interface object **40** to a new browser window, a new entry in the map is created that links the BIO window's handle to a structure that contains information useful for that BIO window. One of the pieces of information contained in the structure would preferably be the browser's original window message handling procedure for the BIO window. It is necessary to maintain the browser's original window message handling procedure so that if the BIO window message handling procedure does not know how to handle a message, it can pass the message to the browser's original window message handling procedure.

[0095] When a message is received by the BIO window message handling procedure, the first argument that is passed to the procedure is the handle of the window that received the message. To retrieve the structure that contains all of the data specific to that window, a lookup in the map is performed using the window handle as a key. The returned structure will contain all of the stored window specific information, such as the original window message handling procedure.

[0096] When controlling the browser interface **20**, i.e., adding to, removing from or modifying the browser interface, the present invention changes how the browser **72** works. Almost anything an Internet user can do with a browser works by sending a message to a browser's window or child window. Objects or windows that send messages include the menus, buttons, combo boxes and almost anything else with which the Internet user can directly interact, i.e., interface controls. Messages for example can be broken up into four components: 1) the handle of the window intended to receive the message; 2) the msg value of the message; 3) a wParam, whose use is usually dependent on the msg value; and 4) an lParam, whose value is also usually dependent on the value of the msg value.

[0097] For example, clicking on a button in a browser's window might send a message that contains the WM_COMMAND, which is a Windows constant, msg value to a browser window's window message handling procedure. The lower two bytes of the wParam variable in that message would then be a number that is used to identify which button was pressed.

[0098] By subclassing a browser's window or child window, as described above, any messages that are sent when a user interacts with any of the interface controls may be intercepted. Once a message is intercepted, the BIO window message handling procedure can interpret it and react to it. If the functionality of the interface control is to remain the same (i.e., not added to, deleted from, or modified by the present invention), the message may be passed back to the original window message handling procedure. In this way, virtually all of the interface controls that exist in the browser **72** may be controlled. In addition, interface controls may be added to the browser interface **20** and assigned command identifiers (which are passed in the wParam). The BIO window message handling procedure can then interpret the wParam and provide the functionality of the Interface control that is to be added. In addition, functionality may be removed by simply having the inventive window procedure do nothing if it receives a command identifier associated with an interface control that is to be removed from the browser. That command may thus be prevented from passing to the browser window's original message handling procedure.

[0099] Using the various embodiment of the present invention, as discussed in detail above, an Internet user may create a browser interface **20** having user-defined interface controls. Then, by setting the parent of the window for that browser interface **20** to a window that has been subclassed, any message from the new (i.e., controlled) window will be handled in the BIO window message handling procedure. This can be used to add any interface object **40** such as a toolbar, dialogbar, floating dialog etc., to the browser interface **20**.

[0100] The following illustrative, non-limiting application examples are provided to further describe the present invention. A Plug-in or ActiveX control that stays persistent as an Internet user traverses the Internet may add an interface object **40** to the browser interface **20** that enables a user to download their "bookmarks" or "favorites" from a database located on the Internet. The interface will be added directly into the browser interface and will allow the user to visit the "bookmarks" or "favorites" links that they downloaded, using the interface object **40** provided by the Plug-in or ActiveX control. This interface object **40** will serve a similar function to the current "favorites" or "bookmarks" menu items and toolbars on existing browsers. The beneficial difference is that since the bookmarks will be downloaded from a database on the Internet, users have access to their bookmarks on any computer's browser that is capable of loading the Plug-in or ActiveX control.

[0101] The present invention may also be used to generate revenue based on placing advertising "links" included in the "favorites" or "bookmarks" on the browser interface **20** via the Plug-in or ActiveX control. Consumer targeting could be based on, for example, information stored in databases, such as name, age, sex, income, race, education and geographic location, and preferences such as favorites and bookmarks or other preferences that are stored on the database or exist on the browser **72**.

[0102] A Plug-in or ActiveX control that stays persistent as the user traverses the Internet may be used to add an interface object **40** to the browser interface **20** that permits a user to download their "address book" from of a database located on the Internet. Such an interface object **40** may be added directly into the interface of the browser interface **20** and will allow the user to send e-mail as well as retrieve stored information for contacts listed in their "address book".

[0103] The present invention may also be used to earn revenue based on placing advertising "links" included in the "address book" on an interface object **40** of the Plug-in or ActiveX control. Consumer targeting could be based for example on information stored in databases, such as name, age, sex, income, race, education and geographic location, and preferences such as favorites and bookmarks or other preferences that are stored on the database or exist on the browser.

[0104] The present invention may use a Plug-in or ActiveX control to add an edit box on the browser interface **20** that allows a user to type a search directly into the browser instead of having to visit a web page that allows the user to search.

[0105] Additionally, the Plug-in or ActiveX control that stays persistent may poll, or periodically seek—at user, web site or program selected intervals—information from a preferred web site, even though the user is surfing a different web site. As the preferred web site is polled, the preferred web site can send updated information to the interface object on the user's browser, such as near real-time notification of the receipt of mail, continuous updating of stock prices, or other time sensitive information, such as, for example, news feed headlines, sports scores for selected favorite sports teams, and the like. The preferred web site can control, if desired, the timing of the polling, so as to control the traffic at the preferred web site during peak usage periods by extending the time interval between polls.

[0106] Since the shell created by the library file, as described herein, is an environment within which applications can be run, or information displayed, any information or program can be added to the interface of the browser using the present invention. The shell is independent of the browser interface, the content of the browser, and even the content of the shell itself. In short, the shell is an adaptable piece of functionality that does not, in the extreme, even need to be visible to the user. Thus, in use, the shell can be empty and receive its contents from a web site, or the shell could get Plug-ins, or the shell could even get new library files and learn to parse new information "on the fly" as the shell receives new contents from a web site or user. Thus the present invention provides significant opportunities to direct desired information from a preferred site to the user even as the user visits other sites. Of course, the more user-specific functionality provided by a web site via the customizable interface of the present invention, the greater user loyalty that web site can engender.

[0107] Thus, while there have been shown and described and pointed out fundamental novel features of the invention as applied to preferred embodiments thereof, it will be understood that various omissions and substitutions and changes in the form and details of the disclosed invention may be made by those skilled in the art without departing from the spirit of the invention. It is the intention, therefore, to be limited only as indicated by the scope of the claims appended hereto.

What is claimed is:

1. An Internet browser interface displayable by an Internet browser, the Internet browser enabling a user to access and navigate the Internet and to receive and display one or more Web pages from one or more Internet sites, the Internet browser having a bounded user interface area containing at least one Internet browser toolbar having at least one toolbar button providing predetermined functionality, the Internet browser further having a display area for displaying Web pages, the area for displaying Web pages being a separate area from the user interface area of the browser, comprising:

software that when executed operates as a control interface object that is displayed with the Internet browser interface while the browser is activated, the interface object being displayed within bounds of the user interface area of the browser such that the interface object remains within the bounds of the user interface area of the browser as part of the user interface of the browser, said interface object making additional functionality that is not part of the Internet browser prior to display of said interface object available to the user after said display, such that once the interface object is displayed it remains displayed within the bounds of the user interface area of the browser and said additional functionality remains available to the user regardless of a subsequent Internet site to which the Internet browser is caused to navigate after said display.

2. An Internet browser interface as recited in claim 1, wherein said control interface object further comprises a link to a predetermined Internet site regardless of an Internet site to which the user has navigated via the browser.

3. An Internet browser interface as recited by claim 1, wherein said software comprises an ActiveX control.

4. An Internet browser interface as recited by claim 2 wherein said software enables the Internet browser to establish a connection to the predetermined Internet site.

5. An Internet browser interface as recited by claim 1, wherein said software enables the user to customize the interface object.

6. An Internet browser interface as recited by claim 2, wherein said interface object comprises a search term entry box through which the user can enter a search term and initiate a search at said predetermined Internet site regardless of an Internet site to which the user has navigated at the time the search is initiated.

7. An Internet browser interface as recited by claim 2 wherein said interface object comprises a button via which the user can establish a connection to an email service provided by said predetermined Internet site.

8. An Internet browser interface as recited by claim 2 wherein said interface object comprises a button via which the user can access a list of said user's favorite websites maintained by said predetermined Internet site.

9. An Internet browser interface as recited by claim 2 wherein said interface object comprises a button via which the user can access a list of user addresses maintained by said predetermined Internet site.

10. An Internet browser interface as recited by claim 1 wherein said interface object comprises a search term entry box through which the user can enter a search term and initiate a search at an Internet site regardless of which Internet site the user is connected to at the time the search is initiated.

11. An Internet browser interface as recited by claim 1 wherein said interface object comprises an advertisement directed to said user based upon information about said user.

12. An Internet browser interface as recited by claim 1 wherein said interface object comprises an advertisement.

13. An Internet browser interface as recited by claim 1 wherein said interface object comprises a button via which the user can establish a connection to an email service.

14. An Internet browser interface as recited by claim 1 wherein said interface object comprises a button via which the user can access a list of said user's favorite websites.

15. An Internet browser interface as recited by claim 1 wherein said interface object comprises a button via which the user can access a list of user addresses.

16. An Internet browser interface as recited by claim 1 wherein said software comprises a Plug-in.

17. A method for establishing an affinity between an Internet user and a predetermined Internet site, said method comprising the steps of:

(a) providing to the Internet user, via the predetermined Internet site, access to a control program that when installed causes a user customizable interface object to be created on an interface of a browser used by the Internet user to traverse the Internet, the browser having a bounded user interface area containing at least one Internet browser toolbar having at least one browser toolbar button providing predetermined functionality, the Internet

browser further having a display area for displaying Web pages, the area for displaying Web pages being a separate area from the user interface area of the browser, the program further causing a user interface element to be added to and remain within the bounded user interface area of the Internet browser as part of the user interface area of the Internet browser regardless of any subsequent Internet site to which the Internet browser is caused to navigate after being added; and

(b) enabling a function to be accessed via said interface object, said function enabling the Internet user to interact with the predetermined Internet site.

18. A method as recited by claim 17, wherein said interface object further enables the Internet user to initiate a search at the predetermined Internet site regardless of the Internet site to which the Internet user has navigated at the time the search is initiated.

19. A method as recited by claim 17, wherein the function is an email function.

20. A method as recited by claim 17, wherein the function is a favorite website list function.

21. A method as recited by claim 17, wherein the function is an address book function.

22. An Internet browser interface as recited by claim 1, wherein a predetermined Internet site maintains user-specific information for a plurality of users, including information specific to a user of the browser, and wherein all or part of said interface object is dependent upon information, specific to the user of the browser, received from the predetermined Internet site.

23. An Internet browser interface as recited by claim 3, wherein a predetermined Internet site maintains user-specific information for a plurality of users, including information specific to a user of the browser, and wherein all or part of said interface object is dependent upon information, specific to the user of the browser, received from the predetermined Internet site.

24. An Internet browser interface as recited by claim 16, wherein a predetermined Internet site maintains user-specific information for a plurality of users, including information specific to a user of the browser, and wherein all or part of said interface object is dependent upon information, specific to the user of the browser, received from the predetermined Internet site.

25. An Internet browser interface displayable by an Internet browser on a computer display and including an ActiveX control interface object that is displayed with the Internet browser interface while the browser is activated and which provides a link to a predetermined Internet site regardless of an Internet site to which the computer is connected via the browser.

26. An Internet browser interface as recited by claim 25, wherein said ActiveX control interface object causes the Internet browser to establish a connection to the predetermined Internet site.

27. An Internet browser interface as recited by claim 25, wherein said ActiveX control interface object enables an Internet user to customize the interface object.

28. An Internet browser interface as recited by claim 25, wherein said ActiveX control interface object enables an Internet user to initiate a search at the predetermined Internet site.

29. An Internet browser interface displayable by an Internet browser on a computer display and including a Plug-in interface object that is displayed with the Internet browser interface while the browser is activated and which provides a link to a predetermined Internet site regardless of an Internet site to which the computer is connected via the browser.

30. An Internet browser interface as recited by claim 29, wherein said Plug-in interface object causes the Internet browser to establish a connection to the predetermined Internet site.

31. An Internet browser interface as recited by claim 29, wherein said Plug-in interface object enables an Internet user to customize the interface object.

32. An Internet browser interface as recited by claim 29, wherein said Plug-in interface object enables an Internet user to initiate a search at the predetermined Internet site regardless of the Internet site to which the Internet user has navigated at the time the search is initiated.

33. A method for establishing an affinity between an Internet user and a predetermined Internet site, said method comprising the steps of:

(a) providing to the Internet user, via the predetermined Internet site, access to a control program that permits a user customizable interface object to be created on an interface of a browser used by the Internet user to traverse the Internet; and

(b) enabling user selected functions to be accessed via said interface object, said functions enabling the Internet user to interact with the predetermined Internet site.

34. A method as recited by claim 33, wherein said interface object enables the Internet user to initiate a search at the predetermined Internet site regardless of an Internet site to which the Internet user is connected at the time the search is initiated.

35. An Internet browser interface as recited by claim 25, wherein the predetermined Internet site maintains user-specific information for a plurality of users, including information specific to a user of the computer and browser, and

wherein all or part of said interface object is dependent upon information, specific to the user of the computer and browser, received from the predetermined Internet site.

36. An Internet browser interface as recited by claim 29, wherein the predetermined Internet site maintains user-specific information for a plurality of users, including information specific to a user of the computer and browser, and wherein all or part of said interface object is dependent upon information, specific to the user of the computer and browser, received from the predetermined Internet site.

* * * * *