(No Model.) 2 Sheets—Sheet 1.

G. H. CLARK.

MACHINE FOR MOLDING THE UPPERS OF BOOTS AND SHOES.

No. 304,502. Patented Sept. 2, 1884.

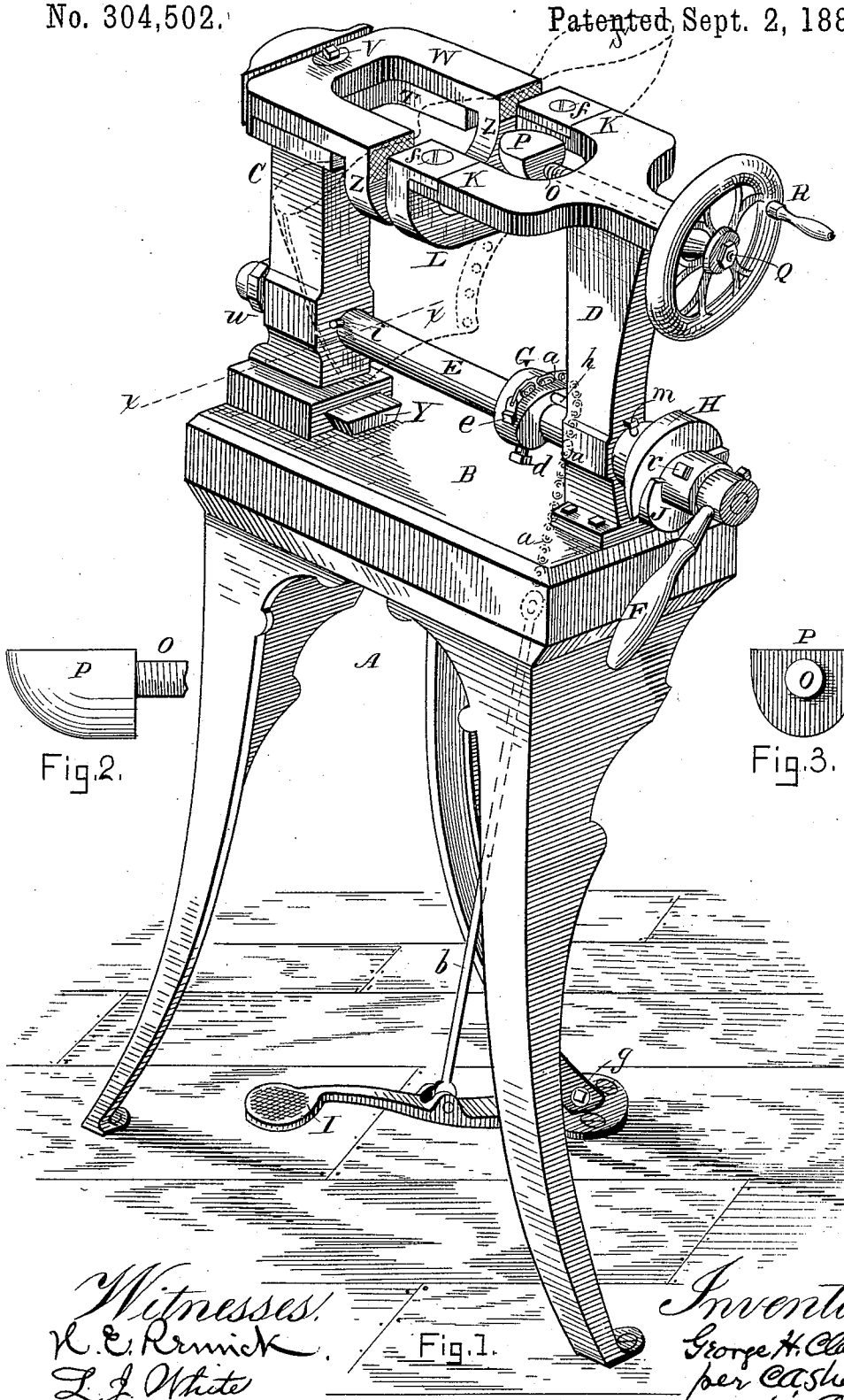

Fig. 2.

Fig. 3.

Fig. 1.

Witnesses:
R. E. Rennick.
L. J. White

Inventor:
George H. Clark,
per C. A. Shaw,
Atty.

N. PETERS. Photo-Lithographer, Washington, D. C.

(No Model.) 2 Sheets—Sheet 2.

G. H. CLARK.

MACHINE FOR MOLDING THE UPPERS OF BOOTS AND SHOES.

No. 304,502. Patented Sept. 2, 1884.

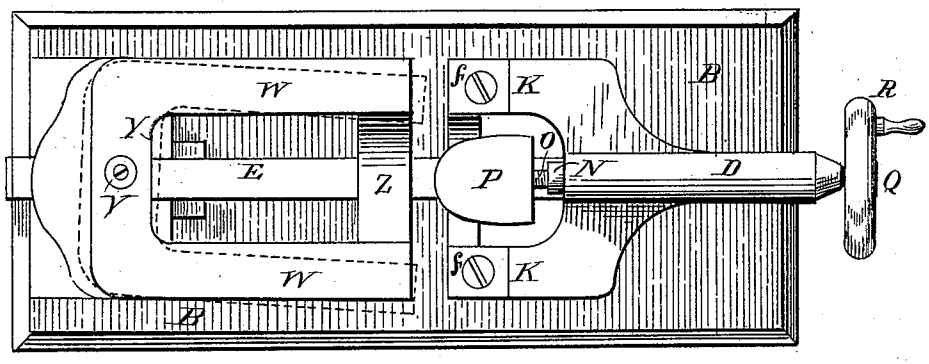

Fig. 4.

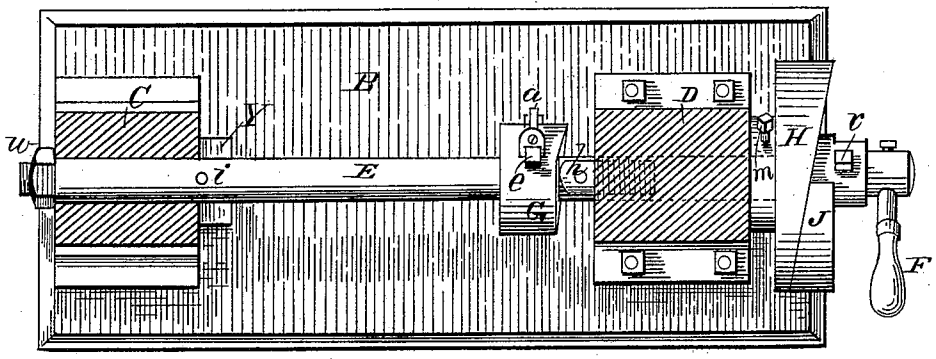

Fig. 5.

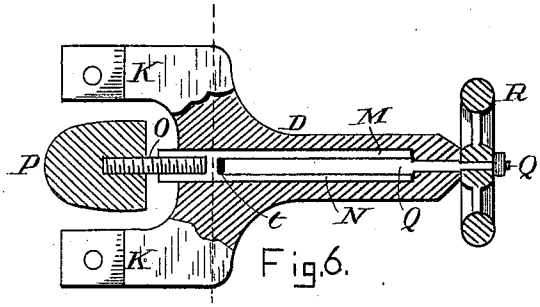

Fig. 6.

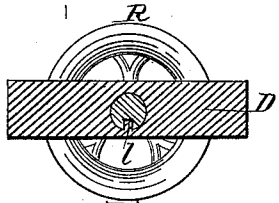

Fig. 7.

Witnesses.
N. E. Remick.
L. J. White.

Inventor.
George H. Clark,
per C. A. Shaw,
Attr.

N. PETERS. Photo-Lithographer. Washington, D. C.

UNITED STATES PATENT OFFICE.

GEORGE H. CLARK, OF BOSTON, MASSACHUSETTS, ASSIGNOR TO CHARLES ALBERT SHAW, OF SAME PLACE.

MACHINE FOR MOLDING THE UPPERS OF BOOTS AND SHOES.

SPECIFICATION forming part of Letters Patent No. 304,502, dated September 2, 1884.

Application filed July 16, 1884. (No model.)

To all whom it may concern:

Be it known that I, GEORGE H. CLARK, of Boston, in the county of Suffolk, State of Massachusetts, have invented a certain new and useful Improvement in Machines for Molding the Uppers of Boots and Shoes, of which the following is a description sufficiently full, clear, and exact to enable any person skilled in the art or science to which said invention appertains to make and use the same, reference being had to the accompanying drawings, forming a part of this specification, in which—

Figure 1 is an isometrical perspective view of my improved molding-machine; Fig. 2, a side elevation of the former or male die detached; Fig. 3, a rear elevation of the same; Fig. 4, a top plan view; Fig. 5, a plan view in section taken on line *x* of Fig. 1; Fig. 6, a plan view of the male die or former and one of the standards, a portion of the standard being represented as removed to show the slide and screw; and Fig. 7, a transverse section showing the slide in which the male die is mounted.

Like letters of reference indicate corresponding parts in the different figures of the drawings.

My invention is designed as an improvement on the mold shown and described in Letters Patent of the United States No. 293,631, dated February 19, 1884; and it consists in a novel construction and arrangement of the parts, as hereinafter more fully set forth and claimed, by which in some respects a more effective device of this character is produced than is now in ordinary use. In said patented mold the jaws of the clamp are opened and closed by means of a screw and hand-wheel, rendering the operation much slower than is desirable, and no provision is made for different sizes of uppers, or for a variation in thickness at different points in the upper. My present improvement is intended to obviate these objections, and to that end I make use of means which will be readily understood by all conversant with such matters from the following explanation:

In the drawings, A represents the stand or bench on which the machine is mounted; B, the bed-piece or body of the machine, and C D the uprights or standards. Journaled horizontally in the lower part of the standards there is a rocker-shaft, E, provided at one of its ends with the handle or lever F, and near its center, between the standards, with the adjustable cam-collet, G, which is secured to said shaft by the screw-bolt *d*. A hub (not shown) projects horizontally from the outer face of the standard D, through which the shaft E passes, and secured to this hub by the screw-bolt *m* there is an adjustable cam-collet, H, adapted to engage an adjustable cam-collet, J, which is secured to the outer end of said shaft by the screw-bolt *r*. The upper end of the standard D is bifurcated or provided with two horizontally-arranged inwardly-projecting arms, K K, which carry at their inner ends a pendent U-shaped jaw, L, rendered detachable by the screws *f*. A horizontal hole, M, is formed in the upper portion of the standard D midway between the arms K K, and fitted to work therein is a slide, N, which is splined or feathered, as shown at *l*, to prevent it from turning axially. Secured to the outer end of this slide by the screw O, there is a male die or former, P, which is nearly U-shaped both in area and cross-section, but is rounded at the point and oval on its under side, as shown in Figs. 1, 2, 3. A shaft, Q, provided with the hand-wheel R, is mounted horizontally in the standard D, the inner end of said shaft being screw-threaded and working in a correspondingly-threaded hole, *t*, in the slide N. The standard C is bifurcated or provided with two horizontally-arranged inwardly-projecting arms, T T, corresponding with the arms K K on the standard D.

Pivoted at V to the standard C there is a bifurcated or two-armed plate, W, carrying at the inner ends of its arms a pendent U-shaped jaw, Z, corresponding with the jaw L on the arms K. The standard C is fitted to move longitudinally of the machine on the slide Y, but is prevented from moving longitudinally on the shaft E by the pin *i*, which passes through said shaft where it enters said standard, and by the nut *w* on the end of said shaft. A treadle, I, is pivoted at *g* in the lower part of the stand A, said treadle being provided with

a rod, *b*, and chain *a*, the chain passing partially around the collet G from the rear toward the front, and having its upper end secured thereto at *e*. A stud, *h*, projects horizontally from the inner face of the standard D near the shaft E, said stud being adapted to engage the cam on the collect G, when the shaft is rocked or partially rotated toward the front, and thereby move the standard C outwardly on the slide Y.

The machine is designed for stretching or molding the shank portion of the upper, and in its use the shaft Q is turned back by the wheel R until the former P is between the arms K K, after which the handle F is depressed to partially rotate the shaft E toward the front, bringing the cam-face on the collet G against the stud *h*, thereby pushing the standard C outwardly on the slide Y and opening the jaws Z L. The upper S is then placed in the machine, with its top down, and the shank portion which is to be molded laid across the opening in the jaw Z, as shown in Fig. 1, after which the treadle I is depressed, causing the shaft E to rotate toward the rear, and bringing the cam-face of the collet J against the cam-face of the collet H, thereby drawing the standard C inwardly on the slide Y and causing the jaws Z L to firmly grasp one side of the upper. The shaft Q is then turned in by the wheel R, bringing the die or former P into contact with the shank portion of the upper and forcing it into the space in the jaw Z, which acts as a female die, thereby permanently molding or stretching it at that point in a manner which will be readily obvious without a more explicit description. The plate W, being pivoted at V, enables the jaw Z to swing laterally, and thereby adjust itself to the seams or any inequalities in the upper. The jaws L Z, being detachable, may also be substituted by larger or smaller jaws, as required, or in accordance with the size of the upper or work being done.

Having thus explained my invention, what I claim is—

1. In a mold for molding or stretching the uppers of boots and shoes, the following instrumentalities, to wit: two jaws adapted to grasp and clamp the upper around its shank portion, one of said jaws being also adapted to be adjusted to the inequalities of the work by the closing of the jaws onto the same, in combination with means for opening and closing said jaws, a movable die adapted to mold or stretch the unclamped portion of the upper at its shank or between said jaws, and operative mechanism for the movable die, substantially as described.

2. In a mold for molding or stretching the upper of boots and shoes, the following instrumentalities, to wit: a fixed jaw adapted to grasp and clamp the upper around its shank portion, one of said jaws being also adapted to be adjusted to the inequalities of the work by the closing of the jaws onto the same, in combination with a movable die adapted to mold or stretch the unclamped portion of the upper at its shank or between said jaws, operative mechanism for the movable die, a rocker-shaft provided with cams adapted to open and close said jaws, and means for operating said rocker-shaft, substantially as set forth.

3. In a mold for molding or stretching the uppers of boots or shoes, the pivoted jaw Z, in combination with the fixed jaw L, movable die P, means for operating said die, and means for opening and closing said jaws, substantially as described.

4. In a mold for molding or stretching the uppers of boots or shoes, the shaft E and cam-collets G H J, in combination with the fixed standard D, sliding standard C, stud *h*, and mechanism for producing rocking movements of said shaft to open and close the jaws of the mold, substantially as set forth.

5. In a mold for molding or stretching the uppers of boots or shoes, the shaft E, mounted in the standards C D, and provided with the pin *i*, nut *w*, cam-collets G J, and handle F, in combination with the cam-collet H, pin *h*, chain *a*, treadle I, and rod *b*, or means for connecting the chain and treadle, substantially as described.

6. The improved mold for molding or stretching the uppers of boots or shoes herein described, the same consisting of the bed B, provided with the slide Y, standard D, provided with the fixed jaw L, pin *h*, standard C, provided with the pivoted jaw Z, slide N, carrying the die P, and provided with the screw Q and wheel R, shaft E, provided with the pin *i*, nut *w*, cam-collets G J, and handle F, the treadle I, rod *b*, chain *a*, and cam-collet H, constructed, combined, and arranged to operate substantially as set forth.

GEORGE H. CLARK.

Witnesses:
H. E. REMICK,
L. J. WHITE.