(12) INTERNATIONAL APPLICATION PUBLISHED UNDER THE PATENT COOPERATION TREATY (PCT)

(19) World Intellectual Property Organization
International Bureau

(43) International Publication Date
10 August 2006 (10.08.2006)

PCT

(10) International Publication Number
WO 2006/083729 A1

(51) International Patent Classification:
A61B 18/14 (2006.01) *A61N 1/36* (2006.01)
A61B 17/17 (2006.01)

(21) International Application Number:
PCT/US2006/003031

(22) International Filing Date: 31 January 2006 (31.01.2006)

(25) Filing Language: English

(26) Publication Language: English

(30) Priority Data:
11/047,358 31 January 2005 (31.01.2005) US

(71) Applicant *(for all designated States except US)*: **SDGI HOLDINGS, INC.** [US/US]; 300 Delaware Avenue Suite 508, Wilmington, Delaware 19801 (US).

(72) Inventors; and

(75) Inventors/Applicants *(for US only)*: **POND, John, D.** [US/US]; 2106 Cornwall Street, Germantown, Tennessee 38138 (US). **ADCOX, William, K.** [US/US]; 164 Harbor Village Drive, Memphis, Tennessee 38103 (US).

(74) Agents: **WILLIS, Thomas, L. Jr.** et al.; MS LC340, 710 Medtronic Parkway, Minneapolis, Minnesota 55432 (US).

(81) Designated States *(unless otherwise indicated, for every kind of national protection available)*: AE, AG, AL, AM, AT, AU, AZ, BA, BB, BG, BR, BW, BY, BZ, CA, CH, CN, CO, CR, CU, CZ, DE, DK, DM, DZ, EC, EE, EG, ES, FI, GB, GD, GE, GH, GM, HR, HU, ID, IL, IN, IS, JP, KE, KG, KM, KN, KP, KR, KZ, LC, LK, LR, LS, LT, LU, LV, LY, MA, MD, MG, MK, MN, MW, MX, MZ, NA, NG, NI, NO, NZ, OM, PG, PH, PL, PT, RO, RU, SC, SD, SE, SG, SK, SL, SM, SY, TJ, TM, TN, TR, TT, TZ, UA, UG, US, UZ, VC, VN, YU, ZA, ZM, ZW.

(84) Designated States *(unless otherwise indicated, for every kind of regional protection available)*: ARIPO (BW, GH, GM, KE, LS, MW, MZ, NA, SD, SL, SZ, TZ, UG, ZM, ZW), Eurasian (AM, AZ, BY, KG, KZ, MD, RU, TJ, TM), European (AT, BE, BG, CH, CY, CZ, DE, DK, EE, ES, FI, FR, GB, GR, HU, IE, IS, IT, LT, LU, LV, MC, NL, PL, PT, RO, SE, SI, SK, TR), OAPI (BF, BJ, CF, CG, CI, CM, GA, GN, GQ, GW, ML, MR, NE, SN, TD, TG).

Declarations under Rule 4.17:
— *as to applicant's entitlement to apply for and be granted a patent (Rule 4.17(ii))*
— *as to the applicant's entitlement to claim the priority of the earlier application (Rule 4.17(iii))*

Published:
— *with international search report*

[Continued on next page]

(54) Title: ELECTRICALLY INSULATED SURGICAL NEEDLE ASSEMBLY

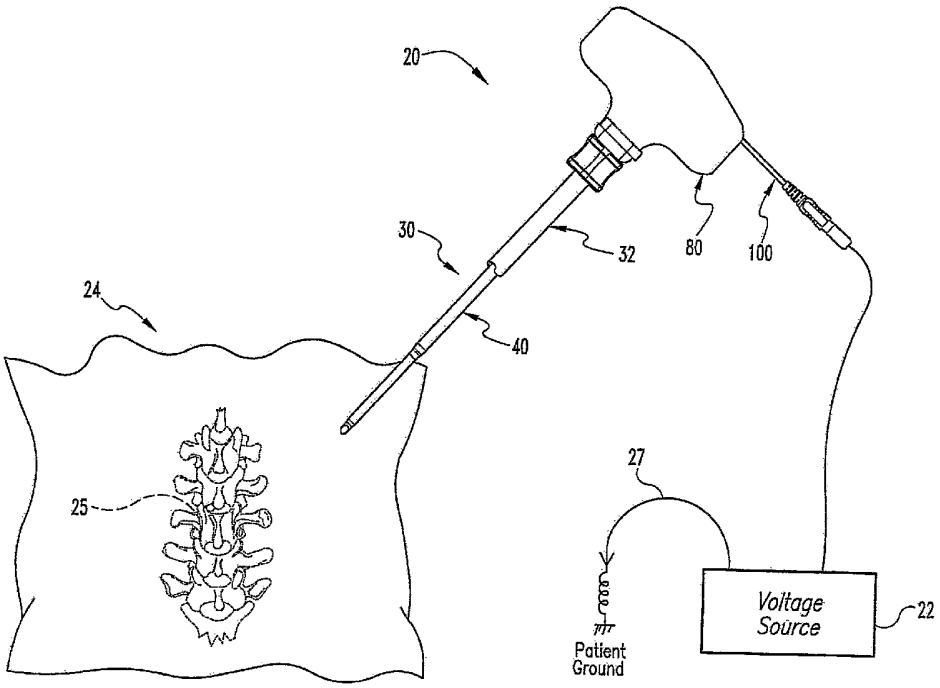

(57) Abstract: A surgical needle assembly (30) for penetrating soft and hard tissues of a patient includes a handle assembly (80) removably coupled to the needle assembly (30). The needle assembly (30) is electrically coupled to an electrical signal source. The surgical tool (20) includes an electrically conductive portion in communication with an un-insulated distal end of the needle assembly (30), and an insulated portion extending from the distal end to the handle assembly (80).

WO 2006/083729 A1

— *before the expiration of the time limit for amending the claims and to be republished in the event of receipt of amendments*

For two-letter codes and other abbreviations, refer to the "Guidance Notes on Codes and Abbreviations" appearing at the beginning of each regular issue of the PCT Gazette.

ELECTRICALLY INSULATED SURGICAL NEEDLE ASSEMBLY

BACKGROUND

Monitoring of the location of neural elements can reduce the likelihood of neural damage while accessing anatomical structures near the nerve. Systems exist which provide for delivery of an electrical current for detection of neural element proximity to a carrier of the current by visibly noting a patient's limb motor reaction when the neural element is stimulated by electrical current.

Surgical needle assemblies can be employed for access, treatment and/or delivery of treatment to locations within a patient's body. The needle assembly is inserted for penetration of soft and hard tissues of the patient during the initial steps of the treatment protocol without determining the proximity of neural elements to the needle assembly during and after such placement of the needle assembly. Subsequent treatments and procedures that are carried out based on the initial needle insertion position may impinge or interfere with the neural elements, requiring relocation of the treatment location or pathway.

SUMMARY

The present system includes a surgical tool useable by a surgeon to penetrate soft and hard tissue of the patient with a needle assembly. The needle assembly can be electrically coupled to a nerve monitoring system to allow the monitoring and detection of neural elements as the needle assembly is advanced into the patient through skin and tissue. The distal tip of the needle assembly carries the electrical signal, and the outer surface of the needle assembly is insulated to prevent shunting of the signal to tissue or instruments proximal of the distal tip. Corrective action to avoid impingement or to provide sufficient spacing from neural elements can taken during needle assembly placement, reducing the likelihood that corrective actions will need to be taken later in the surgical procedure to avoid or provide sufficient clearance with neural elements.

In one form, the needle assembly is removably engageable to a handle assembly that facilitates manipulation and control of the needle assembly as it is

advanced into the patient. In one embodiment, the handle assembly is configured to allow gripping thereof by the hand of the surgeon while maintaining the electrical lead coupling the needle assembly to the nerve monitoring system out of the way of the surgeon.

In one procedure, the surgical tool is used in minimally invasive spinal surgical procedures. The needle assembly is percutaneously advanced into the patient and engaged to the pedicle of a vertebra. During such engagement, the proximity of neural elements to the distal tip is monitored to allow for corrective action to be taken to avoid or provide sufficient spacing of the needle assembly from neural elements during this initial access phase of the procedure. In one embodiment, when the needle is engaged to the pedicle at the desired location, the handle assembly is removed from the needle assembly. The needle assembly includes a cannula housing a stylet, and the stylet is removed so that the cannula remains engaged to the pedicle. A guidewire can be positioned through the lumen of the cannula, and the cannula withdrawn. The guidewire can then guide other instruments, implants or other surgical devices or instruments to the pedicle. Other procedures are contemplated at locations along the spinal column other than the pedicles, and at other locations within the body of the patient other than the spinal column.

BRIEF DESCRIPTION OF THE FIGURES

Fig. 1 is a view of the surgical field with an assembled perspective view of a surgical tool and nerve and monitoring system.

Fig. 2 is an elevation view in partial section of the surgical tool including a needle assembly coupled to a handle assembly.

Fig. 3A is a section view along line 3A-3A of Fig. 2.

Fig. 3B is a distal end view of the handle assembly of Fig. 2.

Fig. 4 is an elevation view of a stylet comprising a portion of the needle assembly of Fig. 1.

Fig. 5A is an elevation view of a cannula comprising a portion of the needle assembly of Fig. 1.

FIG. 5B is a section view along line 5B-5B of Fig. 5A.

FIG. 6 is an elevation view of a lead comprising a portion of the surgical tool of Fig. 1.

FIG. 7 is an elevation view of a housing comprising a portion of the handle assembly.

FIG. 8 is a section view through line 8-8 of Fig. 7.

DETAILED DESCRIPTION OF THE ILLUSTRATED EMBODIMENTS

While this device is susceptible of embodiment in many different forms, there is shown in the drawings, and will herein be described in detail, several specific embodiments, with the understanding that the present disclosure can be considered as an exemplification and is not intended to be limited to the embodiments illustrated.

The present system relates to surgical tools used in accessing locations within the body of the patient while monitoring the proximity of neural elements to the tool. In one form, the surgical tool includes a needle assembly electrically engageable to a nerve monitoring system, where the needle assembly is operable to carry an electrical signal at its distal tip and allow the surgeon to monitor the proximity of neural elements with the nerve monitoring system as the needle is advanced to the target location in the patient. The proximity of the needle assembly to the neural elements can be controlled to reduce the potential neural element impact of needle insertion and subsequent procedures carried out based on the needle insertion location. The target location may include bony structures, an organ, a canal or space, a tumor or other defect, or any anatomical location or structure within a patient. The needle assembly includes a structure that facilitates operative positioning and control by the surgeon during the procedure. Once the needle has been positioned at the target location, subsequent procedures can be carried out. Such subsequent procedures can include therapy, implants, substances, or the like provided by, through or upon the needle assembly. Subsequent procedures may also include using the needle assembly as a platform or guide for subsequent placement of instruments, implants and other devices and therapeutic materials.

The needle assembly includes a distal needle structure positionable within the patient and operable to carry an electrical signal, a handle assembly, and an electrical

lead. In one embodiment, the needle structure is removably engageable to the handle assembly, although embodiments where the needle assembly is integral with the handle assembly are also contemplated. The needle assembly is operable to deliver an electrical signal, such as a current, to a location in the patient's body to monitor proximity of the neural elements to the inserted end of the needle structure. The lead can extend from the handle assembly to an electrical signal source. Another lead can be used to ground the circuit. The needle assembly, when assembled with the handle assembly, can be completely insulated, except for the distal insertion end, to prevent shunting of the electrical signal to tissue or instruments located proximally of the insertion end.

Referring to Figs. 1 and 2, there is provided view of a surgical field 24 that includes a portion of the posterior spinal column shown in hidden lines beneath the skin and tissue of a patient and surgical tool 20. Surgical field 24 includes spinal column segment 25 having a number of vertebrae therealong, it being understood that surgical tool 20 can have application in any region of the spine and in any approach to the spine. It is also understood that surgical tool 20 has application in procedures other than spinal surgical procedures.

Surgical tool 20 includes a needle assembly 30 and a handle assembly 80. Needle assembly 30 is received in a receptacle 86 extending axially into handle assembly 80. Needle assembly 30 can be electrically coupled to a nerve monitoring system 22 via lead 100 when positioned in receptacle 86. Lead 100 extends into handle assembly 80 via a lateral bore 88, where it is electrically coupled to needle assembly 30. A second reference 27 coupled to a patient (not shown) can be provided as a ground. In one procedure, the needle assembly 30 is positionable through the skin and soft and hard tissues of the patient to a surgically appropriate target location such as, for example, the pedicle of a vertebra of spinal column segment 25. Subsequent procedures and instruments for accessing the spinal column can then be employed using the needle assembly and target location obtained thereby as a minimally invasive platform for treatment and/or placement of devices and implants to treat conditions associated with the spinal column.

Needle assembly 30 includes a cannula 40 and stylet 60 removably received in a central lumen of cannula 40 along a longitudinal axis 38. Stylet 60 may include any suitable distal tip configuration, such as a trocar tip configuration as shown or a beveled tip configuration. Other embodiments contemplate a needle assembly that includes a single needle element. The needle element can be solid or cannulated. In the illustrated embodiment, handle assembly 80 is removably positioned about the proximal ends of cannula 40 and stylet 60 and engaged thereto to facilitate handling and positioning of needle assembly 30 through skin and tissue to the target location in the patient's body. An outer sheath 32 may also be provided for positioning about cannula 40 and/or stylet 60. Sheath 32 may be provided with a length extending to a distal end thereof (not shown) that extends distally beyond the distal ends of cannula 40 and/or stylet 60. Sheath 32 can facilitate pre-operative handling of needle assembly 30 to prevent, for example, accidental punctures, cutting and contamination of needle assembly 30.

Stylet 60 is shown in isolation in Fig. 4. Stylet 60 includes a pointed tip 62 adjacent its distal end and an elongate shaft 64 extending proximally from tip 62. A hub 66 is provided at the proximal end of shaft 64. Hub 66 includes an enlarged body 70 extending radially about shaft 64, and a proximal extension 68 extending proximally from body 70.

Cannula 40 is shown in Figs. 5A and 5B. Cannula 40 includes a central lumen 41 extending therealong and opening at a distal end 42 and a proximal end 53. The outer surface area of cannula 40 may be covered or coated with a non-conductive or insulative material or member to prevent shunting of electricity from cannula 40 to adjacent tissue or instruments. A distal cannula portion 44 extends proximally from distal end 42 to a transition portion 48. Transition portion 48 extends to a proximal cannula portion 46. Proximal cannula portion 46 may include a greater outside diameter than distal cannula portion 44 to provide sufficient rigidity to cannula 40 while minimizing the size of the leading end of cannula 40. Distal end 42 may also be beveled to facilitate penetration and passage of cannula 40 through skin and tissue to the target location in the patient. Other embodiments contemplate a single diameter cannula, or a cannula with more than two diameters.

The proximal end of cannula 40 includes a connection member 50. Connection member 50 may be comprised of a non-conductive material, or of a conductive material having an insulated coating. Connection member 50 includes a proximal end fitting 52 configured to facilitate attachment of various devices to cannula 40. In one embodiment, fitting 52 provides a luer-type connection. Other embodiments contemplate other connection arrangements that are provided by fitting 52. Connection member 50 may further includes a distal sleeve portion 54 extending about proximal cannula portion 46. Distal sleeve portion 54 overlaps the insulated surface area of cannula portion 46 to ensure the cannula 40 is entirely insulated adjacent its proximal end.

Connection member 50 also includes a gripping portion 56 with opposite, laterally extending wings and concave surface depressions that allow the user to grip cannula 40 to facilitate handling when handle assembly 80 is removed. Connection member 50 also includes a proximal sleeve portion 57 extending proximally from gripping portion 56. Notches 58 are provided in opposite sides of sleeve portion 57, and as discussed further below, are engageable by a locking element to secure cannula 40 to handle assembly 80. Stylet 60 is positionable in cannula 40 so that distal tip 62 projects distally of distal end 42 when hub 66 is positioned against the proximal end of connection member 50.

Referring to Fig. 6, there is shown lead 100 that extends from handle assembly 80 and is electrically engageable to stylet 60 when stylet 60 is engaged in handle assembly 80. Link 100 includes a flexible cable portion 102 extending between a connector 106 at one end and a contact 104 at the opposite end. Connector 106 and cable portion 102 can include an outer surface layer that is plastic to facilitate cleaning and protect the conductive wiring, leads and other electrical transmission structures therein. Connector 106 can be configured for electrical engagement with a lead from a nerve monitoring system or the like such as the NIM-Spine™ System marketed by Medtronic, Inc. or any other suitable nerve monitoring system.

Contact 104 is housed within handle assembly 80, and is electrically engageable to proximal extension 68 of stylet 60 when hub 60 is positioned in handle assembly 80. In the illustrated embodiment, housing 108 is positioned in the laterally

oriented bore 88 of handle 80 to secure lead 100 to handle assembly 80. Housing 108 includes a body 110 and a longitudinal trough 112 extending therealong and opening along a side of housing 108. Body 110 includes axial protrusions 114 and lateral protrusions 116 projecting into trough 112 that engage cable 102 and maintain it in position in trough 112. In particular, the opposing lateral protrusions provide restraint of cable 102 within body 110, and the axial protrusions push and facilitate frictional engagement of cable 102 against the inner surface defining bore 88. Body 110 can be engaged in bore 88 via any one or combination of a friction fit, fasteners, adhesives or welding or fusing of body 110 to handle 80.

With body 110 securely positioned in bore 88, contact 104 projects into a proximal portion 94 of receptacle 86. The proximal extension 68 of hub 60 is comprised of an electrically conductive material that contacts contact 104 in proximal portion 94 and electrically couples stylet 60 and cannula 40 to the electrical signal source.

Cannula 40 and stylet 60 may be made of stainless surgical steel or other suitable conductive material of sufficient strength to penetrate tissue of the patient to the target location. Cannula 40 and stylet 60 can be constructed from a single piece of suitable conductive material or could be constructed from more than one piece of suitable conductive material. Cannula 40 is provided with an insulated surface area between its distal and proximal ends that can be achieved through the use of a coating, e.g. polyamide coating or through other means, such as an overlaying sleeve of foam or other material. The insulated surface area ensures the electrical signal is directed to the target area adjacent the distal ends of stylet 60 and cannula 40 and is not shunted to surrounding, unintended, tissue or surgical instruments.

Handle assembly 80 is shown in Figs. 2 and 3A-3B. Handle assembly 80 comprises a handle body 82 with an electrically insulated surface area 90 and an electrically conductive area 95 internal to handle body 82. Access to electrically conductive area 95 is provided via a distally opening receptacle 86 in a distally extending neck portion 84 of handle body 82. Neck portion 84 includes a channel 96 that receives a locking element 76. A lateral bore 88 extends transversely to and opens at a lateral surface 92 of handle body 82. Lead 100 is positioned in bore 88.

Handle body 82 of handle assembly 80 includes a proximal gripping portion formed to include a major dimension 83 and a minor dimension 85. The major and minor dimensions 83, 85 are measured orthogonally to one another and orthogonally to an extension of longitudinal axis 38 through handle body 82. In one embodiment, the major dimension is at least 50% greater than the minor dimension. The provision of handle body 82 with a gripping portion having such major and minor dimensions in this manner accommodates the hand of the surgeon or other attendant, and facilitates manipulation and control of needle assembly 30 with handle assembly 80. The proximal end of body 82 includes continuously curved outer surfaces at its interface with the user's hand. This enables a user to have a secure and comfortable grasp on the handle assembly 80. Furthermore, bore 88 extends along the major dimension to position lead 100 away from the gripping surfaces of body 82. Lead 100 exits one of the lateral surfaces 92 to prevent lead 100 from interfering with gripping and control of needle assembly 30.

In another embodiment, lead 100 is engageable with an outlet or receptacle provided adjacent lateral surface 92. The outlet or receptacle is electrically coupled to needle assembly 30 in handle assembly 80.

Channel 96 in neck portion 84 opens into axially extending receptacle 86 formed in handle body 82. Receptacle 86 can include a distal portion that has the same cross-sectional size and shape as the proximal end hub 66 provided on stylet 60. In addition, the proximal end connection member 50 of cannula 40 includes a proximal sleeve portion 57 having the same size and shape as receptacle 86. The form fitting engagement between receptacle 86 and fitting 50 and hub 66 prevents rotation and provides a secure connection that eliminates movement between needle assembly 30 and handle assembly 80. In the present embodiment, receptacle 86 has an oblong shape that is asymmetric. As a result, receptacle 86 will receive the proximal end portions of stylet 60 and cannula 40 when in proper alignment with the shape of receptacle 86.

When assembled, proximal sleeve portion 57 of connection member 50 of cannula 40 occupies receptacle 86 adjacent channel 96, and notches 58 of sleeve portion 57 are aligned relative to channel 96. Cannula 40 is secured in receptacle 86

by locking element 76 in channel 96. In one embodiment, stylet 60 is press fit into receptacle 86 for engagement with handle assembly 80 so that proximal extension 68 of stylet 60 extends into a smaller proximal portion 94 of receptacle 86 and maintains a constant electrical connection with contact 104 of lead 100, thereby electrically coupling lead 100 to needle assembly 30.

In another embodiment, stylet 60 is removable from handle assembly 80 and also removable from cannula 40. In this embodiment, the electrical connection between lead 100 and stylet 60 can be maintained by any conventional means known to a person skilled in the art, such as a spring made of a conductive material. Such a spring could be mounted in bore 88 or receptacle 86, such that it makes contact with a conductive area of stylet 60 or cannula 40 when attached to handle assembly 80. The releasable connection also does not interfere with removal of handle assembly 80 from needle assembly 30 when it is desired to withdraw stylet 60 from cannula 40.

In the illustrated embodiment, channel 96 comprises a shallow channel extending circumferentially about neck portion 84, and extends approximately three-quarters of the way around neck portion 84. Channel 96 includes through-holes 97, 99, which are located opposite from one another and open into side portions of receptacle 86. Channel 96 begins at first through-hole 97, and extends counterclockwise approximately one-quarter revolution past second through-hole 99 where it terminates.

Locking element 76 can be in the form of a substantially flat, semicircular member having an aperture diameter slightly larger than the inner diameter of channel 96. Locking element 76 an outer gripping surface 78, which facilitates rotation of locking element 76 by the user. Locking element 76 is adapted to fit within channel 96 and has an outer circumference extending slightly less than three-quarters around neck portion 84.

Locking element 76 can be manipulated and rotated within channel 96 about a small angular displacement on the order of one-eighth of one rotation. This effectively allows for locking element 76 to be toggled between two positions, which correspond to the locked and unlocked configurations relative to handle assembly 80. When locking element 76 is rotated counterclockwise, no portions of locking element

76 protrude through through-holes 97 and 99, as shown in Fig. 3A, and locking element 76 does not obstruct receptacle 86. In this configuration, a groove 72 of locking element 76 is aligned with second through-hole 99, and on the other side of channel 96, the end 74 of locking element 76 is located slightly counterclockwise of second through-hole 97. This position corresponds to the unlocked orientation which allows removal and insertion of cannula 40 and hub 60 relative to handle assembly 80. Alternatively, when locking element 76 is rotated clockwise as far as possible, groove 72 is no longer aligned with through-hole 99, thereby causing a portion of locking element 76 to protrude through through-hole 99 and obstruct one side portion of passage 86. Additionally, the end 74 of locking element 76 now protrudes through the other through-hole 97, obstructing the other side portion of passage 86. This position of locking element 76 corresponds to the locked orientation which engages cannula 40 in handle assembly 80.

In order to join handle assembly 80 to cannula 40, connection member 50 is inserted through the distal opening of receptacle 86 of handle assembly 80 when locking element 76 is in the unlocked orientation. If locking element 76 is in the locked orientation, then side portions of receptacle 86 will be obstructed by locking element 76 at through-holes 97, 99, thereby preventing full insertion of cannula 40 into handle assembly 80. When proximal sleeve portion 57 is fully inserted into passage 86, enlarged gripping portion 56 will abut the distal end of neck portion 84 of handle assembly 80, and notches 58 in sleeve portion 57 will be aligned with through-holes 97, 99.

Proximal extension 68 of stylet 60 is electrically engaged with contact 104 of lead 100 in handle assembly 80. Once the proximal portion of cannula 40 has been fully inserted into receptacle 86, the user may then lock handle assembly 80 to needle assembly 30 by rotating locking element 76 clockwise relative to its Fig. 3 orientation. As locking element 76 is rotated from its unlocked position to its locked position, needle assembly 30 is fixed in place within receptacle 86. Portions of locking element 76 protrude through through-holes 97, 99 into notches 58 to secure at least cannula 40 of needle assembly 30 in position relative to handle assembly 80. The user of needle assembly 30 can use a large amount of force, if necessary, to

manipulate and penetrate needle assembly 30 through tissue and/or bone, without undesired movement of needle assembly 30 relative to handle assembly 80.

While the invention has been illustrated and described in detail in the drawings and foregoing description, the same is to be considered as illustrative and not restrictive in character, and that all changes and modifications that come within the spirit of the invention are desired to be protected.

What is claimed is:

1. A surgical tool for penetrating tissue and monitoring the proximity of neural elements, comprising:

a needle assembly extending along a longitudinal axis, said needle assembly comprising:

a stylet including an electrically conductive portion near a pointed distal end, a shaft extending proximally from said distal end providing a conductive path to a proximal extension of said stylet;

a cannula including an insulated outer surface area and a length wherein said pointed distal end of said stylet projects distally from said insulated surface area when said stylet is positioned in said cannula;

a handle assembly attachable near said proximal end of said needle assembly comprising:

an electrically insulated outer surface area;

an electrically conductive area internal to said electrically insulated surface area and engageable with said proximal extension of said stylet;

said handle assembly including a gripping portion having a major dimension at least 50% greater than a minor dimension, said major and minor dimensions being measured orthogonally to said longitudinal axis and to one another; and

an electrical lead extending from said electrically conductive area through said handle assembly along said major dimension.

2. The surgical tool of claim 1, wherein said cannula includes a distal end positioned proximally of said distal pointed end of said stylet when said stylet is positioned in said cannula.

3. The surgical tool of claim 2, wherein said cannula includes a connection member on a proximal end thereof and said stylet includes a hub about a proximal end of said stylet positonable in abutting engagement with a proximal end of said connection member of said cannula.

4. The surgical tool of claim 3, wherein said hub includes a body extending about said shaft and said proximal extension of said stylet extends proximally from said body.

5. The surgical tool of claim 3, wherein said connection member on said cannula includes a gripping portion projecting outwardly from said cannula, a first sleeve portion extending about said cannula distally of said gripping portion, and a second sleeve portion about said cannula proximally of said gripping portion.

6. The surgical tool of claim 5, wherein said second sleeve portion includes a pair of notches for receiving a locking element to couple said needle assembly to said handle assembly with said hub and said connection member are at least partially received in said handle assembly.

7. The surgical tool of claim 1, wherein said proximal extension of said stylet fits inside a receptacle within said handle assembly, said receptacle including an electrical contact for engaging said proximal extension and electrically coupling said needle assembly with said lead.

8. The surgical tool of claim 1, wherein said cannula includes a distal end beveled to facilitate movement of said cannula through tissue of the patient.

9. The surgical tool of claim 1, wherein said cannula includes a lumen having a generally constant size between distal and proximal ends of said cannula.

10. The surgical tool of claim 1, wherein said lead extends along said major dimension of said handle assembly and exits said handle assembly at a location distally of said curved surfaces to avoid interfering with the user's hand positioned about said gripping portion.

11. The surgical tool of claim 1, wherein said handle assembly includes a handle body having a bore extending along said major dimension from a lateral outer surface of said handle body to a receptacle aligned along said longitudinal axis of said needle assembly when said handle assembly is engaged thereto, said lead extending through said bore.

12. The tool of claim 11, further comprising a body positionable in said bore, said body defining trough for receiving a cable portion of said lead and securing said cable portion in said handle assembly.

13. A surgical tool for penetrating tissue and monitoring the proximity of neural elements, comprising:

a needle assembly extending along a longitudinal axis, said needle assembly comprising:

an exposed, electrically conductive portion near a distal end, said distal end being adapted for penetrating tissue;

a proximal portion;

insulated surface area extending about a conductive path between said conductive portion and said proximal portion;

a handle assembly, comprising:

an electrically insulated surface area;

an electrically conductive area internal to said electrically insulated surface area;

an opening for receiving said proximal portion of said needle assembly in electrical engagement with said electrically conductive area;

a gripping portion extending along a major dimension and a minor dimension, said minor dimension being less than said major dimension and said major and minor dimensions being measured orthogonally to said longitudinal axis and to one another; and

an electrical lead extending along said major dimension from said electrically conductive area internally of said insulated surface area to a location external of said gripping portion.

14. The surgical tool of claim 13, further comprising a locking element rotatable around said longitudinal axis of said needle assembly from a first position that retains said needle assembly in said handle assembly to a second position that allows removal of said needle assembly from said handle assembly.

15. The surgical tool of claim 13, wherein said handle assembly includes a receptacle including an electrical contact for electrically engaging said proximal portion of said needle assembly and electrically coupling said needle assembly with said lead.

16. The surgical tool of claim 13, wherein said needle assembly includes a stylet removably received in a lumen of an outer cannula, said stylet including a proximal end hub positionable in proximal abutting engagement with a proximal end connection member of said cannula when said needle assembly is received in said handle assembly.

17. The surgical tool of claim 16, wherein said electrically conductive portion includes a distal end of said stylet and said conductive path extends along a shaft of said stylet.

18. The surgical tool of claim 17, wherein cannula includes said insulated surface area about an outer surface thereof.

19. The surgical tool of claim 13, wherein said major dimension is at least 50% greater than said minor dimension.

20. The surgical tool of claim 13, wherein said gripping portion of said handle assembly includes continuously curved outer surfaces along a proximal end of said handle assembly providing an anatomical fit at interfaces with a user's hand along said major dimension.

21. The tool of claim 13, wherein said insulated surface area of said handle assembly is in an overlapping arrangement with said insulated surface area of said needle assembly.

22. A surgical method for accessing at least one vertebra of the spinal column, comprising:

inserting a needle assembly through tissue to the at least one vertebra;

delivering an electrical signal to a distal end of the needle assembly while inserting the needle assembly and insulating the needle assembly from tissue proximal of the distal end;

monitoring the proximity of neural elements to the distal end;

engaging the distal end of the needle assembly to the at least one vertebra; and

removing a handle assembly mounted to a proximal end of the needle assembly.

23. The method of claim 22, further comprising;

removing a stylet from the needle assembly while maintaining an outer cannula of the needle assembly in engagement with the vertebra.

24. The method of claim 23, further comprising:

positioning a guidewire through the cannula;

engaging the guidewire to the at least one vertebra; and

removing the outer cannula.

25. The method of claim 22, wherein the needle assembly extends along a longitudinal axis and the handle assembly includes a gripping portion having a major dimension and a minor dimension, the major dimension being at least 50% greater than the minor dimension, the major and minor dimensions being measured orthogonally to the longitudinal axis and to one another.

26. The method of claim 25, wherein an electrical lead extends through the handle assembly along said major dimension and is electrically engageable to the proximal end of the needle assembly within the handle assembly.

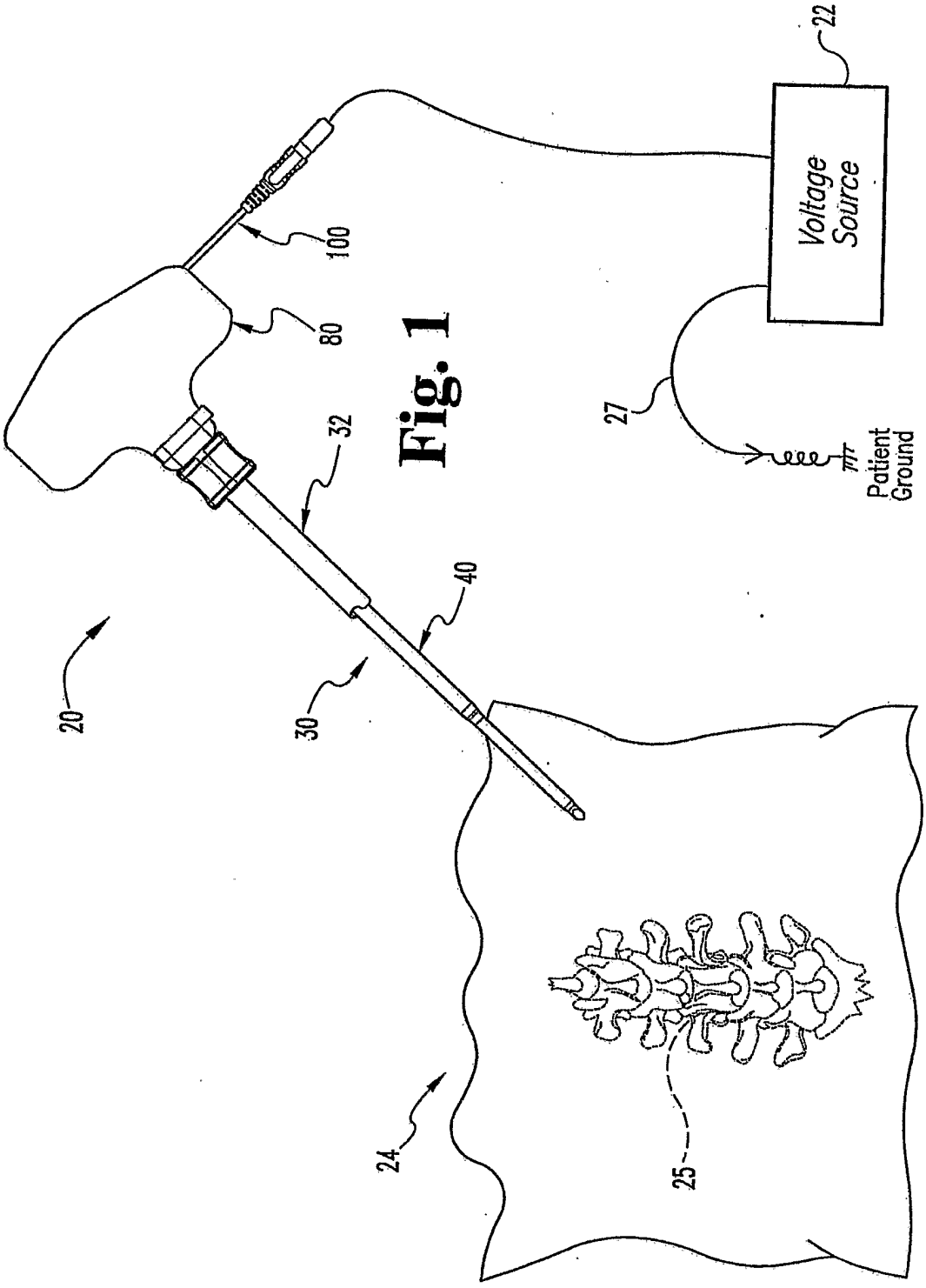

Fig. 1

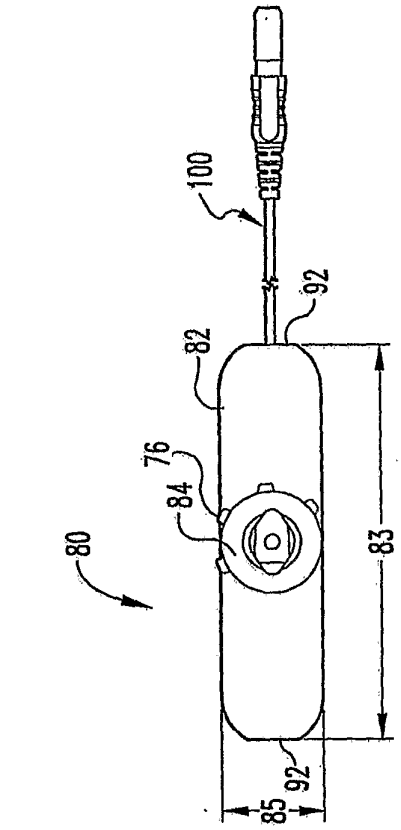

Fig. 3B

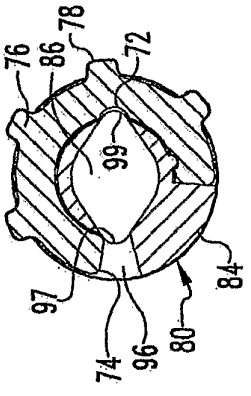

Fig. 3A

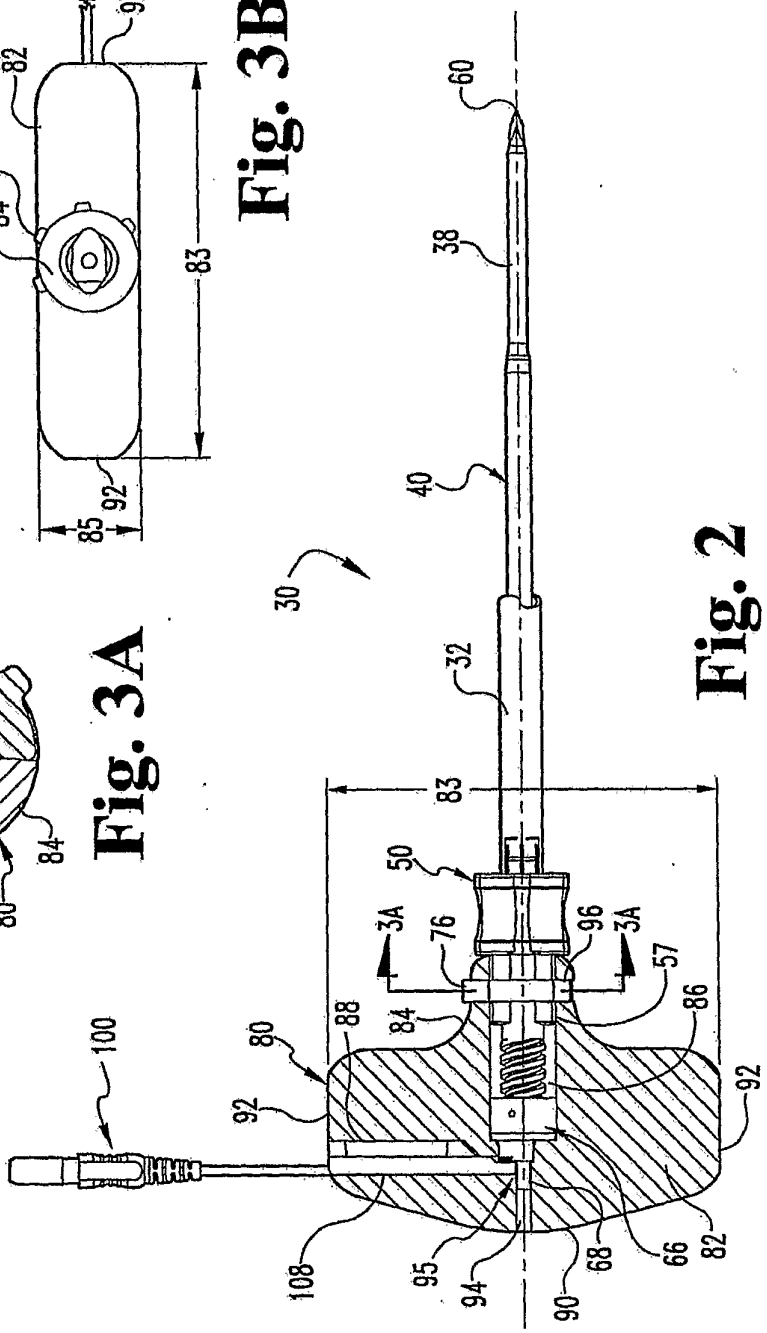

Fig. 2

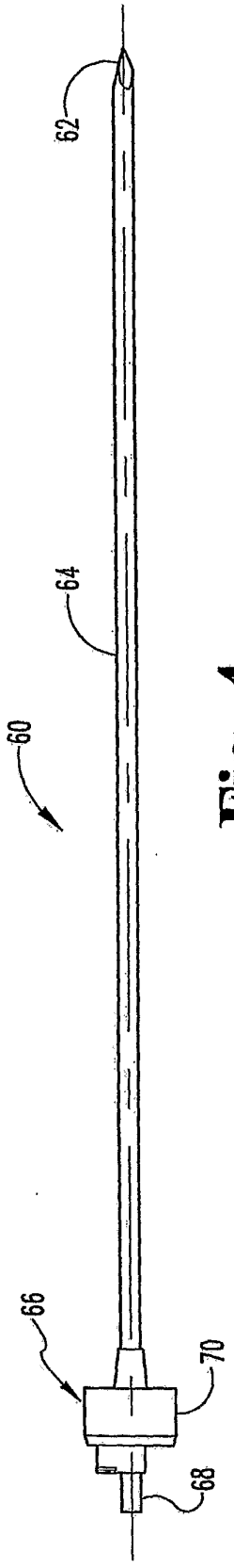

Fig. 4

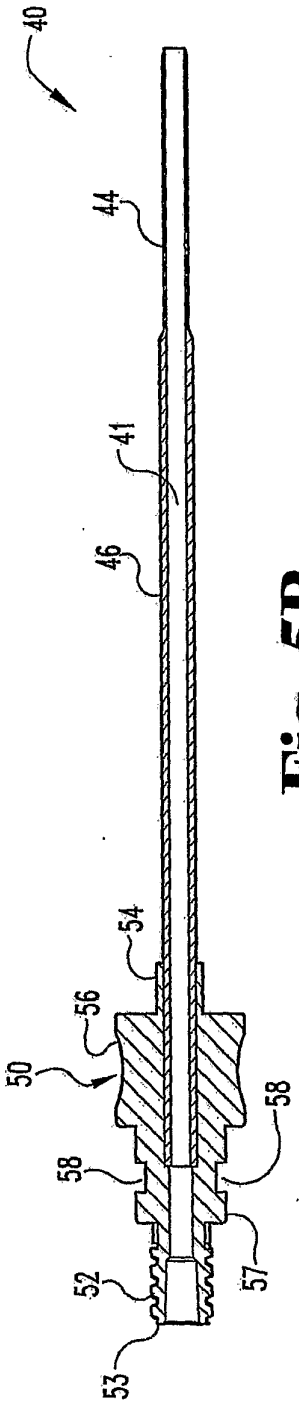

Fig. 5B

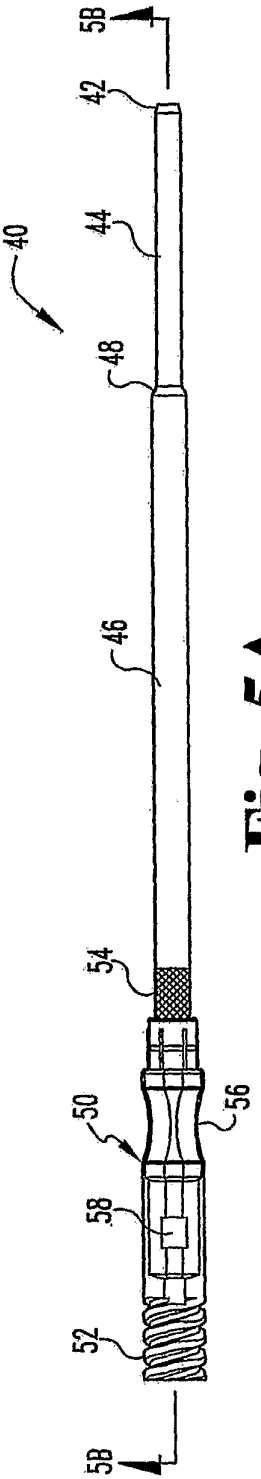

Fig. 5A

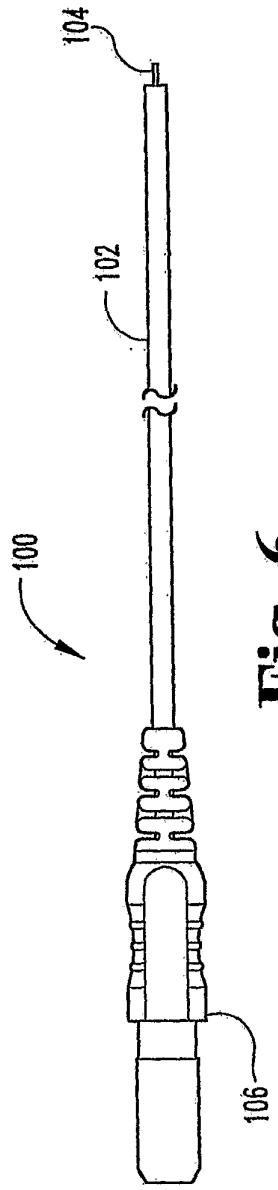

Fig. 6

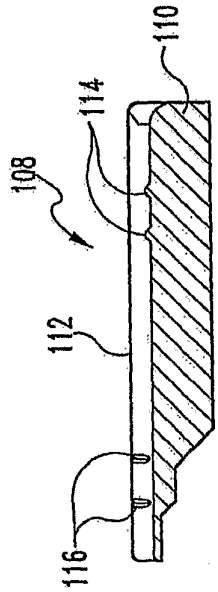

Fig. 8

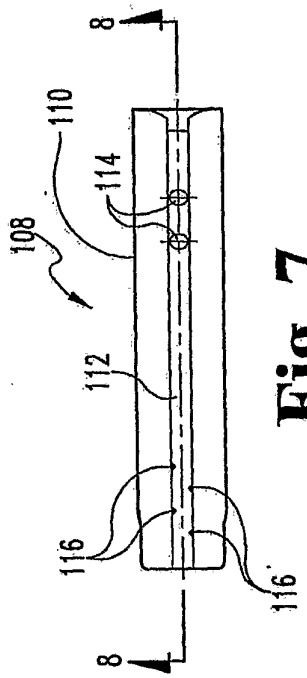

Fig. 7

INTERNATIONAL SEARCH REPORT

International application No
PCT/US2006/003031

A. CLASSIFICATION OF SUBJECT MATTER
INV. A61B18/14 A61B17/17 A61N1/36

According to International Patent Classification (IPC) or to both national classification and IPC

B. FIELDS SEARCHED

Minimum documentation searched (classification system followed by classification symbols)
A61B A61N

Documentation searched other than minimum documentation to the extent that such documents are included in the fields searched

Electronic data base consulted during the international search (name of data base and, where practical, search terms used)
EPO-Internal

C. DOCUMENTS CONSIDERED TO BE RELEVANT

Category*	Citation of document, with indication, where appropriate, of the relevant passages	Relevant to claim No.
X	US 2004/122482 A1 (TUNG JAMES ET AL) 24 June 2004 (2004-06-24) page 1, paragraph 4-10 page 3, paragraph 31 - page 4, paragraph 39 figure 2	1,2, 7-11,13, 15,19,20
Y		3-5,12, 16-18

X	WO 97/26836 A (RITA MEDICAL SYSTEMS, INC) 31 July 1997 (1997-07-31) page 1, lines 17-22 page 3, lines 4-20 page 5, line 25 - page 10, line 22 figures 1,3-6,8,9	1,2, 7-11,13, 15,19,20
A		17,18

	-/--	

[X] Further documents are listed in the continuation of Box C.

[X] See patent family annex.

* Special categories of cited documents :

"A" document defining the general state of the art which is not considered to be of particular relevance

"E" earlier document but published on or after the international filing date

"L" document which may throw doubts on priority claim(s) or which is cited to establish the publication date of another citation or other special reason (as specified)

"O" document referring to an oral disclosure, use, exhibition or other means

"P" document published prior to the international filing date but later than the priority date claimed

"T" later document published after the international filing date or priority date and not in conflict with the application but cited to understand the principle or theory underlying the invention

"X" document of particular relevance; the claimed invention cannot be considered novel or cannot be considered to involve an inventive step when the document is taken alone

"Y" document of particular relevance; the claimed invention cannot be considered to involve an inventive step when the document is combined with one or more other such documents, such combination being obvious to a person skilled in the art.

"&" document member of the same patent family

Date of the actual completion of the international search	Date of mailing of the international search report
12 June 2006	22/06/2006

Name and mailing address of the ISA/	Authorized officer
European Patent Office, P.B. 5818 Patentlaan 2 NL – 2280 HV Rijswijk Tel. (+31–70) 340–2040, Tx. 31 651 epo nl, Fax: (+31–70) 340–3016	Kakoullis, M

Form PCT/ISA/210 (second sheet) (April 2005)

INTERNATIONAL SEARCH REPORT

International application No
PCT/US2006/003031

C(Continuation). DOCUMENTS CONSIDERED TO BE RELEVANT

Category*	Citation of document, with indication, where appropriate, of the relevant passages	Relevant to claim No.
X	US 5 474 558 A (NEUBARDT ET AL) 12 December 1995 (1995-12-12) column 3, line 66 - column 8, line 42 figures 6,7A-7C	13,21
A		1
Y	US 5 433 739 A (SLUIJTER ET AL) 18 July 1995 (1995-07-18) column 9, line 59 - column 10, line 41 figures 3,5	3-5, 16-18
A		1
Y	US 6 605 085 B1 (EDWARDS STUART D) 12 August 2003 (2003-08-12) column 6, line 32 - column 8, line 16 figures 1A,1D	12
A		1
A	US 4 573 448 A (KAMBIN ET AL) 4 March 1986 (1986-03-04) column 3, lines 5-15 figures 1,2	1,3,6, 13,16
A	US 2003/028146 A1 (AVES TEODULO) 6 February 2003 (2003-02-06) column 3, paragraph 52 - column 4, paragraph 55 figure 6	1,3,5

INTERNATIONAL SEARCH REPORT

International application No.
PCT/US2006/003031

Box II Observations where certain claims were found unsearchable (Continuation of item 2 of first sheet)

This International Search Report has not been established in respect of certain claims under Article 17(2)(a) for the following reasons:

1. [X] Claims Nos.: 22-26
because they relate to subject matter not required to be searched by this Authority, namely:

Rule 39.1(iv) PCT - Method for treatment of the human or animal body by surgery

2. [ ] Claims Nos.:
because they relate to parts of the International Application that do not comply with the prescribed requirements to such an extent that no meaningful International Search can be carried out, specifically:

3. [ ] Claims Nos.:
because they are dependent claims and are not drafted in accordance with the second and third sentences of Rule 6.4(a).

Box III Observations where unity of invention is lacking (Continuation of item 3 of first sheet)

This International Searching Authority found multiple inventions in this international application, as follows:

1. [ ] As all required additional search fees were timely paid by the applicant, this International Search Report covers all searchable claims.

2. [ ] As all searchable claims could be searched without effort justifying an additional fee, this Authority did not invite payment of any additional fee.

3. [ ] As only some of the required additional search fees were timely paid by the applicant, this International Search Report covers only those claims for which fees were paid, specifically claims Nos.:

4. [ ] No required additional search fees were timely paid by the applicant. Consequently, this International Search Report is restricted to the invention first mentioned in the claims; it is covered by claims Nos.:

Remark on Protest

[ ] The additional search fees were accompanied by the applicant's protest.

[ ] No protest accompanied the payment of additional search fees.

INTERNATIONAL SEARCH REPORT

Information on patent family members

International application No
PCT/US2006/003031

Patent document cited in search report	Publication date	Patent family member(s)	Publication date
US 2004122482 A1	24-06-2004	AU 2003292933 A1	14-07-2004
		WO 2004056267 A1	08-07-2004
		EP 1581109 A1	05-10-2005
WO 9726836 A	31-07-1997	AU 1527897 A	20-08-1997
US 5474558 A	12-12-1995	NONE	
US 5433739 A	18-07-1995	US 5571147 A	05-11-1996
US 6605085 B1	12-08-2003	US 6660002 B1	09-12-2003
		US 2005033279 A1	10-02-2005
US 4573448 A	04-03-1986	NONE	
US 2003028146 A1	06-02-2003	WO 03011360 A2	13-02-2003
		US 2003028147 A1	06-02-2003