US 20070209268A1

(19) United States

(12) Patent Application Publication

(10) Pub. No.: US 2007/0209268 A1

(43) Pub. Date: Sep. 13, 2007

Birurakis et al.

(54) LASER RANGEFINDER SIGHTING APPARATUS AND METHOD

(75) Inventors: **William Birurakis**, Great Mills, MD (US); **Jay James**, Santa Barbara, CA (US); **Stephen W. McHugh**, Santa Barbara, CA (US)

Correspondence Address:
KOPPEL, PATRICK & HEYBL
555 ST. CHARLES DRIVE, SUITE 107
THOUSAND OAKS, CA 91360

(73) Assignee: **Santa Barbara Infrared, Inc.**, Santa Barbara, CA (US)

(21) Appl. No.: **11/449,483**

(22) Filed: **Jun. 7, 2006**

Related U.S. Application Data

(60) Provisional application No. 60/781,084, filed on Mar. 9, 2006.

Publication Classification

(51) **Int. Cl.**
F41G 1/38 (2006.01)
F41G 1/00 (2006.01)

(52) **U.S. Cl.** **42/119**; 42/142

(57) **ABSTRACT**

A sighting assembly comprising a housing having a first portion and a second portion has mounted within the first portion thereof a laser rangefinder comprising a laser transceiver for transmitting a laser beam toward a target and for receiving a reflected laser beam from the target. The laser rangefinder is coupled to a display for indicating the distance to the target. Mounted within the second portion of the housing is a sight for viewing the target. The sighting assembly further includes at least one attachment on the housing for securing the assembly to a weapon.

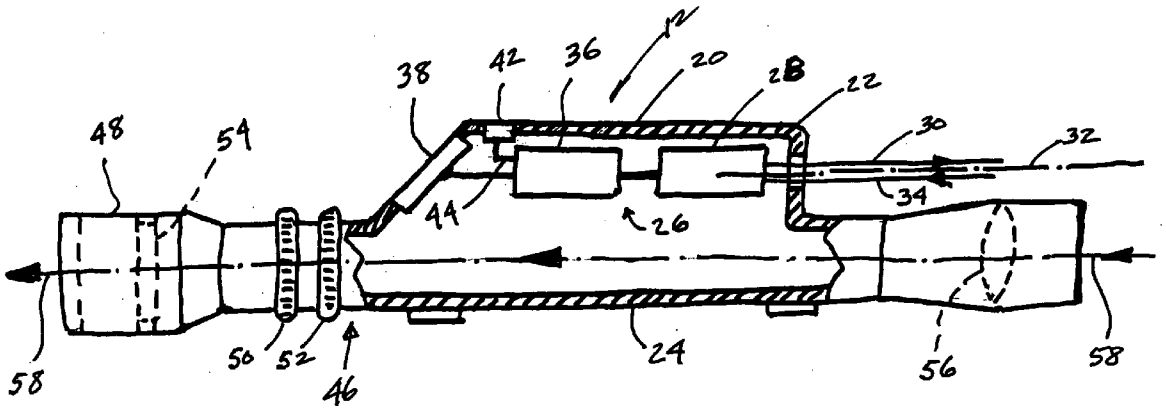

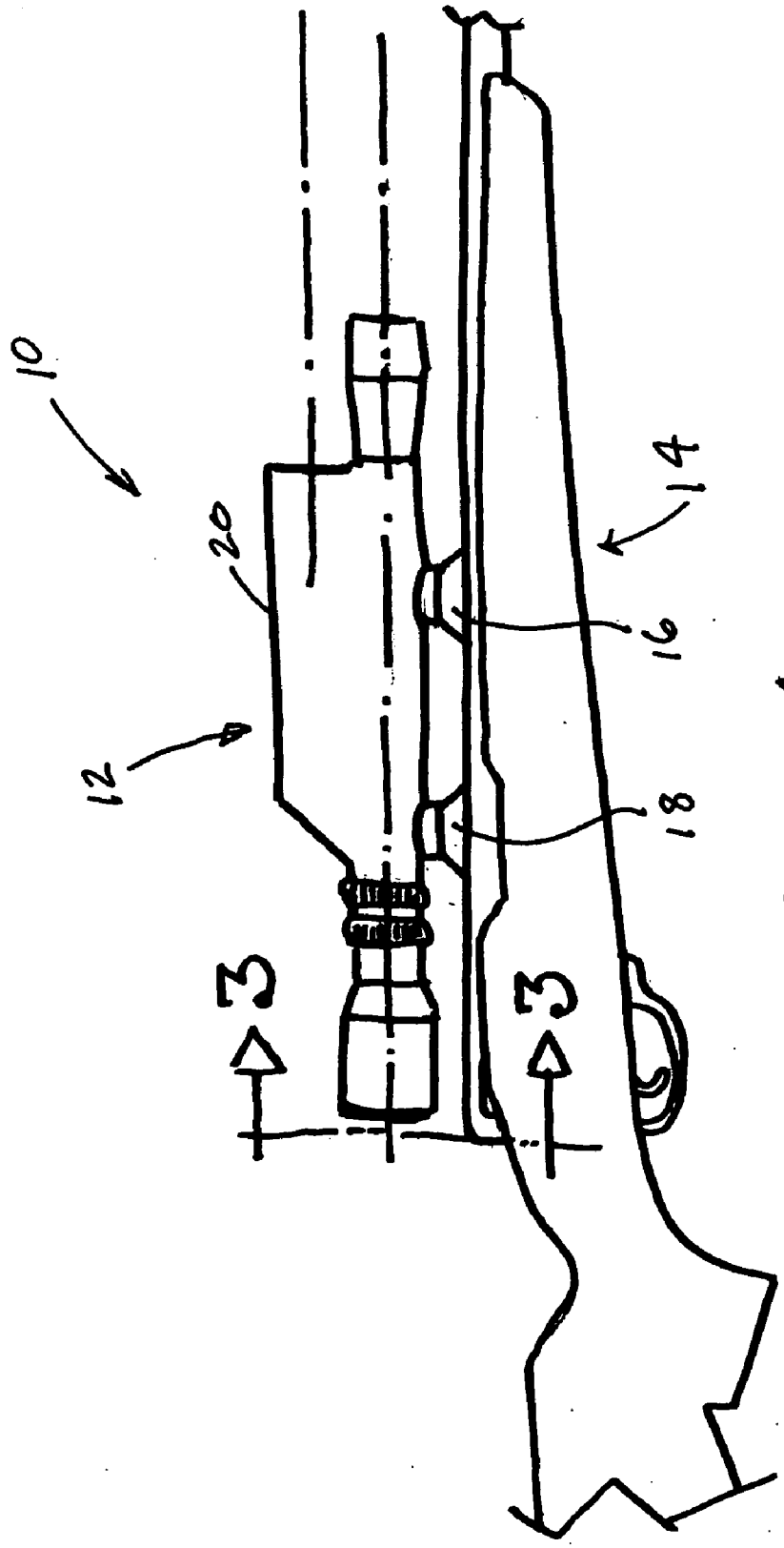

FIG. 1

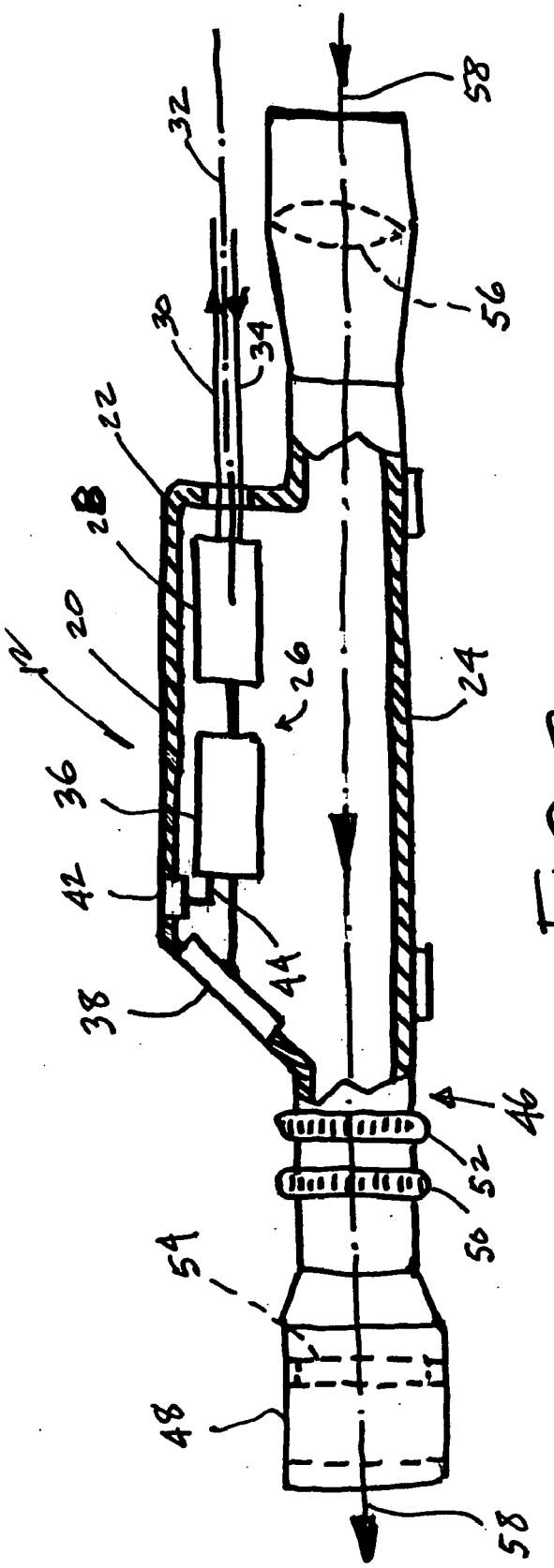

FIG. 2

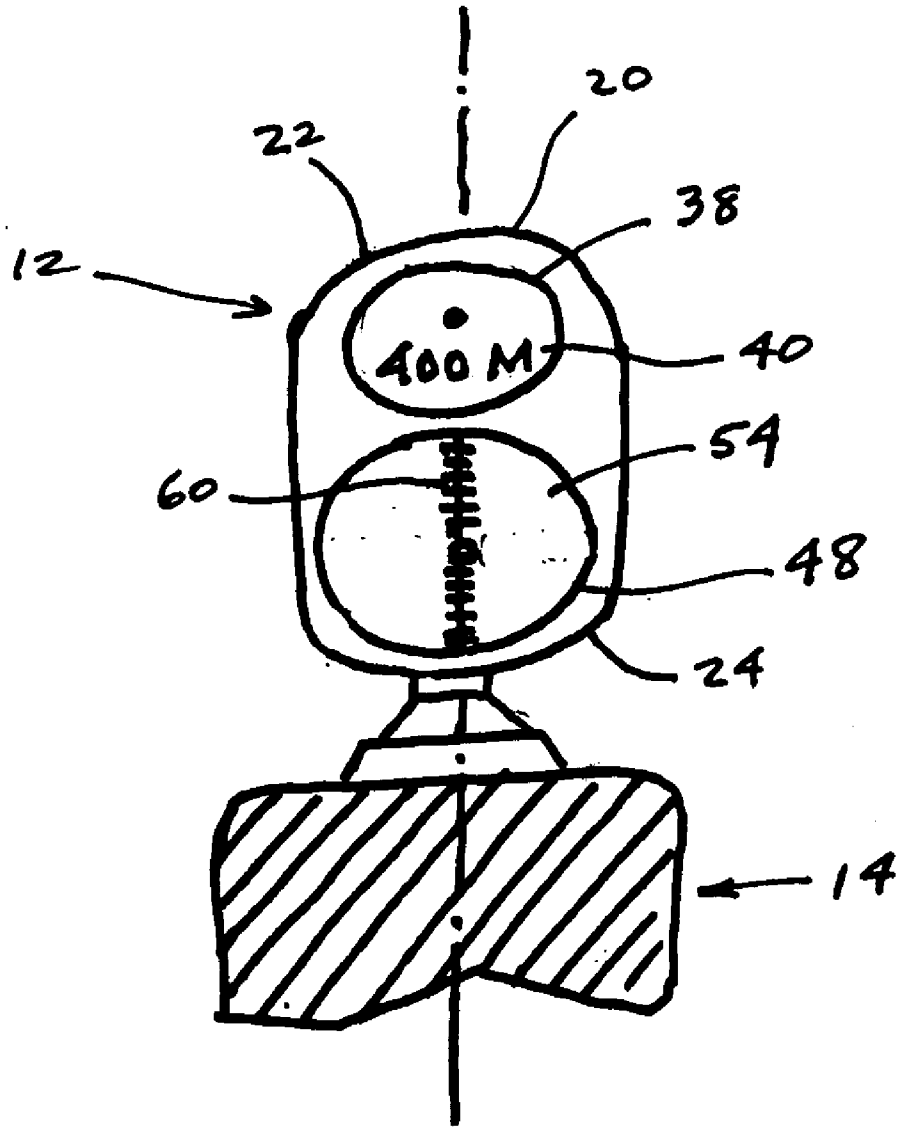

FIG. 3

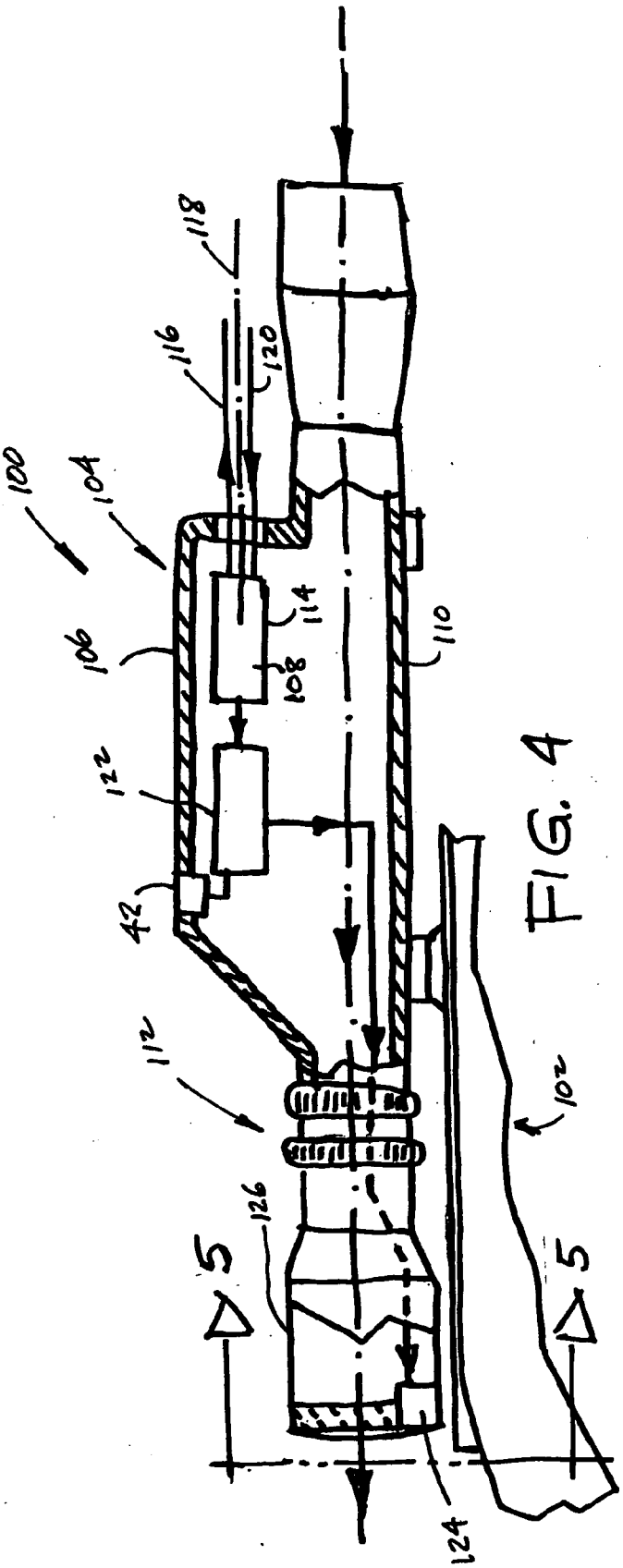

FIG. 4

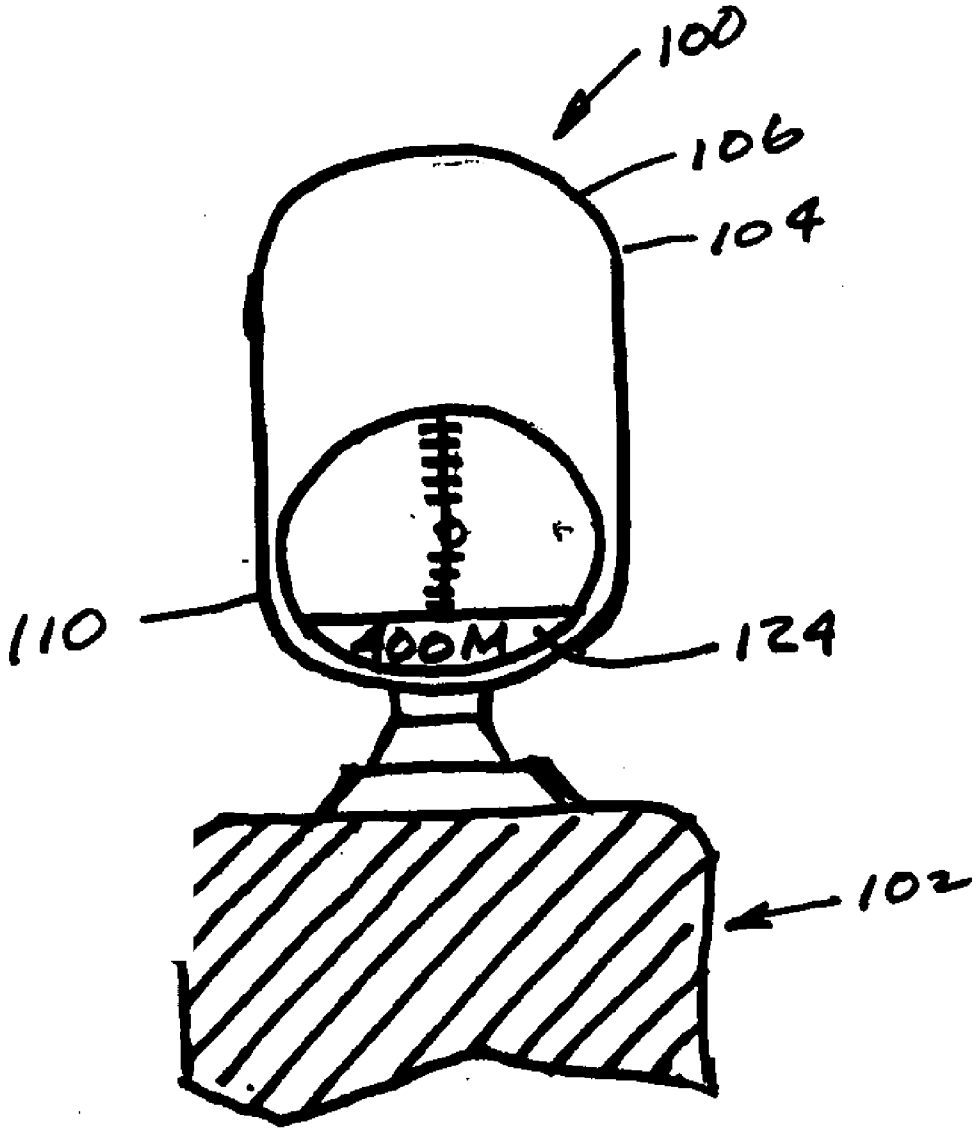

FIG. 5

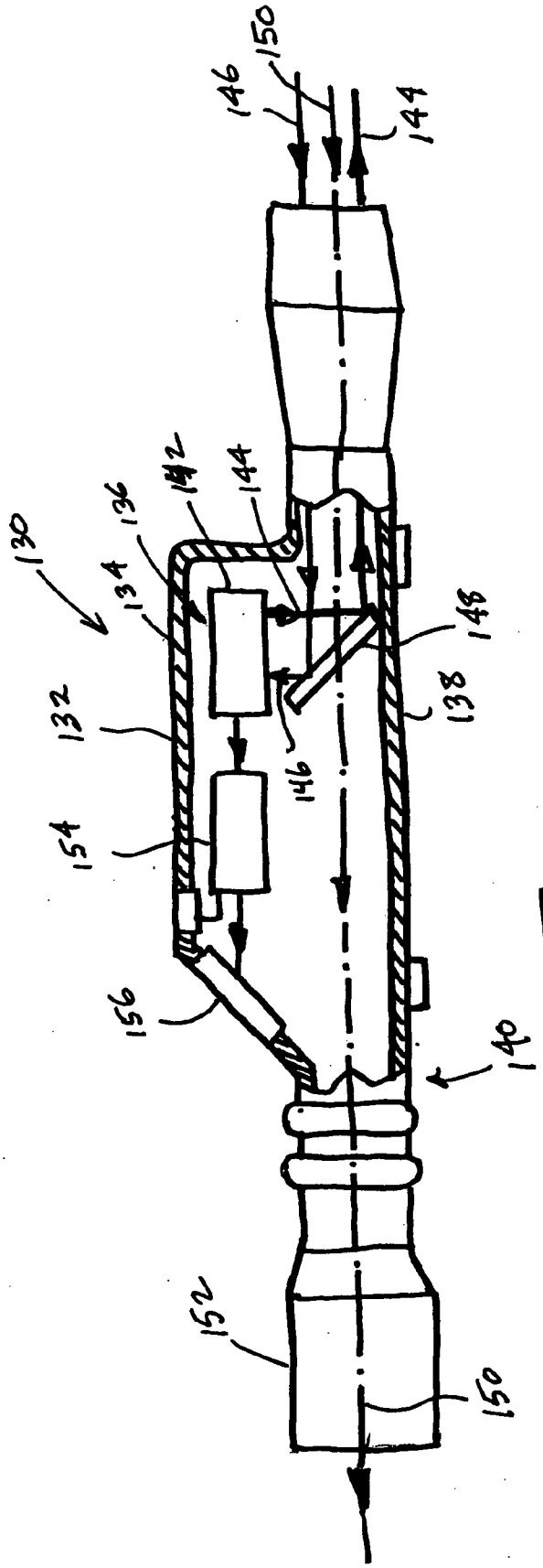
150
146
144
142
144
126
134
130
148
138
132
146
154
156
140
152
150

FIG. 6

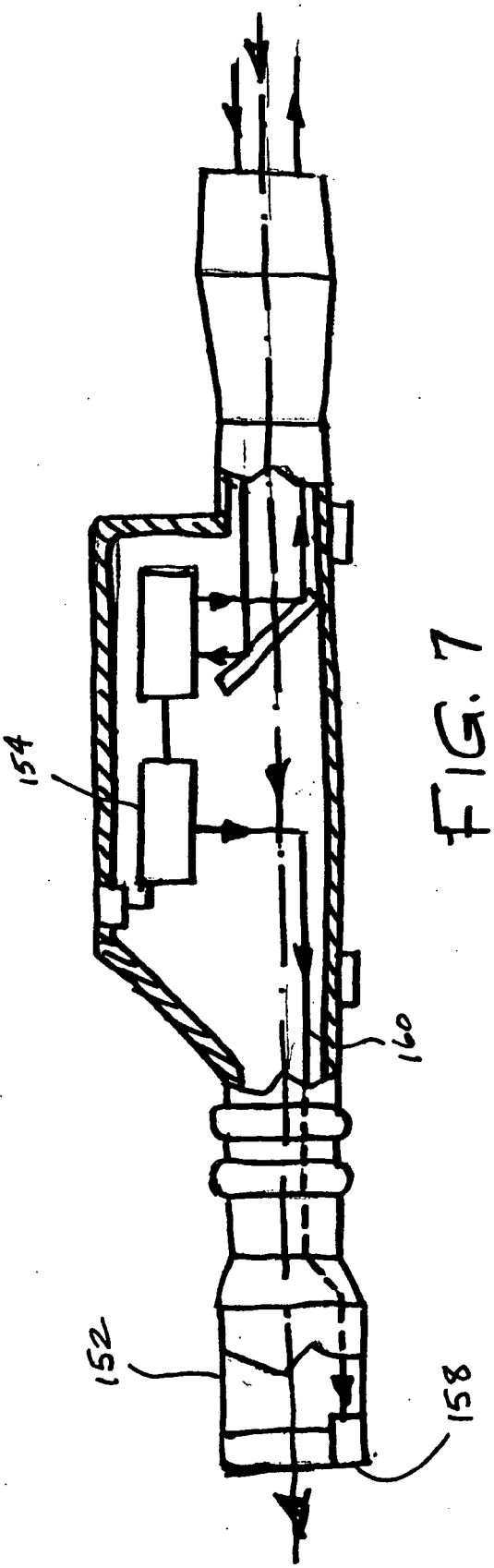

FIG. 7

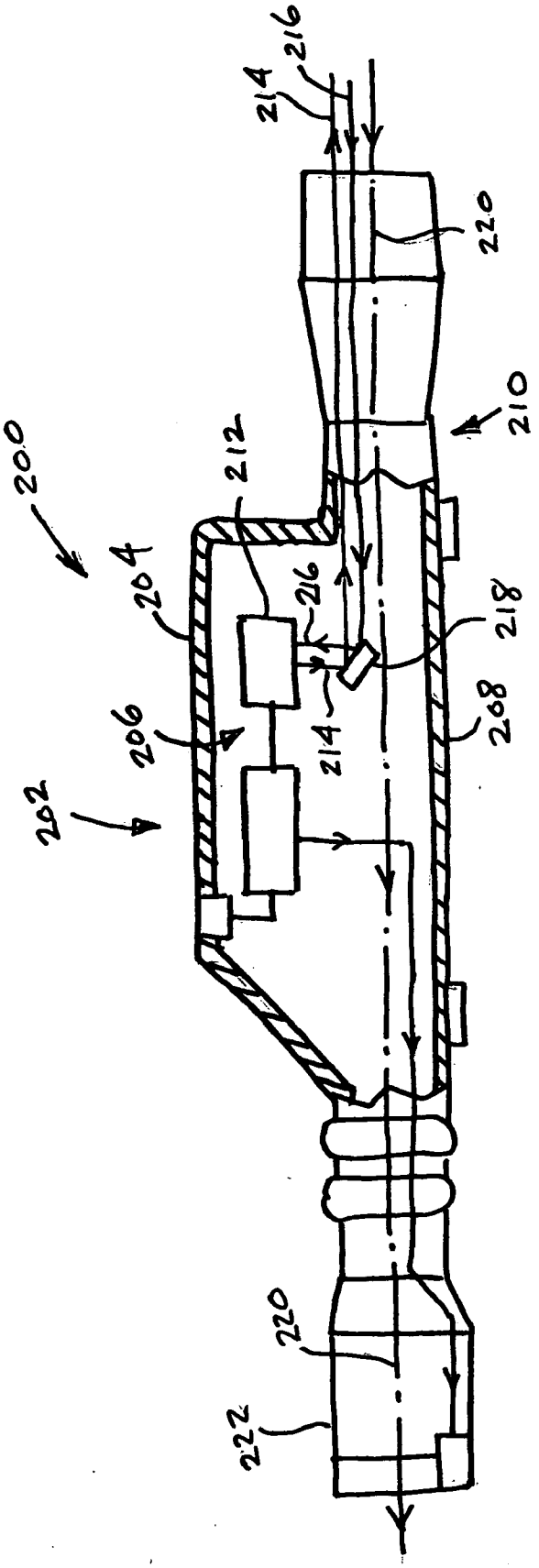

FIG. 8

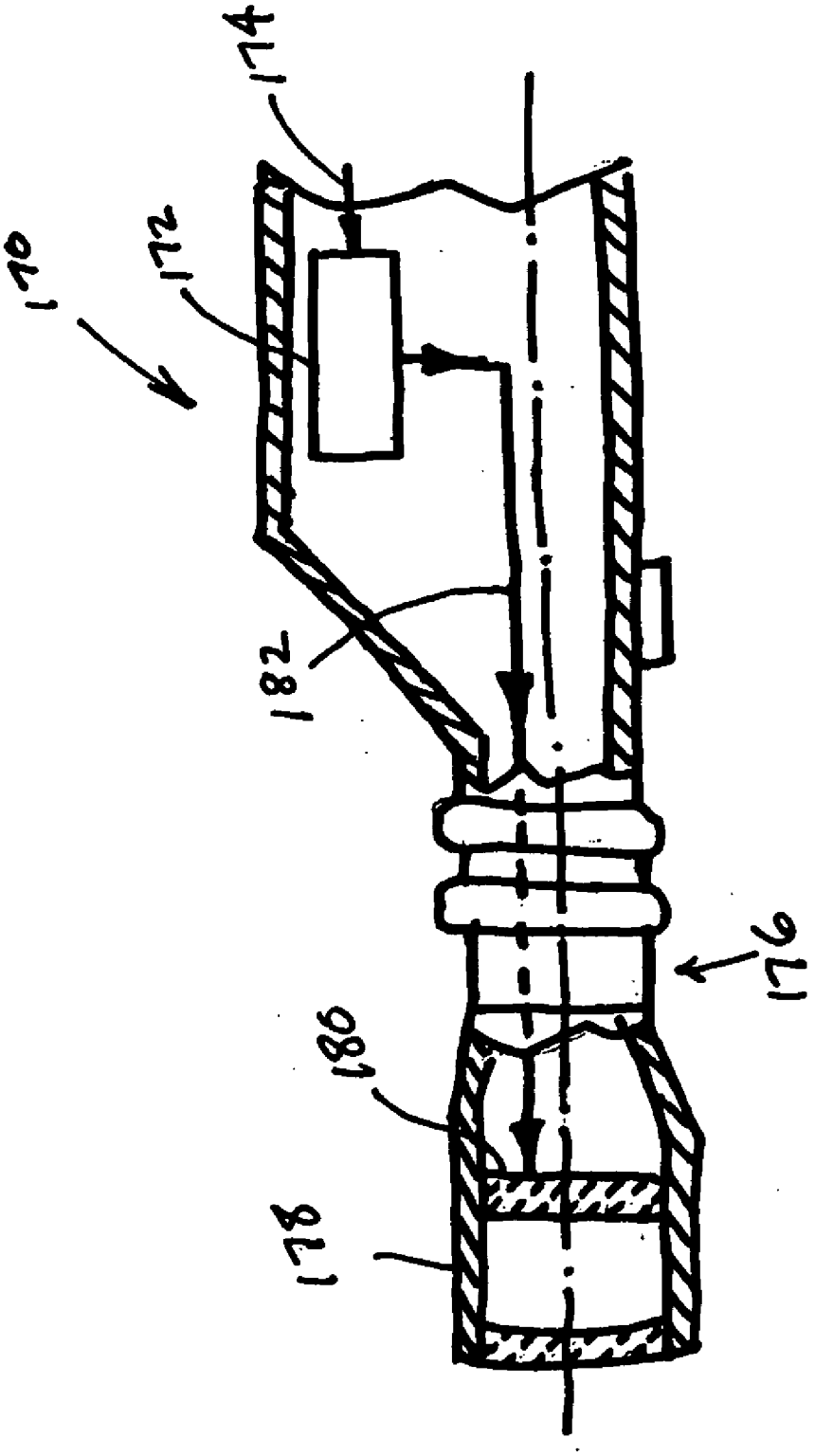

FIG. 9

LASER RANGEFINDER SIGHTING APPARATUS AND METHOD

CROSS REFERENCE TO RELATED APPLICATION

[0001] This application claims the benefit of U.S. Provisional Application No. 60/781,084 filed Mar. 9, 2006; that application is incorporated herein, by reference.

BACKGROUND OF THE INVENTION

[0002] 1. Field of the Invention

[0003] This invention relates generally to optical systems and particularly to laser rangefinder sighting apparatus and methods.

[0004] 2. Description of the Related Art

[0005] A laser rangefinder is an optical transceiver capable of determining the distance between the rangefinder and the target. A rangefinder includes a laser light source or laser transmitter and a photo detector or laser light receiver. Typically, the laser transmitter irradiates the target with one or more incident laser light pulses and the laser receiver receives the light pulses reflected from the target. A processor in the rangefinder determines the difference between the time of the transmission of a pulse and the time of the reception of the reflected pulse back at the rangefinder receiver. Using this time difference, the processor computes the range of the target. A numerical representation of the range may be displayed on a suitable electronic display on the rangefinder.

[0006] A laser rangefinder may have a first optical channel for transmitting the laser light pulses, a second optical channel for receiving the reflected pulse, and a third optical channel for viewing or visualizing the target. Each of these channels may have its own separate optical axis. Alternatively, portions of the optical axes of the receiving and viewing channels may be arranged along a common parallel axis, all three channels may be arranged coaxially, or still further, in parallel and coaxial combinations.

[0007] Multifunction, integrated systems combining laser rangefinders, telescopic and/or direct view optics, infrared optics, CCD-based visible TV subsystems, and so forth, have also been developed. These systems are generally designed for military use and therefore tend to be complex, bulky and expensive. For example, U.S. Pat. No. 6,020,994 discloses a multifunction, multispectral military sight assembly having numerous reflective, refractive and other optical components that must be carefully aligned. Thus, there remains a need for an integrated sight assembly that is simple and compact (that is, one that does not require complex and/or bulky optical systems), and that is moreover light weight and inexpensive. Such an assembly would have particular utility for rifles, pistols and bows used in recreational sport and hunting activities.

SUMMARY OF THE INVENTION

[0008] In accordance with one specific, exemplary embodiment of the invention, there is provided a sighting assembly comprising a housing having a first portion and a second portion. Mounted within the first portion of the housing is a laser rangefinder comprising a laser transceiver for transmitting a laser beam toward a target and for receiving a reflected laser beam from the target. The laser rangefinder is coupled to a display for indicating the distance to the target. Mounted within the second portion of the housing is a sight for viewing the target. The sighting assembly further includes at least one attachment on the housing for securing the assembly to a weapon.

[0009] Preferably the sight comprises a scope that may include a reticle. In one form of the invention, the reticle comprises elevation graduations.

[0010] In another form of the invention, the laser transceiver transmits and receives substantially along a first optical axis and the sight views the target along a second optical axis. The first and second optical axes may be fixed relative to each other. Alternatively, the first and second optical axes may comprise separate, parallel axes. As another alternative, the first and second optical axes may be substantially coaxial.

[0011] In yet another form of the invention, the sight may comprise a scope enclosing a reflecting surface positioned to intercept the first and second optical axes, the reflecting surface being adapted to redirect the laser beam transmitted by the laser transceiver to travel along the first optical axis and to redirect the laser beam reflected from the target to travel toward the transceiver.

[0012] The reflecting surface may comprise a mirror fixed relative to the housing and preferably the mirror may be smaller than the total optical diameter of the scope.

[0013] In still a further form of the invention, the sight may comprise a scope enclosing a beam splitter positioned to intercept the first and second optical axes, the beam splitter being adapted to (1) redirect the laser beam transmitted by the laser transceiver to travel along the first optical axis; (2) redirect the laser beam reflected from the target to travel toward the transceiver; and (3) transmit a view of the target along the second optical axis to an eyepiece of the scope.

[0014] According to another aspect of the invention, the laser rangefinder display may be mounted on the upper portion of the housing. Alternatively, the display may be mounted within an eyepiece of the scope.

[0015] Still further, the sighting assembly may also comprise a processor responsive to an output of the laser rangefinder for providing to the display information representative of the distance to the target.

[0016] The sighting assembly may comprise a processor connected to an output of the laser rangefinder for providing a control signal responsive to the output, the control signal being coupled to adjust an optical sighting element carried by the scope to automatically correct for projectile deflections.

[0017] Pursuant to another specific, exemplary embodiment of the invention, there is provided a weapon system comprising a weapon, a scope attached to the weapon for viewing a target, a trajectory compensating system for providing a distance indicative of the drop of a projectile fired by the weapon, and an adjustment system coupled to the scope for adjusting the alignment of the scope relative to the weapon in response to the distance signals. The adjustment system may adjust the elevation angle of the scope in response to the distance signal. The weapon system may further include a display for displaying the distance between the weapon and the target in response to the distance signal.

[0018] In accordance with yet another specific, exemplary embodiment of the invention, there is provided a method comprising providing a weapon comprising a projectile bore having an axis, the weapon having mounted thereon (1) a

sighting assembly comprising a laser rangefinder coupled to a range display and having an optical axis, and (2) a scope having a graduated reticle and an optical axis, the optical axes and the bore axis being parallel; sighting through the scope to acquire an image of the target; reading the display to determine the range to the target; and adjusting the orientation of the weapon to compensate for projectile deflection based on the range. The projectile deflection may comprise projectile drop and the adjusting of the weapon orientation comprises adjusting the elevation of the weapon. Still further, prior to adjusting the orientation of the weapon, an optical element of the scope may be adjusted in response to the determination of range.

[0019] Preferably, the adjusting of the optical element is performed automatically.

BRIEF DESCRIPTION OF THE DRAWINGS

[0020] The foregoing and other features, aspects and advantages of the present invention will become better understood with reference to the accompanying example drawings in which:

[0021] FIG. **1** is a side elevation view of a portion of a weapon system in accordance with the first exemplary embodiment of the invention;

[0022] FIG. **2** is a side elevation view, partly in cross section, of a laser rangefinder sighting assembly forming part of the weapon system depicted in FIG. **1**;

[0023] FIG. **3** is an end elevation view, in cross section, of the weapon system of FIG. **1** as seen along the line **3-3** in FIG. **1**, illustrating schematically the views seen by the shooter;

[0024] FIG. **4** is a side elevation view, partly in cross section, of a portion of a weapon system in accordance with an alternative embodiment of the invention;

[0025] FIG. **5** is an end elevation view in cross section of the weapon system of FIG. **4** as seen along the line **5-5** in FIG. **4**;

[0026] FIG. **6** is a side elevation view, partly in cross section of a sighting assembly for use in a weapon system in accordance with an alternative embodiment of the invention;

[0027] FIG. **7** is a side elevation view, partly in cross section, of a sighting assembly for use in a weapon system in accordance with another alternative embodiment of the invention;

[0028] FIG. **8** is a side elevation view, partly in cross section, of a sighting assembly for use in a weapon system in accordance with a further alternative embodiment of the invention; and

[0029] FIG. **9** is a side elevation view, partly in cross section, of a portion of a sighting assembly for use in a weapon system in accordance with yet another alternative embodiment of the invention.

DETAILED DESCRIPTION OF THE INVENTION

[0030] Generally, in accordance with one aspect of the present invention, there is provided apparatus and methods of mechanically packaging or integrating a laser rangefinder directly into a sighting assembly that can accurately determine the range to a target and provide sighting or aiming capabilities at low cost.

[0031] The various embodiments of the invention all utilize various optical and electronic components that are well known in the art and accordingly these components are not described or shown in detail.

[0032] FIG. **1** is a side elevation view of a weapons system **10** in accordance with one specific, exemplary embodiment of the present invention. Generally, the system **10** comprises a ranging and sighting assembly **12** mounted on a weapon such as a rifle **14** by means of at least one attachment and preferably by means of fore and aft rail-type attachments **16** and **18**. Instead of a rifle, the weapon may comprise a pistol, bow or other sport or hunting weapon. Generally, the ranging and sighting assembly **12** combines a laser rangefinder and a sight such as a scope enclosed within a single, unitary housing **20** attached to the rifle.

[0033] Turning now also to FIG. **2**, the housing **20** comprises an interchangeable upper portion **22** and lower portion **24**. The upper portion **22** contains a laser rangefinder **26** comprising an optical transceiver **28** including a transmitter that emits a laser beam **30** along an optical axis **32** and a laser detector that receives a beam **34** reflected from the target along the axis **32**. The transceiver **28** provides to a processor **36** a signal indicating the range of the target. The processor **36**, in a manner well known in the art, computes the range and provides an output signal to a display **38** representing the distance. The display **38**, mounted, for example, at the rear of the upper portion **22** of the housing **20**, provides a visual representation of the distance in the form, for example, of a digital readout **40** (FIG. **3**) that may be observed by the shooter along the optical axis of the laser rangefinder. Such displays and the visual images produced thereby in response to the output of a laser rangefinder are well known in the art. The display **38** may, for example, comprise a liquid crystal display, a light emitting diode display, a CRT display, or the like. The processor **36** may be programmed by entering appropriate instructions into the memory of the processor through a port **42** and associated bus **44** compatible with a standard such as the USB standard. The instructions may include the ballistics of the projectile that is to be fired. The port **42** may also receive a battery charger if rechargeable batteries are used to power the system.

[0034] The processor **36** may include logic circuitry to calculate the deflection from windage and projectile drop based on the type of projectile to be used. Such information is typically provided in tables that the user can consult. However, the processor can do this if provided with the ballistic information, then use this data to determine how far the image should be deflected for a given target distance.

[0035] The transceiver **28** is secured to the upper portion **22** of the housing so that it at all times is in a fixed position relative thereto. Both the transmitted and reflected beams **30** and **34** travel substantially along the same optical axis **32**.

[0036] The lower portion **24** of the housing **20** incorporates a sight which may comprise an optical sighting scope **46** comprising, as well known in the art, an eyepiece **48** through which the shooter views the target, rotatable rings **50** and **52** for adjusting such optical properties as magnification and focus, a reticle **54** and an objective lens **56** at the far end of the scope. The eyepiece, reticle and objective lens are aligned along an optical axis **58** extending parallel with the optical axis **32** of the laser rangefinder.

[0037] FIG. **3** illustrates in schematic form the views seen by the shooter. The shooter first acquires the target by

sighting through the scope eyepiece **48**, then moves his line of sight to the digital range readout or display **38** and, having acquired that information moves his eye back to the eyepiece **48**, adjusts the elevation of the rifle as required in accordance with a vertical scale **60** on the reticle **54** and then fires the weapon. The system will typically include a push button or other switch for triggering the laser rangefinder.

[0038] As noted, in the embodiment of FIGS. **1-3**, the scope and laser rangefinder form an assembly integrated into a single housing. It will be understood, however, that in general, the advantages of the invention may be realized so long as the scope and laser rangefinder are closely coupled.

[0039] It will be seen that the embodiment of FIGS. **1-3** provides a manual system that is extremely simple. The transmitted and reflected laser beams **30** and **34** lie substantially along the same optical axis **32** thereby eliminating the necessity of carefully aligning separate transmitter and receiver optical axes. Further, none of the parts is movable, eliminating errors produced by relatively movable components.

[0040] FIGS. **4** and **5** show in schematic form a ranging and sighting assembly **100** for attachment to a weapon **102** in accordance with a second embodiment of the invention. The ranging and sighting assembly **100** of the second embodiment comprises a single, unitary housing **104** having an upper portion **106** enclosing a laser rangefinder **108** and a lower portion **110** incorporating a sight that may comprise a scope **112**. The laser rangefinder **108** comprises, as before, a transceiver **114** for transmitting an incident laser beam **116** along an optical axis **118** and for receiving a reflected laser beam **120** along the same optical axis **118**. The transceiver **114** is boresighted to the optical axis of the sighting assembly. The transceiver generates a range signal applied as an input to a processor **122** also contained within the upper portion **106** of the housing. The processor **122**, in turn, generates an output signal applied to a display **124** within an eyepiece **126** of the scope. By integrating the display within the eyepiece, movement of the shooter's line of sight as required in the first embodiment is eliminated. Such movement is undesirable because it may be detected by the target or reacquisition of the target may be difficult if the target moves. With the second embodiment, the shooter can compensate for projectile drop and/or lateral deflection with virtually no delay.

[0041] With reference to FIG. **6**, there is shown in schematic form a ranging and sighting assembly **130** for inclusion in a weapon system in accordance with a third embodiment of the invention. As before, the ranging and sighting assembly **130** of the third embodiment comprises a single, unitary housing **132** having an upper portion **134** enclosing a laser rangefinder **136** and a lower portion **138** containing a sight which may be in the form of a scope **140**. The laser rangefinder **136** comprises a laser beam transceiver **142** for transmitting a laser beam **144** toward a target and for receiving a reflected beam **146** from the target. The transceiver **142** is secured to an inner surface of the housing **132** so as to be fixed relative thereto.

[0042] Besides the lenses and reticle previously described, the scope **140** encloses an optical element in the form of a beam splitter **148**. The beam splitter **148** is disposed to receive from the laser transceiver **142** the transmitted laser beam **144** that is reflected by the beam splitter **148** and thereby projected toward a target along an optical axis **150** that may coincide or essentially coincide with, or be closely parallel to, the optical axis of the scope **140**. The laser beam **146** reflected from the target enters the front of the scope along the optical axis **150**, and is reflected by the beam splitter and directed from there to the transceiver **142**. A view of the target is seen along the optical axis **150** through the beam splitter **148**. The beam splitter **148** is selected to reflect laser wavelengths and to transmit visible light wavelengths to an eyepiece **152**. The coaxiality or coincidence of the optical axes of the rangefinder and the scope enhances the thermal and mechanical stability of the sighting assembly.

[0043] The beam splitter **148** is preferably coated so that the light beams to and from the transceiver **142** are reflected and the light from the target is transmitted to the eyepiece **152**. The laser transceiver **142** may transmit and be responsive to light at various wavelengths, such as the visible and/or infrared regions of the electromagnetic spectrum.

[0044] The laser transceiver **142** provides an output to a processor **154** in turn having an output coupled to a display **156** mounted in the rear of the upper portion **134** of the housing or within the scope's eyepiece **152**, as previously described. It will be evident that the embodiment of FIG. **6** may be modified to provide for an internal display **158** within the eyepiece **152**, as in a fourth embodiment depicted in FIG. **7**. The processor **154** provides an output signal representing the range to the display along a bus **160**.

[0045] With reference to FIG. **8**, there is shown in schematic form a ranging and sighting assembly **200** for inclusion in a weapon system in accordance with a fifth embodiment of the invention. As before, the ranging and sighting assembly **200** of the fifth embodiment comprises a single, unitary housing **202** having an upper portion **204** enclosing a laser rangefinder **206** and a lower portion **208** containing a sight that may be in the form of a scope **210**. The laser rangefinder **206** comprises a laser beam transceiver **212** for transmitting a laser beam **214** toward a target and for receiving a reflected beam **216** from the target. The transceiver **212** is preferably secured to an inner surface of the housing **202** so as to be fixed thereto.

[0046] Besides the lenses and reticle previously described, the scope **210** preferably encloses an optical element in the form of a small, fixed position mirror **218**. The mirror **218** is preferably smaller than the total optical diameter of the scope and is so angularly oriented to reflect all or nearly all of the laser energy. The mirror **218** is disposed to receive from the laser transceiver **212** the transmitted laser beam **214** which is reflected by the mirror and thereby projected toward a target along an optical axis that may coincide or essentially coincide with or be closely parallel to the optical axis **220** of the scope **210**. The laser beam **216** reflected from the target enters the front of the scope along the optical axis and is reflected by the small mirror **218** and directed from there to the transceiver **212**. A view of the target bypasses the small mirror and is seen directly in an eyepiece **222** along the optical axis **220**.

[0047] Further alternatives will suggest themselves to those skilled in the art. The most complete integrated embodiment of the invention would have "closed loop" control of the sighting of the weapon by determining the range to the target, computing the correction required for the given range, applying the correction to the sighting device, and providing an indication in the display of the readiness of the weapon. For example, pursuant to another embodiment of the invention, FIG. **9** depicts a portion of a laser

rangefinder and scope assembly **170** that is fully automated. The assembly **170** comprises a laser rangefinder (not shown), a processor **172** coupled to an output **174** of the rangefinder, and a scope **176** having an eyepiece **178** and a reticle **180**. In the embodiment of FIG. **9**, the reticle **180** is adjustably mounted so that its position may be controlled by an actuator (not shown). The assembly **170** includes a feedback path **182** between the processor **172** and the reticle **180** (or other optical element) for automatically adjusting the position thereof in response to the range computed by the processor **172**. Preferably, the position of an optical graduated hairline image incident on the reticle is controlled by the processor.

[0048] It will be further evident that laser rangefinders producing laser emissions of various wavelengths may be used. Those wavelengths may comprise, by way of example and not limitation, 0.8-0.98 microns, 1.53-1.58 microns 1.062-1.066 microns and 1.180-1.200 microns.

[0049] The integrated, internal or external, parallel or coaxial optical approach may provide for automatic ballistic compensation based on range, initial or muzzle velocity, and/or ballistic coefficient of the projectile. The display may include ranging distance. For example, as already explained, the system may provide for automatically holding, lowering or raising the reticle to compensate for projectile rise and drop. The user would designate the target using the laser rangefinder and the reticle would be automatically moved to compensate for projectile flight. Also, by displaying the range, the user may determine the feasibility or probability of hitting the target.

[0050] The system is intended for embedding, external use and/or integrated with telescopic, that is, optics-based scopes, direct view optical sighting systems, camera based sighting systems in which a view of the target may be displayed via a CCD sensor or detector array, conventional "iron sights", pin sights, fiber optic based sights, low light sights, infrared sights (both 3-5 micron and 8-12 micron infrared sighting systems and/or subsets of those wavelengths), illuminated sights, laser dot and/or designater based sights, aiming apparatus or offhand/unaided sighting approaches, that can be used on small and large bore rifles, pistols, and bows for the purpose of simultaneous or sequential range finding and aiming and/or aiming compensation of projectile trajectories used in recreational hunting, sport, and like applications. The laser rangefinder and optical scope may be mounted coaxially or in a parallel manner or in a combined coaxial and parallel fashion. The system may also be used with an infrared sighting system or with a combined infrared and visible light sighting system.

[0051] It will be evident from the foregoing that various embodiments of the invention may include a totally external laser rangefinder integration (i.e., external laser transmitter, external detector and electronics); an external laser transmitter and internal laser detector receiver and the electronics either internal or external; an internal laser transmitter and internal laser detector receiver with the electronics either internal or external; and an internal laser transmitter and external laser detector receiver with the electronics either internal or external.

[0052] The embodiments of the invention described herein are exemplary and numerous modifications, variations and rearrangements can be readily envisioned to achieve substantially equivalent results, all of which are intended to be embraced within the spirit and scope of the invention as defined in the appended claims.

We claim:

1. A sighting assembly comprising:

a housing having a first portion and a second portion;

a laser rangefinder mounted within the first portion of the housing, the laser rangefinder comprising a laser transceiver for transmitting a laser beam toward a target and for receiving a reflected laser beam from said target, the laser rangefinder being coupled to a display for indicating the distance to the target;

a sight mounted in the second portion of the housing for viewing the target; and

at least one attachment on said housing for securing the assembly to a weapon.

2. The assembly of claim **1** in which:

the sight comprises a scope.

3. The assembly of claim **2** in which:

the scope includes a reticle.

4. The assembly of claim **3** in which:

the reticle comprises elevation graduations.

5. The assembly of claim **1** in which:

the laser transceiver transmits and receives substantially along a first optical axis and the sight views the target along a second optical axis.

6. The assembly of claim **5** in which:

the first and second optical axes are fixed relative to each other.

7. The assembly of claim **5** in which:

the first and second optical axes are separate, parallel axes.

8. The assembly of claim **5** in which:

the first and second optical axes are substantially coaxial.

9. The assembly of claim **1** in which:

the sight comprises a scope enclosing a reflecting surface positioned to intercept the first and second optical axes, the reflecting surface being adapted to (1) redirect the laser beam transmitted by the laser transceiver to travel along the first optical axis; and (2) redirect the laser beam reflected from the target to travel toward the transceiver.

10. The assembly of claim **9** in which:

the reflecting surface comprises a mirror fixed relative to the housing.

11. The assembly of claim **9** in which:

the mirror is smaller than the total optical diameter of the scope.

12. The assembly of claim **1** in which:

the sight comprises a scope enclosing a beam splitter positioned to intercept the first and second optical axes, the beam splitter being adapted to (1) redirect the laser beam transmitted by the laser transceiver to travel along the first optical axis; (2) redirect the laser beam reflected from the target to travel toward the transceiver; and (3) transmit a view of the target along the second optical axis to an eyepiece of the scope.

13. The assembly of claim **1** in which:

the display is mounted on the upper portion of the housing.

14. The assembly of claim **1** in which:

the display is mounted within an eyepiece of the scope.

15. The assembly of claim **1** further comprising:

a processor responsive to an output of the laser rangefinder for providing to said display information representative of the distance to the target.

16. The assembly of claim **1** further comprising:

a processor connected to an output of the laser rangefinder for providing a control signal responsive to said output, said control signal being coupled to adjust an optical sighting element carried by the scope to automatically correct for projectile deflections.

17. A weapon system, comprising:

a weapon;

a scope attached to said weapon for viewing a target;

a trajectory compensating system which provides a distance which indicates the projectile drop of a projectile fired by said weapon; and

an adjustment system coupled to said scope for adjusting the alignment of said scope relative to said weapon in response to said distance signals.

18. The system of claim **17**, in which:

said adjustment system adjusts the elevation angle of said scope in response to said distance signal.

19. The system of claim **17**, further including:

a display for displaying the distance between said weapon and said target in response to said distance signal.

20. A method of sighting a target comprising:

providing a weapon comprising a projectile bore having an axis, the weapon having mounted thereon (1) a sighting assembly comprising a laser rangefinder coupled to a range display and having an optical axis, and (2) a scope having a graduated reticle and an optical axis, said optical axes and said bore axis being parallel;

sighting through said scope to acquire an image of said target;

reading the display to determine the range to said target; and

adjusting the orientation of the weapon to compensate for projectile deflection based on the range.

21. The method of claim **20** in which:

the projectile deflection comprises projectile drop and the adjusting of the weapon orientation comprises adjusting the elevation of the weapon.

22. The method of claim **20** further comprising:

prior to adjusting the orientation of the weapon, adjusting an optical element of the scope in response to the determination of range.

23. The method of claim **22** wherein:

the adjusting of the optical element is performed automatically.

* * * * *