Oct. 20, 1970 T. M. TURNER 3,535,051

RECESSED EXPELLER VANES

Filed Dec. 3, 1968 2 Sheets-Sheet 1

Fig. 1

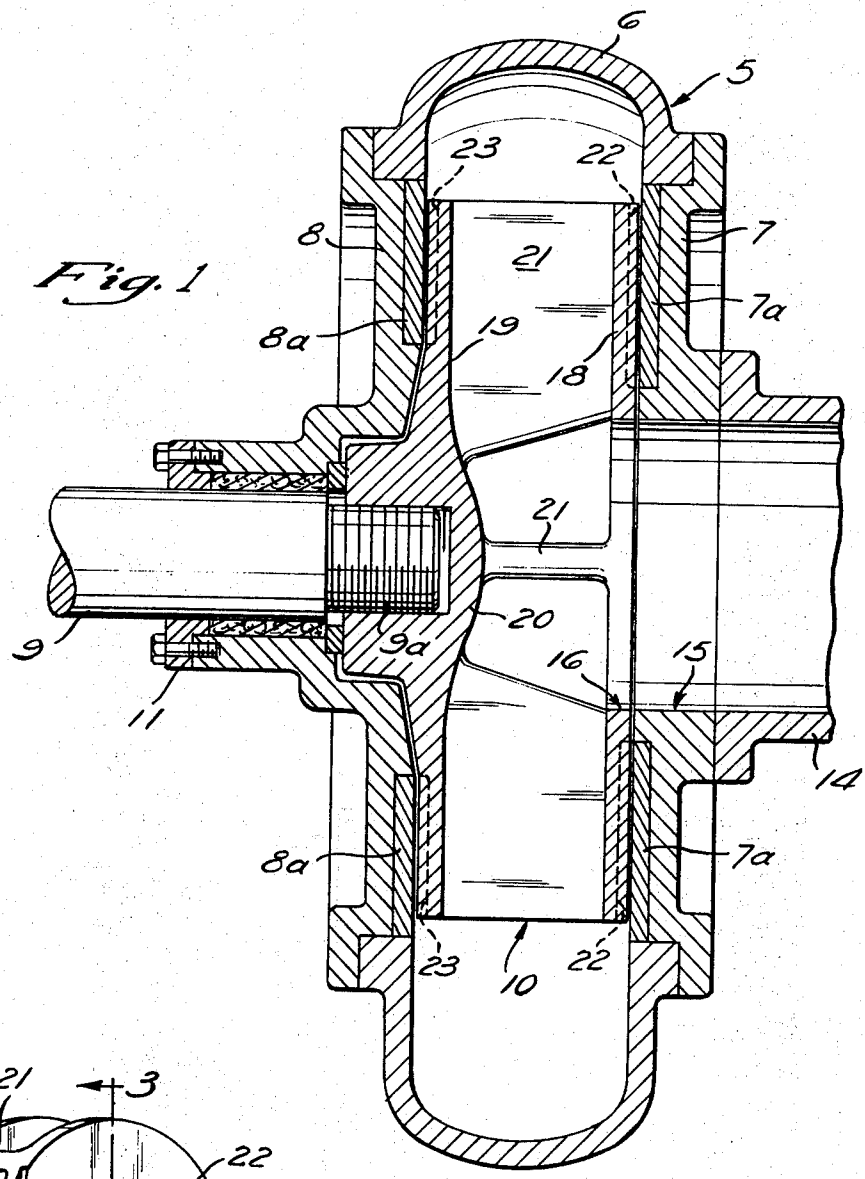

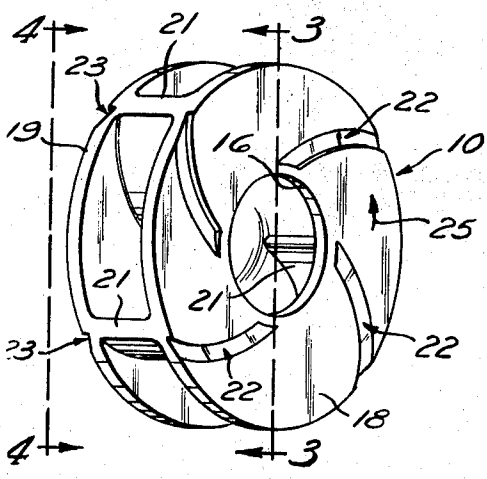

Fig. 2

INVENTOR
THOMAS MILES TURNER
BY
McNENNY, FARRINGTON, PEARNE & GORDON
Donald W. Farrington
ATTORNEYS

Oct. 20, 1970 T. M. TURNER 3,535,051

RECESSED EXPELLER VANES

Filed Dec. 3, 1968 2 Sheets-Sheet 2

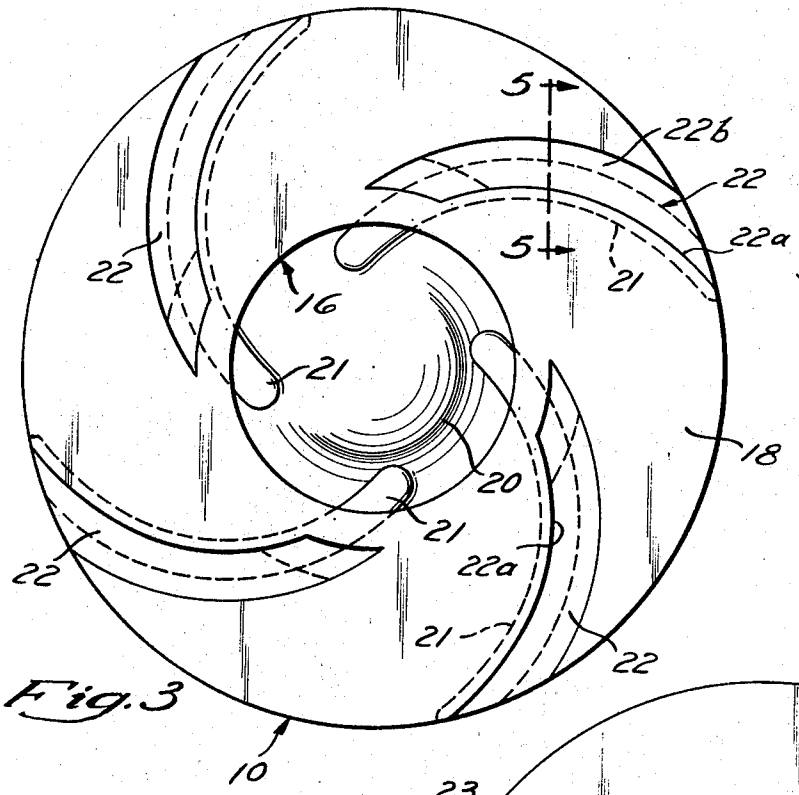

Fig. 3

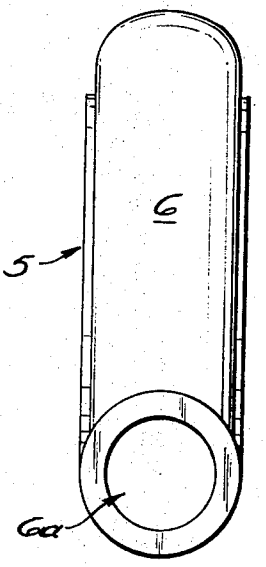

Fig. 6

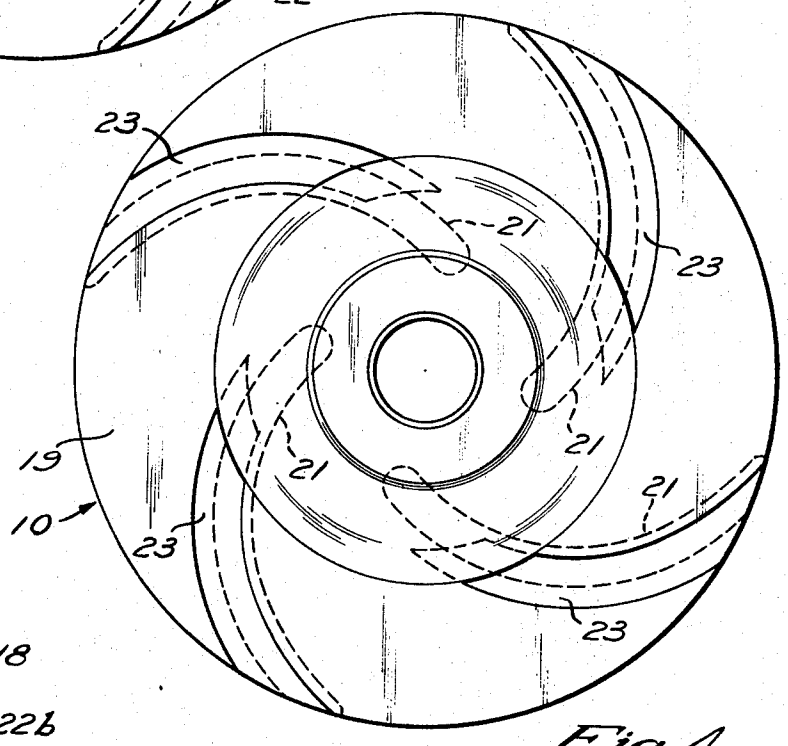

Fig. 4

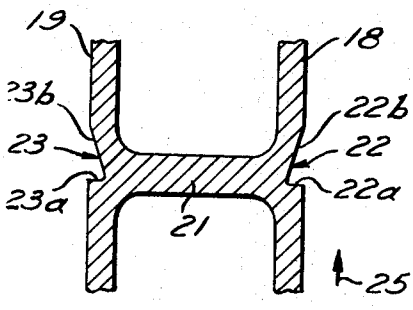

Fig. 5

INVENTOR
THOMAS MILES TURNER
BY
McNENNY, FARRINGTON, PEARNE & GORDON
Donald W. Farrington
ATTORNEYS

United States Patent Office 3,535,051 Patented Oct. 20, 1970

3,535,051

RECESSED EXPELLER VANES

Thomas Miles Turner, Severna Park, Md., assignor to Ellicott Machine Corporation, Baltimore, Md., a corporation of Maryland

Filed Dec. 3, 1968, Ser. No. 780,857
Int. Cl. F04d 1/00, 29/00, 29/10
U.S. Cl. 415—212 6 Claims

ABSTRACT OF THE DISCLOSURE

The invention here provides a more efficient centrifugal pump for hydraulic dredges wherein a rotating impeller having radially extending blades carried by spaced shrouds and wherein the outer faces of the shrouds have radially extending grooves which function as expeller vanes to remove sand and other particulate matter from the spaces between the shrouds and the inner wall or liner of the pump case.

OBJECTS OF THE INVENTION

It is among the objects of the present invention to provide a centrifugal dredge pump having an impeller mounted for rotation within a pump case and wherein the pump case is characterized by having a suction side head and an engine side head and wherein the impeller shroud adjacent the inner wall of the heads is characterized by having recessed expeller vanes to remove particulate matter from the space between the shrouds and the heads.

It is a further object of this invention to provide a dredge pump according to the preceding object wherein a recessed expeller vane is formed with at least one wall thereof being substantially normal to the radial face of the shroud.

It is a further object of the invention to provide an impeller as described in the preceding objects wherein a wall of the recessed expeller vane slopes downwardly and inwardly toward said normal wall at the radial face of the shroud.

It is a further object of this invention to provide a dredge pump impeller as described in the preceding objects wherein the recessed expeller vane curves outwardly to the periphery of the impeller so as to discharge the material carried by the vane at the periphery of the shroud and into the pump case discharge area.

THE PROBLEM

Centrifugal dredge pumps are usually designed for pumping a particular type of mixture comprising water and solids. The useful work performed by the pump is determined by the ratio of solids to water. The optimum design of a pump impeller for a particular type of mixture moves the maximum amount of solids for a given pump size and a given power unit.

Accordingly the impeller blades should have the maximum width permitted by the spaces between the suction side head of the pump and the engine side head of the pump. It will be understood that the shrouds ordinarily perform no pumping function and, therefore, should have a minimum wall thickness consistent with their load-carrying function and should have a minimum space between the outer wall of the shroud and the inner wall of the adjacent pump head. Excessive clearance in this area results in recirculation of water which is heavily loaded with solids. The abrasive effect of the solids increases the wear on both the shrouds and heads and the "load up" of the space between the shroud and the head with sand causes power losses and lowers the overall efficiency of the pump. Numerous attempts have been made to clean the space between the shrouds and the head of solids which

adversely affect the efficiency of the pump. One of such attempts has included the provision of raised expeller vanes in the form of ribs which project from the face of the shroud. Such expedients leave considerable space for the accumulation of spoil between such projecting ribs on the radial face of the shroud. Such prior art efforts are characterized by cavitation and recirculation of water and solids in the space between the projecting ribs.

THE SOLUTION OF THE PROBLEM

The present invention provides a pump impeller having a shroud wherein the outer radial wall of the shroud is provided with an expeller vane in the form of a groove or channel extending from the central area of the shroud to its periphery. Such grooves or channels function somewhat in the manner of centrifugal pumps so that the water and solids collected in the grooves will discharge radially.

Assuming that the same thickness of shroud for its load-carrying ability is utilized, a wider impeller blade may be used without widening the pump case. Accordingly with the present invention a narrower pump case may be employed as compared to the prior art devices having wiper vanes in the form of projecting ribs. Cavitation is minimized since the space between the recessed expeller vanes is occupied by the material of the shroud.

Othr objects and advantages will appear from the following description and the appended drawings wherein:

FIG. 1 is a transverse sectional view of a dredge pump made according to the present invention;

FIG. 2 is a perspective view of the pump impeller made according to the present invention;

FIG. 3 is an elevation of the suction side of the pump impeller corresponding to a view taken at plane 3—3 of FIG. 2;

FIG. 4 is an elevation of the engine side of the pump impeller taken as indicated by plane 4—4 of FIG. 2;

FIG. 5 is a sectional view of the pump impeller taken as indicated by the plane 5—5 of FIG. 3; and

FIG. 6 is an elevation of the pump case showing the tangential discharge.

Referring to the drawings, the pump case is indicated in FIG. 1 in its entirety at **5**. The pump case comprises an annular ring section **6** which carries the tangential pump outlet **6***a*. The suction side head **7** is secured to the ring **6** and the engine side head **8** is also secured to the ring **6**. The pump impeller indicated in its entirety at **10** is mounted for rotation by engine shaft **9** which extends into the pump through a stuffing box **11** on the engine side head **8**. The pump impeller **10** may be secured to the shaft **9** by a threaded connection **9***a* as shown or by other conventional drive means. The ring section **6** of the pump is provided with a tangential outlet **6***a* and said outlet **6***a* is connected to a discharge pipe.

The suction side head **7** is connected to a suction line **14** which in turn leads to a submerged cutter, and line **14** brings the material being dredged from the cutter to the pump. The suction side head **7** is provided with a suction side opening **15** which leads to the central area of the impeller **10**. Preferably the suction side head **7** and the engine side head **8** are provided with annular head liners **7***a* and **8***a*, respectively. The head liners **7***a* and **8***a* are usually formed of wear-resistant alloys.

The impeller **10** comprises an integrally formed front shrouds **18**, a back shroud **19**, a hub **20**, and impeller blades **21**. In the embodiment of the invention here illustrated four curved blades are shown, but it will be understood that the number of blades employed will be varied from time to time depending on the characteristics of the solids and water which are to be pumped. The front shroud **18** is formed with recessed expeller vanes **22** and the back shroud **19** is provided with recessed expeller vanes **23**. In the embodiment of the invention here illus-

trated the recessed expeller vanes correspond to the number of pumping blades **21**, but this is not critical. For example, a four-blade impeller may be provided with two recessed expeller vanes. The important consideration from the design standpoint is that the blades and also the wiper vanes provide a balanced condition without eccentric mass. The front shroud **18** is provided with a suction opening **16** which is aligned with the suction head opening **15**. Preferably the pump blades **21** curve outwardly from the central area of the impeller and the recessed expeller vanes **22** and **23** also curve outwardly in the shrouds. It will be noted that the vanes in the form illustrated curve along the path of the pumping blades. In this manner the cross-section or thickness of the shroud is maintained for its load bearing requirements. The load-carrying ability of the shroud is not reduced in an area which forms the expeller vane.

Preferably the recessed expeller vanes **22** and **23** each have one wall **22***a* and **23***a* which is substantially normal to the face of the shroud. This normal wall is related to the directional rotation of the impeller as indicated by the arrow **25**. (See FIGS. 2 and 5.) The other side wall of each expeller vane is indicated as at **22***b* and **23***b*. The wals **22***b* and **23***b* preferably slope downwardly and inwardly to intersect the normal wall.

Although one form of the invention is described herein in considerable detail, it will be understood that numerous variations may be made therein without departing from the scope of the invention as defined in the following claims.

What is claimed is:

1. A centrifugal pump for a dredge comprising a pump case having an annular ring section, a suction side head having a flat smooth surface secured to said ring section, an engine side head having a flat smooth surface secured to said ring section, a drive shaft mounted for rotation in said engine side head, an impeller secured to said shaft within the pump case, a pump inlet in said suction side head, said impeller having a front shroud adjacent the flat smooth inner wall of said suction side head, said impeller having a back shroud adjacent the flat smooth inner wall of said engine side head, impeller blades carried between said shrouds, said front shroud having a central opening aligned with a central opening in said suction side head, said front shroud having recessed expeller vanes in the form of radially extending grooves in the wall of the shroud adjacent the inner wall of the suction side head, said recessed expeller vanes being in the form of V-shaped grooves which have one wall thereof normal to the radial face of the shroud and the other wall thereof at an angle to the face sloping in the direction of the pump rotation to facilitate filling the expeller vanes with sand and water.

2. A centrifugal pump as described in claim **1** wherein both the front and back shrouds are provided with recessed expeller vanes in the wall of the shroud adjacent the flat smooth surface of the front and back pump heads.

3. A centrifugal pump as described in claim **1** wherein the impeller blades between the shrouds curve outwardly from a central pump inlet area to the periphery of the shrouds and the front edge of each impeller blade has a radial extent less than the radial extent of the front shroud and the rear edge of each impeller blade has a greater radial extent than the radial extent of the front shroud.

4. A centrifugal pump as described in claim **1** where the recessed expeller vanes curve outwardly from a central pump inlet area to the periphery of the shrouds to discharge sand and water carried by the recessed expeller vanes at the periphery of the shrouds.

5. A centrifugal pump as described in claim **1**, wherein the recessed expeller vanes are curved outwardly at the same curvature and in the same shroud area as the main pump impeller blades carried between the shrouds.

6. A centrifugal pump for a dredge comprising a pump cas having an annular ring section, a suction side head having a flat smooth surface secured to said ring section, an engine side head having a flat smooth surface secured to said ring section, a drive shaft mounted for rotation in said engine side head, an impeller secured to said shaft within the pump case, a pump inlet in said suction side head, said impeller having a front shroud adjacent the flat smooth inner wall of said suction side head, said impeller having a back shroud adjacent the flat smooth inner wall of said engine side head, impeller blades carried between said shrouds, said front shroud having a central opening aligned with a central opening in said suction side head, said front shroud having recessed expeller vanes in the form of radially extending grooves in the wall of the shroud adjacent the inner wall of the suction side head, said recessed expeller vanes being in the form of V-shaped grooves, one wall of each of said grooves being normal to the radial face of the shroud to form a radial pumping surface, and a second wall of each of said grooves sloping upwardly toward the said radial face of the shroud and in a direction away from the direction of the pump rotation.

References Cited

UNITED STATES PATENTS

3,112,708	12/1963	Kaufmann	103—111
3,139,831	7/1964	Pollar	103—111
1,003,020	9/1911	Webb	103—103
2,163,464	6/1939	Llewellyn	103—114
2,265,758	12/1941	Klosson	103—111
2,641,190	6/1953	Johnson	103—112
2,975,714	3/1961	Nechine	103—111
3,020,850	2/1962	Meckenstock	103—111
2,127,865	8/1938	Goddard	103—115

FOREIGN PATENTS

156,589	5/1954	Australia.
809,758	8/1951	Germany.
369,966	3/1932	Great Britain.
502,213	9/1938	Great Britain.
28,327	1903	Great Britain.

HENRY F. RADUAZO, Primary Examiner

U.S. Cl. X.R.

415—204