(12) INTERNATIONAL APPLICATION PUBLISHED UNDER THE PATENT COOPERATION TREATY (PCT)

(19) World Intellectual Property Organization
International Bureau

(43) International Publication Date
27 November 2003 (27.11.2003)

PCT

(10) International Publication Number
WO 03/096952 A2

(51) International Patent Classification[7]: A61G

(21) International Application Number: PCT/IB03/01533

(22) International Filing Date: 24 April 2003 (24.04.2003)

(25) Filing Language: Italian

(26) Publication Language: English

(30) Priority Data:
PCT/IT02/00269 24 April 2002 (24.04.2002) IT

(71) Applicant *(for all designated States except US)*: **SITES S.r.l.** [IT/IT]; Via Cavalieri di Vittorio Veneto, I-23870 Cernusco Lombardone (IT).

(72) Inventors; and

(75) Inventors/Applicants *(for US only)*: **TURINA, Luigi** [IT/IT]; Via Valfredda, 3, I-23874 Montevecchia (IT). **TURINA, Roberto** [IT/IT]; Via Valfredda, 3, I-23874 Montevecchia (IT).

(74) Agent: **GISLON, Gabriele**; Marietti, Gislon e Trupiano S.r.l., Via Larga, 16, I-20122 Milan (IT).

(81) Designated States *(national)*: AE, AG, AL, AM, AT, AU, AZ, BA, BB, BG, BR, BY, BZ, CA, CH, CN, CO, CR, CU, CZ, DE, DK, DM, DZ, EC, EE, ES, FI, GB, GD, GE, GH, GM, HR, HU, ID, IL, IN, IS, JP, KE, KG, KP, KR, KZ, LC, LK, LR, LS, LT, LU, LV, MA, MD, MG, MK, MN, MW, MX, MZ, NI, NO, NZ, OM, PH, PL, PT, RO, RU, SC, SD, SE, SG, SK, SL, TJ, TM, TN, TR, TT, TZ, UA, UG, US, UZ, VC, VN, YU, ZA, ZM, ZW.

(84) Designated States *(regional)*: ARIPO patent (GH, GM, KE, LS, MW, MZ, SD, SL, SZ, TZ, UG, ZM, ZW), Eurasian patent (AM, AZ, BY, KG, KZ, MD, RU, TJ, TM), European patent (AT, BE, BG, CH, CY, CZ, DE, DK, EE, ES, FI, FR, GB, GR, HU, IE, IT, LU, MC, NL, PT, RO, SE, SI, SK, TR), OAPI patent (BF, BJ, CF, CG, CI, CM, GA, GN, GQ, GW, ML, MR, NE, SN, TD, TG).

[Continued on next page]

(54) Title: DEVICE FOR MOVING HANDICAPPED PEOPLE

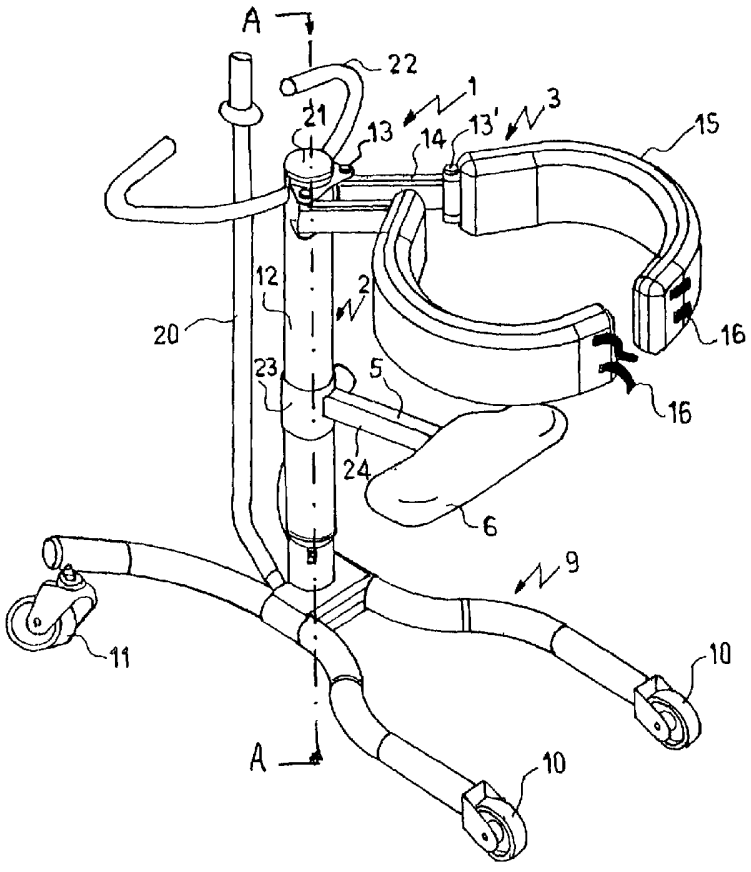

(57) Abstract: A mobilizing device for handicapped people comprises a supporting structure (2) having a fixed portion (8) and a mobile portion (12), means for holding (3) the user's body and means for lifting the holding means. The holding means are rigid means for the engagement and the support of the user's bust, and are translatable along the supporting structure with its mobile portion (12).

WO 03/096952 A2

Published:

— *without international search report and to be republished upon receipt of that report*

For two-letter codes and other abbreviations, refer to the "Guidance Notes on Codes and Abbreviations" appearing at the beginning of each regular issue of the PCT Gazette.

Title: "Device for moving handicapped people"

FIELD OF THE INVENTION

The present invention relates to a device for moving handicapped people; more particularly, the invention relates to a device for lifting and transporting people unable to walk. The transport of handicapped people, i.e. of people with mobility problems, in hospitals or at home, such as for instance their transport from bed to bathroom to carry out their physiological functions or the usual hygienic activities, as well as moving for example from a wheel-chair into a swimming-pool designed for rehabilitation, is a serious and deeply felt problem because several persons and/or suitable mechanical devices are required.

TECHNICAL BACKGROUND

The known devices for moving handicapped people generally include a supporting structure comprising an upright and a fixed arm located, at a given height, transversally with respect to the upright; besides, ropes or cables are provided, suitable to lift or lower a special sling wherein the body of the person to be mobilized is placed. Said ropes or cables are connected to the supporting structure by means of pulleys or similar sliding elements. This type of device is very bulky and for this reason, even if it is mounted on a trolley, it does not allow an easy transport of people with mobility problems, especially in small environments such as, for instance, houses.

Besides, the sling that encircles the person with mobility problems would not be easily applied to the areas of the limbs and the bust, and its presence is a remarkable obstacle during personal hygienic activity and dressing.

Mobilizing devices are also known that have an arm hinged to the supporting upright, so as to allow its upward rotation; a sling is

attached to the arm.

Such a device is described for example in WO 96/11658.

DE-U-2000 0380 discloses a similar device wherein two padded arms, rotatable around the respective axis, are mounted onto a bracket positioned at the extremity of a piston. In operation of the piston, the arms are rotated in vertical direction lifting or lowering them.

Such devices reduce only partially the bulk and do not solve the problems associated with the presence of the sling; besides, a possible oscillation of the person with mobility problems with respect to the anchoring point of the sling on the supporting arm, might cause the rollover of the device.

BRIEF SUMMARY OF THE INVENTION

Object of the present invention is to provide a mobilizing system for people with mobility problems, that is reliable, simple to use and economic to manufacture.

Another object of the present invention is to solve the problems addressed by the known technical background by means of providing a device for moving handicapped people, i.e. people with mobility problems, that is compact, light and easy to move.

Another object of the present invention is to provide a mobilizing device for handicapped people, wherein the system for holding the body of the handicapped person does not prevent the carrying out of personal hygiene and dressing operations.

These and other objects are achieved by the present invention that concerns a mobilizing device for handicapped people comprising a supporting structure having an axis substantially vertical to the ground, means for holding the body of the transported person and means for lifting said holding means, characterized in that said supporting structure comprises a fixed portion and a mobile portion movable

along said axis and in that said holding means are rigid means for the engagement and the support of the bust of the transported person, are mounted articulated on said mobile portion of the supporting structure and are translatable therewith. The mobile portion is raised and lowered along the supporting structure by means of lifting means, preferably composed of a hydraulic piston. In particular, the rigid means are rotatable around an axis, which is coincided or parallel to the axis of the supporting structure, and are translatable in a direction substantially orthogonal to the ground. The holding means are at least partially curved and support and engage the armpits and a part of the person's chest.

Preferably, each holding means comprises an articulated arm on the mobile part of the supporting structure and a curved portion mounted articulately on the arm. The arms comprise at least one rectilinear portion and at least one curved portion connected to each other and to the mobile portion of the supporting structure by means of a hinge having axis substantially parallel to the axis of the supporting structure.

According to a preferred aspect of the present invention, the mobilizing device comprises a resting element for the legs of the handicapped person. The resting element is fixed to the mobile portion of the supporting structure and it is movable with said portion and with the holding means of the bust.

Such a resting element allows to mobilize the person with mobility problems in a seated posture, without, contrary to what happens with traditional slings, blocking the legs and hindering the access to the groin portion. Personal hygiene and dressing operations are thus made possible. Besides, the presence of a support for the bust in the areas of the armpits and the chest and the presence of a support for the legs in the areas of the knees, allow to easily mobilize the person from a

chair to a sanitary fixture and vice-versa, as the rest of the thighs, the buttocks and a major portion of the back remains free.

According to a further preferred aspect of the present invention, the supporting structure is mounted on a trolley and is movable therewith.

According to a further preferred aspect of the present invention, the lifting means comprise a piston that can be activated by hand and/or electrically, connected to the cylindrical jacket and translatable in the inside of the structure.

A realization of this kind allows to markedly reduce the size of the mobilizing device, as said piston is incorporated in the supporting structure.

SHORT DESCRIPTION OF THE DRAWINGS

Further characteristics and advantages of the present invention will be clearer from the following description, made for illustrative purposes without limiting the scope of the invention, with reference to the attached drawings wherein:

- Figure 1 shows a perspective view of an embodiment of the device for moving people with mobility problems according to the present invention;
- Figure 2 shows a view of the mobilizing device according to Fig. 1 with the holding means in open and raised position;
- Figure 3 shows a schematic cross-sectional and partial view of the lifting device according to the present invention;
- Figure 4 shows a side view of the device for moving handicapped people during use,
- Figures 5 and 6 are schematic side views of another embodiment of the device according to the present invention for use in baths and swimming-pools;
- Figure 7 is a partial view of the lowest portion of the device

according to Figures 5 and 6; and

- Figure 8 is a partial top view of the device according to Figures 5 and 6.

EMBODIMENTS OF THE INVENTION

Figure 1 shows a mobilizing device 1 for handicapped people, comprising a mobile supporting structure 2, rigid holding means 3 and means 4 for lifting said holding means 3. The supporting structure 2 has an axis A-A substantially vertical to the ground. The term "substantially vertical" means that the axis A-A forms an angle of 90° ± 10°, namely an angle comprised within the range from 80° to100°. Means 3 engage and support under the armpits the bust of the person with mobility problems, and has a curved portion to engage and support the armpits and a part of the person's chest.

The lifting means translate the holding means 3 along the supporting structure 2 in a direction substantially vertical to the ground and parallel to the axis A-A of the supporting structure 2. In this manner, by encircling the person with mobility problems in the areas of bust and armpits, it is possible to put him(her) on his(her) feet, mechanically simulating the lifting action carried out by a person who seizes the person with mobility problems at the height of the bust and lifts said handicapped person by hand.

The mobilizing device has also a resting element 5 that during the use is engaged with the back portion of the legs of the person, near the knees, in order to allow the transport of said persons in a seated posture. To this end, the resting element 5 protrudes less than the supporting structure 2 of the holding means 3, namely it is not axially aligned with said supporting structure.

The resting element is generally formed of a rigid piece 6, covered with flexible material, connected to the supporting structure 2 of the

device.

As can be better seen in Figures 2, 3, the supporting structure 2 is provided with a vertical cylindrical element 8 which is externally coupled to the cylindrical jacket 12 being coaxial to the cylindric element 8.

The jacket 12 forms the mobile portion of the supporting structure 2 and is translatable along the axis A-A of structure 2 between two portions, namely a lower one and an upper one. The holding means 3 are mounted articulated, i.e. pivotally on a hinge or pin on the mobile portion 12.

In particular, according to the embodiment of Figures 1, 2 and 4, the holding means 3 are comprising two articulated arms hinged in 13, through a bolt-coupling known *per se*, to the upper end of the cylindrical jacket 12. According to the embodiment of Figures 5-8, the holding means are identical, namely they comprise rectilinear arms 14 and curved arms 15; in this embodiment the arms are mounted onto an extension or prolongation 25 of the mobile portion constituted by the jacket 12. The extension 25 is shaped to a reversed "L" form and its function is clarified hereinafter. In all embodiments, therefore, the holding means 3 are mounted (directly or indirectly) onto the mobile portion 12.

The rotation axis of the articulated arms, with respect to the external jacket 12, is substantially vertical to the ground and parallel to the axis A-A of structure 2.

Each articulated arm is made up by a rectilinear portion 14 and an arched portion 15, hinged together in 13', with a rotation axis, which is substantially vertical with respect to the ground and substantially parallel to the axis in 13.

Both arched portions 15 have a conformation suitable to encircle the

body of the person with mobility problems in the areas of the bust, and the presence of hinges or pins 13' between the straight 14 and arched 15 portions (besides the hinges 13) allows the adjustment of the holding means 3 to different persons, independently on the build, imparting the mobilizing device 1 a great flexibility in use.

In the areas of the untied ends, the arched portions 15 have closing means 16, such as Velcro strips or buckled strips, to block in a closed position, i.e., around the bust of the person, both arched portions 15 that are thereby tied with one another. In order to give a greater comfort, the arched portions 15 of the holding means 3 and the resting element 5 are padded with a flexible material known *per se* and used for such purposes.

In their turn, the curved portions 15 may be formed by a plurality of parts 15a, each linked to the other by means of hinges 26 (Fig. 2) for a better adjustment to the user's body. The hinges 26 have axis substantially parallel to that of the hinges 13 and 13'.

In order to maintain the portions 15a in a close-fitting position to the user's body, the Velcro strips 16a are much longer than that shown on Fig.1.

Preferably, the lifting means are a single effect hydraulic cylinder. As can be seen in Figure 3, they comprise a piston 17 connected in the upper part to a cylindrical jacket 12 and a plunger 18 mobile within the cylindrical element 8 which, for this reason, is hermetically sealed. A pump 19, located at the base of the cylindrical element 8, feeds a fluid, for instance oil, into the cylindrical element 8, causing the expansion of plunger 18 of piston 17 and lifts consequently jacket 12 and the holding 3 and supporting 24 means tied thereto. A manual lever 20 activates pump 19.

In order to lower the holding means 3, the lifting means are provided

with an air valve (not shown), that allows the discharge of the fluid from the cylindrical element 8 and, thereby, the lowering of the cylindrical jacket 12.

The air valve is activated by hand with a push-button 21 that, according to the embodiment of Figs. 1 and 2, is located in the areas of the upper end of the jacket 12.

Such composition and arrangement of the lifting means 4 markedly reduces the overall dimensions, but obviously any lifting means may be used to lift the cylindrical jacket 12, for instance an actuator, a worm or a chain system, without falling outside the protection scope of the present invention.

Besides, it would be also possible, always for this purpose, to provide the piston with an electric drive system or to differently arrange the elements. In an alternative version, for instance, piston 17 is connected to the base of the cylindrical element 8 and plunger 18 is upwards oriented and translates in a special expansion chamber located in the inside of the cylindrical jacket 12.

Figures 1, 2 and 4 show an embodiment wherein the supporting structure 2, which supports at different heights the holding means and the resting means, is mounted on a trolley provided with four wheels 10, 11 for moving the device.

In details, the two front wheels 10 are fixed, while the two rear wheels 11 are pivotable and confer manageability to the device. The distance between the front wheels 10 and their encumbrance in height are such to allow the insertion of the front portion of the carriage 9 internally between the legs of any wheel-chair for persons with mobility problems and externally to the normal sanitary devices.

In the areas of the upper end of the supporting structure, a handlebar 22 is also present for the movement of device 1; for this purpose,

device 1 might be provided with a small motor, such as an electric motor allowing the self-propelled movement of device 1.

Anchored in an adjustable manner to the supporting jacket, or mobile portion 12, as already mentioned, a resting element 5 is included, such as a padded crossbar 6, whereon the rear part of the thighs of the person with mobility problems can rest (Fig. 4), allowing a more comfortable transport of said person in a seated posture.

In order to render clearer the Figure, resting element 5 is not shown on Fig. 2.

The adjustment of the resting element 5 with respect to the supporting structure 2 is obtained by known means, such as a collar 23 placed on the cylindrical jacket 12, that allows the vertical translation of the resting element 5, and a support 24 of a telescopic type located between the crosspiece and the collar, to allow the adaptation of the various "builds" or "sizes" of the transported persons.

The collar also allows the rotation of the resting device around the cylindrical jacket 12 in a plane parallel to the ground. In this way, without possible obstructions caused by the presence in a front position of the resting element, it is possible to utilize the mobilizing device to lift the person with mobility problems in a substantially erect position.

Thanks to its limited size and mobilizing easiness, the mobilizing device subject matter of the present invention shows also a great easiness of use and is suitable to be employed in small environments such as, for instance, houses.

In particular, the mobilizing device is used for lifting people with mobility problems from the bed to any other resting surfaces where they may rest in a seated posture, and to transport them, in substantially the same posture, wherever it is necessary. For this

purpose, the mobilizing device subject matter of the present invention is positioned frontally with respect to the person with mobility problems, seated in such a manner that the bust, in the areas of the armpits, can be encircled, when closed, by the arched portions 15 of the articulated arms, and that it is possible to lean his (her) legs, in the areas of the knees, on the resting element 5. Now, by activating the piston, it is possible to slightly lift the person with mobility problems, and to transport him (her) in a seated posture wherever it is necessary.

Figures 5-8 refer to an embodiment of the invention, which is used to transfer persons from transporting means, such as wheel-chair 29, into a swimming-pool 28 for example during rehabilitation therapies. The same reference numbers above mentioned are used in Figures 5-8 to indicate the same elements of the device according to the invention.

This fixed embodiment comprises a jacket 12 (longer than that shown in Figures 1 and 2) which constitutes the mobile part of the supporting structure 2 and comprises a prolongation or extension 25 having a reversed "L" form and extending downwards with its longer arm 27. The holding means 3 is similar to that disclosed hereinbefore and comprises rectilinear portions 14 and curved portions 15 with hinges or pins 13 and 13' (and eventually 26); the means 3 is mounted on arm 27, holding means 24 is mounted on arm 27, too.

The jacket 12 or at least a part thereof, in the areas of extension 25, is pivotable around axis A-A with an angle sufficient to move the user from the chair 29 into the pool or tank 28 (Figures 5 and 6).

The cylinder 8, or the fixed portion of the supporting structure, is integral with a base 30 that is fastened in a known way, for example with balts 31, to the edge of the bath 28.

The device works in a similar manner to that disclosed for embodiment according to Figures 1, 2 and 4. The user is positioned on holding

means 24 with the bust kept by means 3 and his legs are placed on support 26; then mobile part 12 is moved upwards, for example thanks to the above disclosed piston (Figure 3), actuated of lever 20.

Thereafter, extension 25 is rotated to a position above tank or pool 28; the jacket 12 (and therewith also extension 25) is lowered for example, by means of above cited air valve.

It is to be noted that in this embodiment the jacket or the mobile part 12 is normally in lifted position (Figure 5) and that the lowered position is the "working" one (Figure 6).

CLAIMS

1. A mobilizing device for handicapped people, comprising a mobile supporting structure (2) having an axis (A-A) substantially vertical to the ground, means for holding (3) the body of the transported person and means for lifting said holding means, characterized in that said supporting structure (2) comprises a fixed portion (8) and a mobile portion (12) that is movable along said axis (A-A) and in that said holding means are rigid means for engaging and supporting the bust of the transported person, are mounted articulated on said mobile portion (12) of said supporting structure (2) and are translatable with said mobile portion (12).
2. The mobilizing device according to claim 1, wherein said holding means are pivotable around at least one axis coincident or substantially parallel to said axis (A-A) of the supporting structure (2).
3. The mobilizing device according to claim 1 or 2, further comprising a resting element (24) for the user's legs, which is fixed to said mobile portion (12) of the supporting structure (2).
4. The mobilizing device according to claim 2 or 3, wherein said holding means (3) comprise two articulated arms, each arm being provided with at least one rectilinear portion (14) and at least one arched portion (15, 15a), said rectilinear and arched portions being connected to each other and to said mobile portion (12) of the supporting structure (2) by means of hinges (13, 13', 26) having axis substantially parallel to said axis (A-A) of the supporting structure.
5. The mobilizing device according to claim 4, wherein said holding means (3) comprise fastening means (16) to fasten said arched portions around the user's bust.
6. The mobilizing device according to any previous claim, wherein in

that said supporting structure is vertically mounted on a trolley.

7. The mobilizing device according to any previous claim, wherein said holding means comprise a piston, said piston being connected to the mobile portion (12) and translatable within said fixed portion of the bearing structure (2).
8. The mobilizing device according to any previous claim, wherein said mobile portion (12) of the supporting structure (2) comprises an extension (25) to which said holding means (3) are fixed.
9. The mobilizing device according to any previous claim, wherein said resting element comprises adjusting means to adjust its position with respect to the holding means.

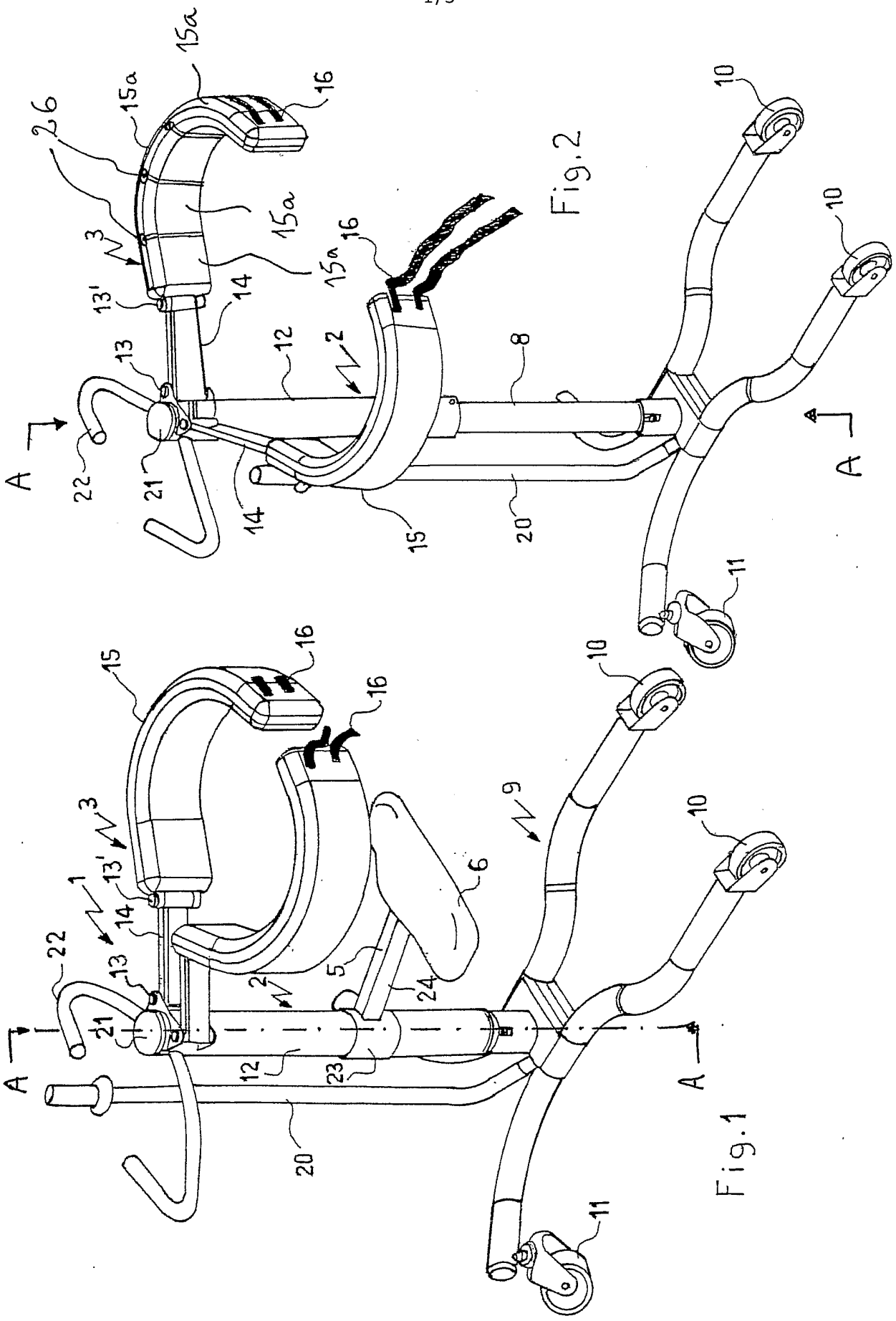

Fig.1

Fig.2

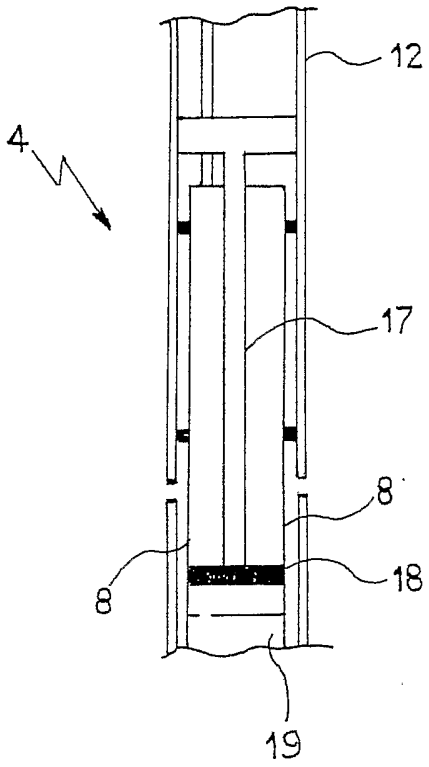

Fig.3

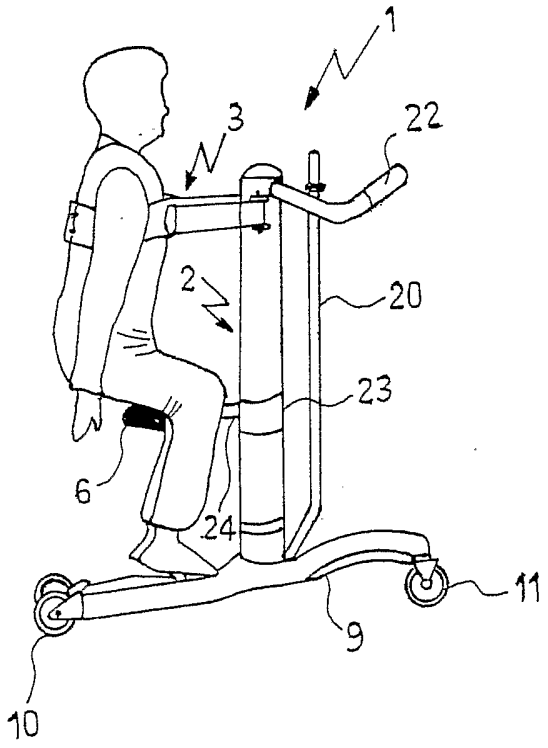

Fig. 4

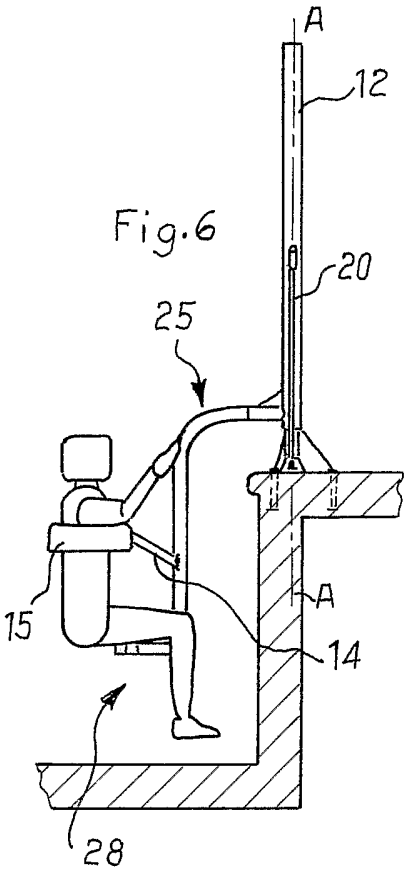

Fig.6

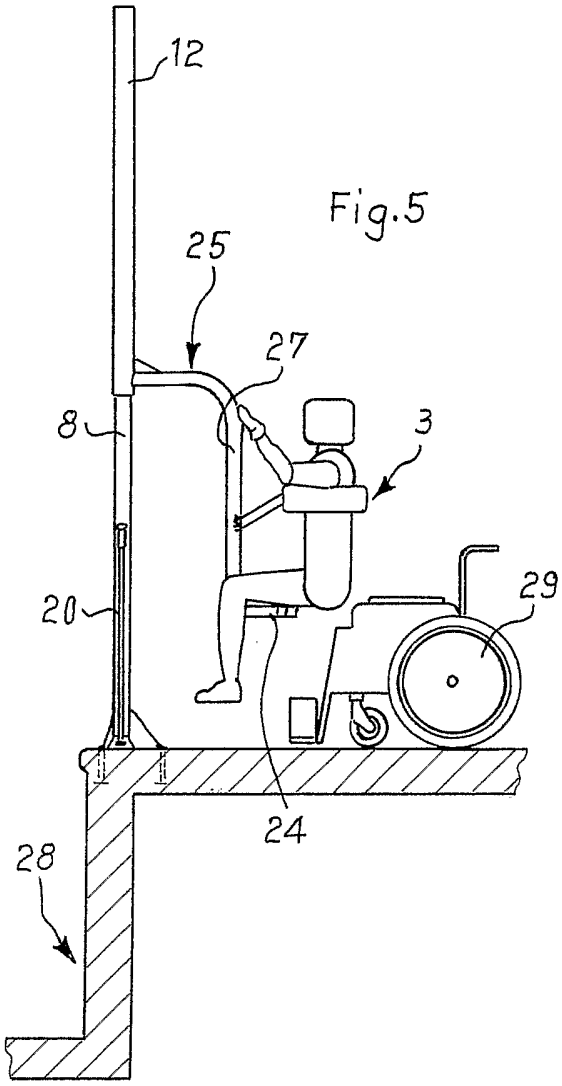

Fig.5

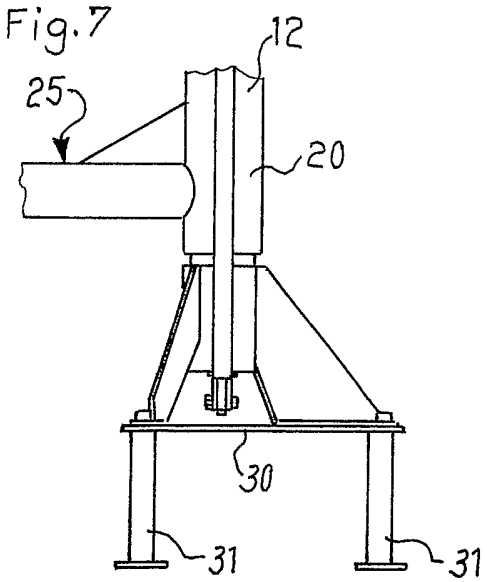

Fig.7

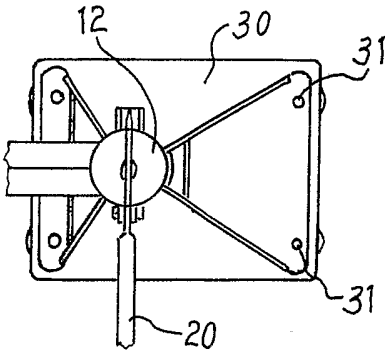

Fig.8