Sept. 25, 1962 P. C. KESLING 3,055,110

BUCCAL ATTACHMENT

Filed Aug. 8, 1960

2 Sheets-Sheet 1

FIG. 1

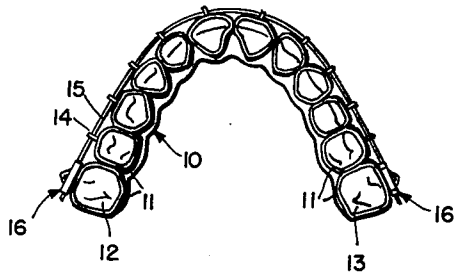

FIG. 2

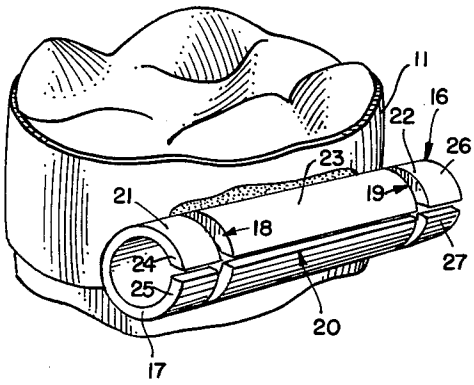

FIG. 3

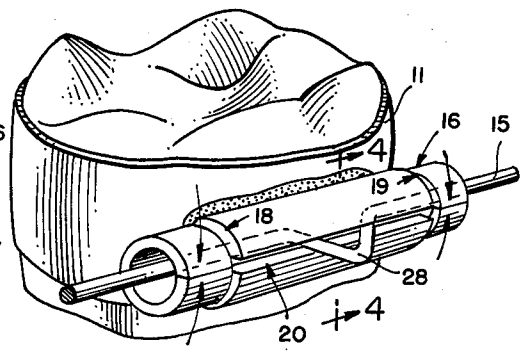

FIG. 4

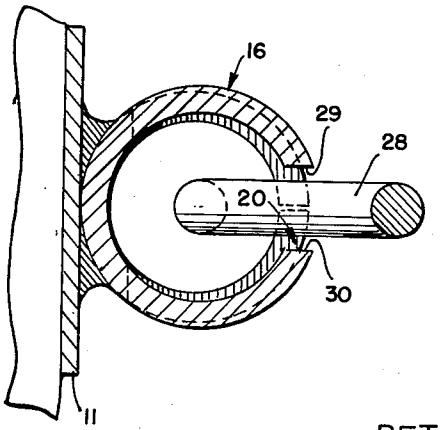

INVENTOR:
PETER C. KESLING

BY
Marzall, Johnston, Cooke & Root

ATT'YS

Sept. 25, 1962 P. C. KESLING 3,055,110

BUCCAL ATTACHMENT

Filed Aug. 8, 1960

2 Sheets-Sheet 2

FIG. 5

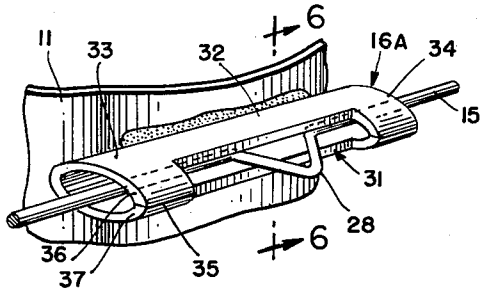

FIG. 6

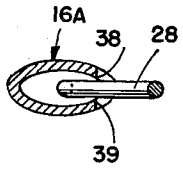

FIG. 7

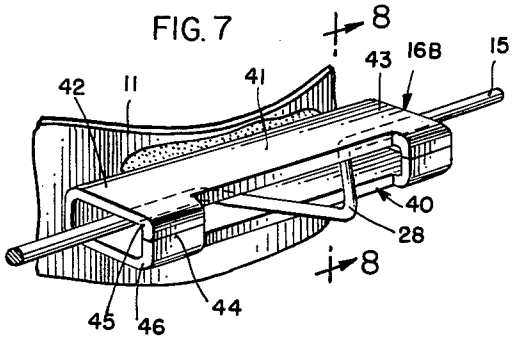

FIG. 8

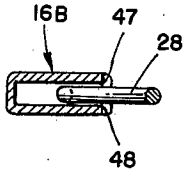

FIG. 9

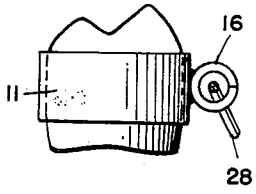

FIG. 10

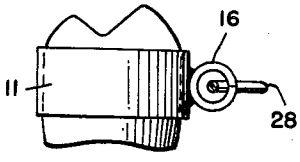

FIG. 11

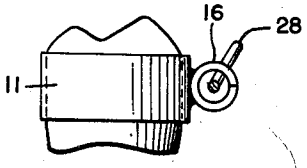

INVENTOR:
PETER C. KESLING

BY
Mayell, Johnston, Cook & Root

ATT'YS

United States Patent Office

3,055,110

Patented Sept. 25, 1962

3,055,110

BUCCAL ATTACHMENT

Peter C. Kesling, Green Acres, La Porte, Ind.

Filed Aug. 8, 1960, Ser. No. 48,283
4 Claims. (Cl. 32—14)

This invention relates to apparatus employed in orthodontics, and more particularly to buccal attachments, and still more particularly to the combination of a buccal attachment and an arch wire for controlling torque on the anchor tooth.

The practice of orthodontics is primarily concerned with the positioning of teeth, wherein an arch wire is connected to selected teeth of a dental arch. The opposite or distal ends of the wire are normally connected to anchor teeth. Generally, the anchor teeth are molars near the back of the dental arch. Inasmuch as the distal ends of an arch wire are connected to anchor teeth, forces are transmitted through the arch wire to and from these teeth, some forces of which may be undesirable and tend to malposition the anchor teeth. Further, it is desirable to prevent rotation of the arch wire, as it is also desirable to prevent rotation of an anchor tooth about the arch wire.

Accordingly, it is an object of this invention to provide a new and improved buccal attachment for retaining the distal ends of an arch wire.

Another object of this invention resides in the provision of a buccal attachment adapted to be secured to an anchor tooth for receiving a distal end of an arch wire, wherein the attachment may be easily manipulated by an orthodontist.

A further object of this invention is in the provision of a buccal attachment in combination with means provided on the arch wire for controlling the torque on a tooth supporting the buccal attachment.

A still further object of this invention is to provide a buccal attachment for accepting the distal end of an arch wire wherein the attachment offers complete protection to the arch wire from forces of chewing or occlusion.

Another object of this invention is in the provision of a buccal attachment adapted to be secured to an anchor tooth of a dental arch and to coact with an offset portion on an arch wire for controlling the torque on the anchor tooth.

Other objects, features and advantages of the invention will be apparent from the following detailed disclosure, taken in conjunction with the accompanying sheets of drawings, wherein like reference numerals refer to like parts, in which:

FIG. 1 is a plan view of a dental arch having an arch wire connected to the teeth of the dental arch and buccal attachments in accordance with the invention arranged on the anchor teeth of the arch;

FIG. 2 is an enlarged perspective view of the buccal attachment of the invention as mounted on a tooth band carried by an anchor tooth and in condition to have the distal end of an arch wire mounted thereon;

FIG. 3 is a perspective view similar to that of FIG. 2 but illustrating the distal end of an arch wire as received by and locked to the attachment.

FIG. 4 is a greatly enlarged transverse sectional view taken through the buccal attachment substantially along line 4—4 of FIG. 3;

FIG. 5 is a perspective view of a modified buccal attachment constructed in accordance with the invention;

FIG. 6 is a transverse sectional view taken through the attachment of FIG. 5 substantially along line 6—6 of FIG. 5;

FIG. 7 is a perspective view of another modified attachment constructed in accordance with the invention.

FIG. 8 is a transverse sectional view taken through the attachment of FIG. 7 and substantially along line 8—8 of FIG. 7.

FIG. 9 is a more or less schematic end view of an attachment similar to that illustrated in FIGS. 1–4 and illustrating the offset portion of the wire as extending gingivally;

FIG. 10 is a view similar to FIG. 9 but illustrating the offset portion of the wire as extending bucally; and

FIG. 11 is a view similar to that of FIG. 9 but illustrating the offset portion of the wire as extending occlusally.

Referring now to the drawings, and particularly to FIG. 1, a dental arch 10 includes a plurality of teeth. Each of the teeth has a conventional type of band 11 secured thereto in any suitable manner such as by use of cement. Except for the rear molars 12 and 13, all of the bands are provided with wire receiving brackets 14 on the labial or buccal side thereof having connected thereto an arch wire 15. Buccal attachments 16 constructed in accordance with the invention are secured to the bands 11 of the rear molars for receiving the distal ends of the arch wire 15. Thus, the rear molars become the anchor teeth for the arch wire system.

The buccal attachment 16 of the invention is suitably connected to the tooth band 11 such as by spot welding and soldering. The attachment comprises an elongated tubular member 17 having a transversely extending slot 18 at the mesial end of the attachment and a transversely extending slot 19 at the distal end of the attachment. The tubular member 17 extends mesial-distally and is also provided with an axially extending slot 20 intersecting with the transverse slots 18 and 19.

The slots 18 and 19 define a mesial end section 21, a distal end section 22 and a center slide section 23. As may be seen most clearly in FIG. 4, the slots 18 and 19 extend through a greater portion of the tubular member and coact with the mesial-distally extending slot 20 to define on the end sections ears 24, 25, 26 and 27. Upon receiving the arch wire, the ears 24, 25 and 26, 27 are squeezed together to eliminate the slot in the area of the end sections and thereby form closed ends to lock the arch wire 15 within the confines of the tubular member 17, as shown in FIG. 3. When the end sections are closed, they define slightly smaller sections than the center section 23. The mesial end section 21 and the distal end section 22 of the tubular member may then be opened or closed as required to remove and replace the arch wire.

As seen in FIG. 3, the arch wire is provided with an offset section 28 slidably receivable in the slot 20 of the center slide section 23 and slightly protruding from the outer surface of the attachment. The offset section 28 may be of any desired configuration capable of being received in the slot 20. The upper face of the slot, identified by the numeral 29, FIG. 4, limits the upward or occlusal movement of the offset section, while the lower face 30 of the slot limits downward or gingival movement of said section 28. The width of the slot 20 is slightly greater than the thickness of the arch wire 15 to permit the offset section to slide freely in either direction until it is stopped against one or the other of the closed end sections 21 and 22. The position of the attachment on the tooth band 11 and the tooth can be such that the slot is directed buccally as shown in FIGS. 1–4 and 10, gingivally as shown in FIG. 9, or occlusally as shown in FIG. 11. Thus, the arch wire 15 having its distal ends received by buccal attachments on the anchor teeth is prevented from rotating relative to the anchor teeth, or it may be stated that the anchor teeth are prevented from rotating about the wire because of the restricting action of the buccal attachments on both

sides of the offset section in the arch wire, thereby controlling the torque of the anchor teeth.

The buccal attachments of FIGS. 1–4 is circular in cross-section and may be made from a length of circular tubing by slitting it lenghwise and then at right angles at each end to form the axially extending and transversely extending slots.

A modified form of the invention is shown in FIGS. 5 and 6, wherein the tubular member is oval in cross-sectional configuration and generally designated by the numeral **16A**. In this embodiment, a part of the tubular member is removed along one of the narrow ends, by milling or other suitable methods, to define a cut-away section or notch **31**. The cut-away section **31** thereby defines a center slide section **32**, a mesial end section **33** and a distal end section **34**. The mesial end section **33** is slit longitudinally at **35** to allow the ears **36** and **37** to be bent apart or together to open and close the mesial end of the member for removing and replacing the arch wire **15**. By removing the cut-away portion **31**, an upper edge **38** is defined, FIG. 6, for limiting the upward or occlusal movement of the offset section **28** and a lower edge **39** is provided for limiting the downward or gingival movement of the offset section. As in the embodiments of FIGS. 1–4, the arch wire is provided with a like offset portion for coacting with the buccal attachment to prevent relative rotation therebetween.

Another embodiment of the invention is disclosed in FIGS. 7 and 8 and generally designated by the numeral **16B**, and differs from the embodiment of FIGS. 5 and 6 in that the tubular member is substantially rectangular in cross-sectional configuration. Again, a cut-away or notched section **40** is provided to receive the offset section **28** of the arch wire, and the cut-away section thereby defines a center slide section **41**, a mesial end section **42** and a distal end section **43**. As in the embodiment of FIGS. 5 and 6, only the mesial end **42** is slit along the buccal side at **44** thereby defining ears **45** and **46** that may be opened or closed to permit removal and replacement of the arch wire. It can be appreciated that the very distal end of the arch wire is first inserted in the closed distal end section **43** and then the area of the arch wire mesial to the offset portion may be slipped through the opened mesial end section and in proper position. Then closing of the mesial end section locks the arch wire in position and effectively connects it to an anchor tooth. Upper and lower control faces **47** and **48**, FIG. 8, serve to restrict movement of the offset section **28** of the arch wire.

It will be understood that modifications and variations may be effected without departing from the scope of the novel concepts of the present invention, but it is understood that this application is to be limited only by the scope of the appended claims.

The invention is hereby claimed as follows:

1. In combination with an arch wire, a buccal attachment adapted to be mounted buccally of an anchor tooth, said attachment comprising an elongated mesial-distally extending tubular member adapted to slidably receive the distal end of the arch wire, said member having a pair of end sections and a center slide section, a mesial-distally extending slot in said center section, one of said end sections being split mesial-distally to permit same to be opened and closed for passing the arch wire, and an offset portion in said arch wire slidably received by said slot in the center section.

2. The combination of claim 1, wherein the tubular member has a circular cross-section.

3. The combination of claim 1, wherein the tubular member has a rectangular cross-section.

4. The combination of claim 1, wherein the tubular member has an oval cross-section.

References Cited in the file of this patent

UNITED STATES PATENTS

1,398,761	Angle et al.	Nov. 29, 1921
1,670,347	Gordon	May 22, 1928