KNITTING METHODS AND MACHINES

Filed July 10, 1963 4 Sheets-Sheet 1

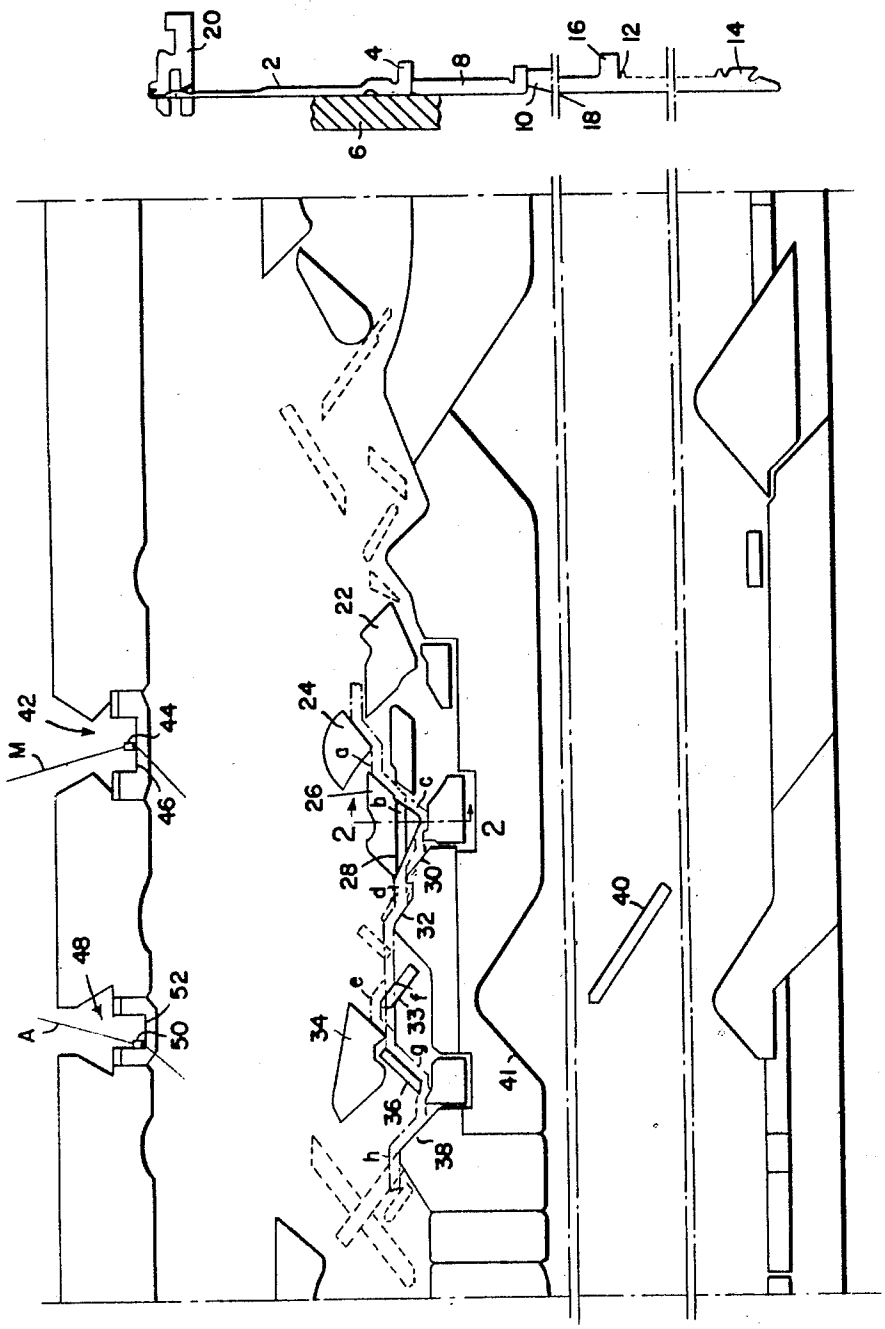

FIG. 1.

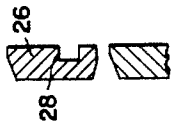

FIG. 2.

INVENTOR.
JOHN J. MILLAR
BY
Busser, Smith & Hardy
ATTORNEYS

KNITTING METHODS AND MACHINES

Filed July 10, 1963 4 Sheets-Sheet 2

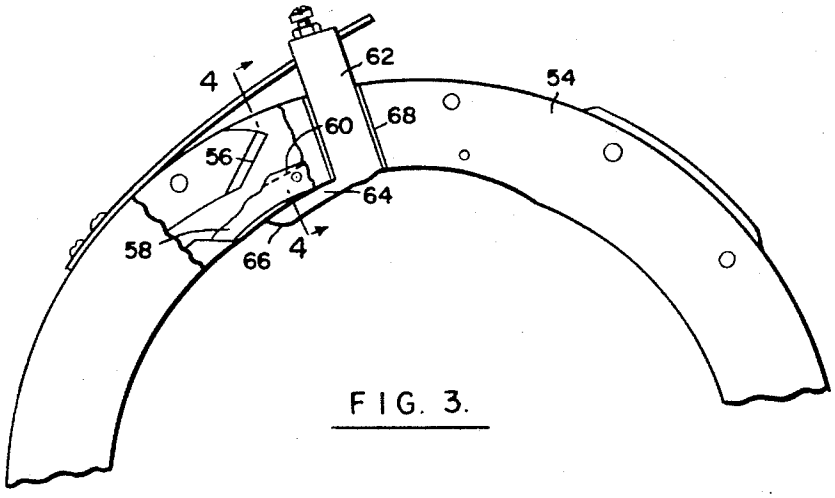

FIG. 3.

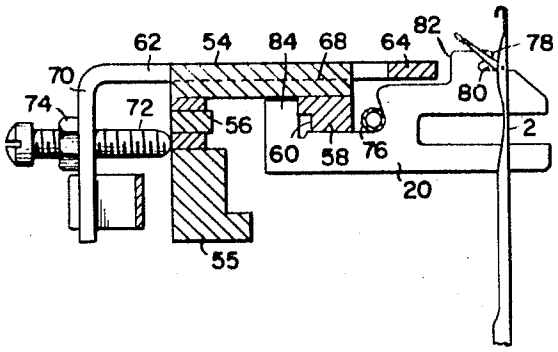

FIG. 4.

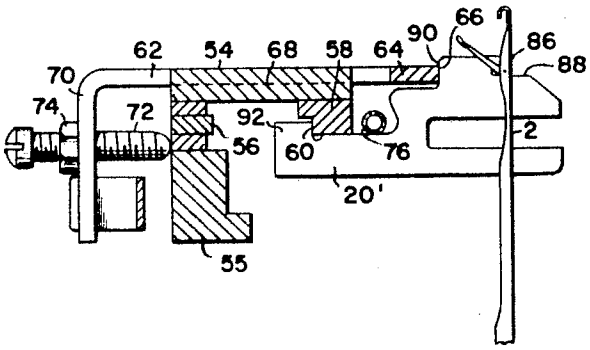

FIG. 5.

INVENTOR.
JOHN J. MILLAR
BY
Burns, Smith & Hardy
ATTORNEYS

KNITTING METHODS AND MACHINES

Filed July 10, 1963 4 Sheets-Sheet 3

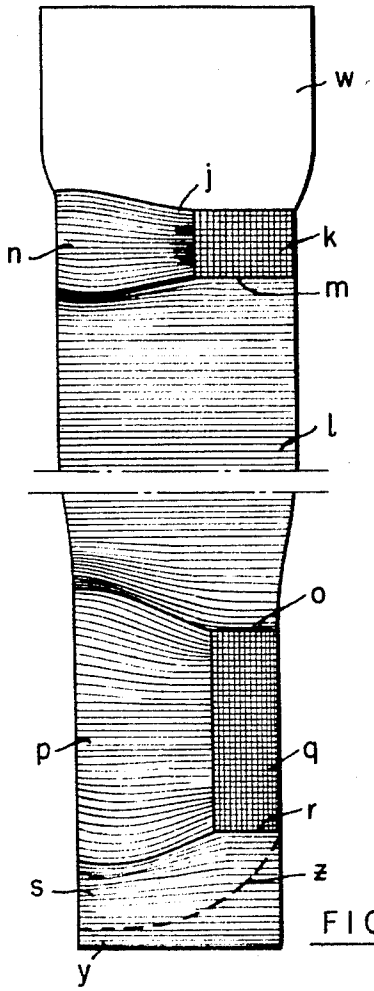

FIG. 7.

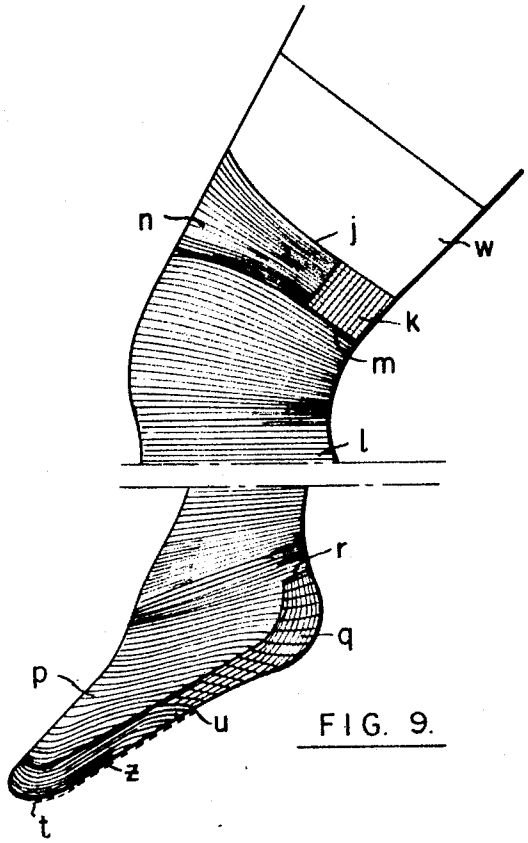

FIG. 9.

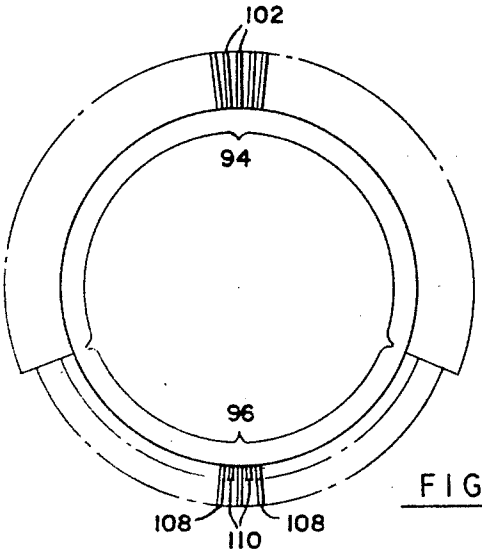

FIG. 6.

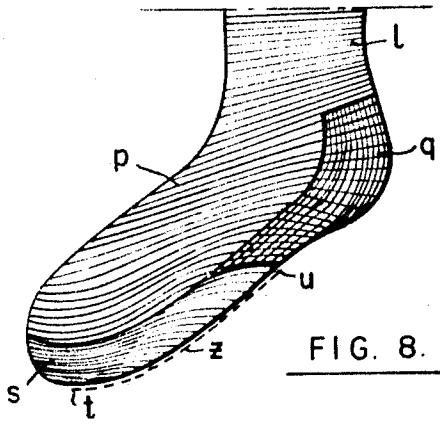

FIG. 8.

INVENTOR.
JOHN J. MILLAR
BY
Burns, Smith & Hardy
ATTORNEYS

KNITTING METHODS AND MACHINES

Filed July 10, 1963 4 Sheets-Sheet 4

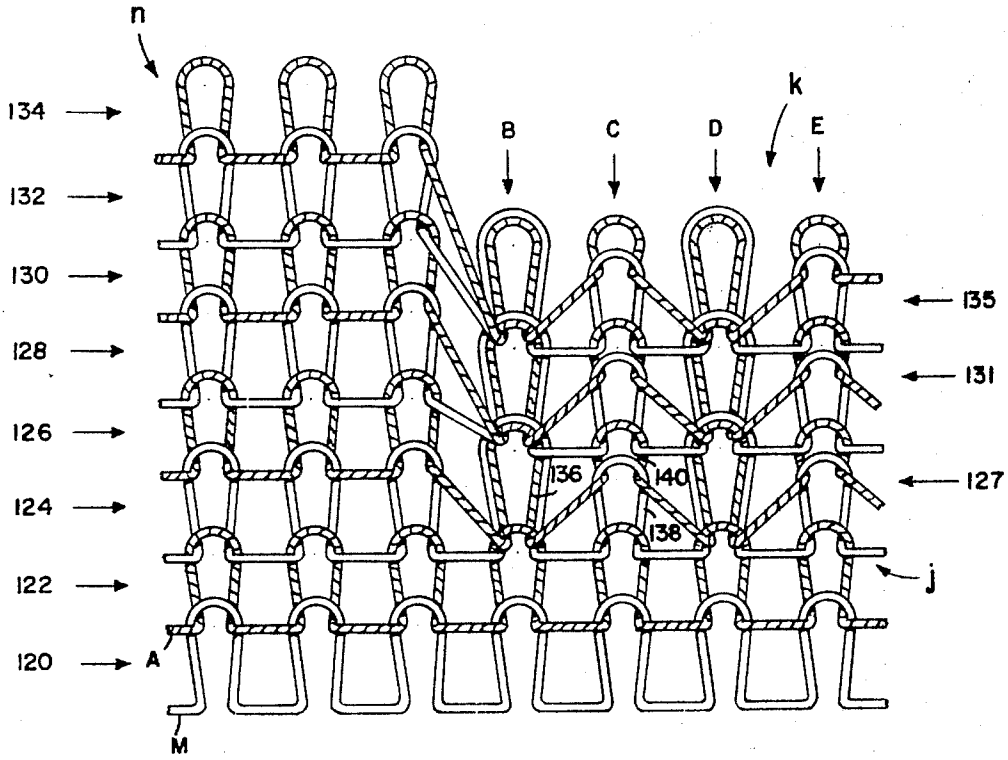

FIG. 10.

INVENTOR.
JOHN J. MILLAR
BY
Brown, Smith, Hardy
ATTORNEYS

United States Patent Office

3,457,735

Patented July 29, 1969

3,457,735

KNITTING METHODS AND MACHINES

John J. Millar, Laconia, N.H., assignor to Scott & Williams, Incorporated, Laconia, N.H., a corporation of Massachusetts

Filed July 10, 1963, Ser. No. 294,075
Int. Cl. D04b 9/46
U.S. Cl. 66—42 4 Claims

ABSTRACT OF THE DISCLOSURE

A circular knitting machine, and method carried out thereby, are provided in which the knitting machine is of a two-feed type and involves control of needles and cooperating elements during the formation of a circumferential multiple course band of knitting to provide two coursewise related areas to cause needles to take yarns at both of two feed points and draw single yarn stitches of the yarns to produce one of said areas, to cause certain needles to take yarns at both of said feed points and draw single yarn stitches of the yarns forming parts of the second of said areas, and to cause needles interspersed with said certain needles to take yarns at both of said feed points and draw plain stitches, each of which contains yarns from both of said feed points, forming parts of said second area, so that said second area includes in a round of knitting interspersed stitch structures of the two types mentioned.

This invention relates to knitting methods and machines and products thereof, the products being primarily ladies' hosiery.

The object of the present invention may be stated broadly to be the formation of fabric areas in circular knitting which are more extensible walewise than adjacent circumferentially related areas to provide extensibility of portions of stockings. The objects may be best made clear by citing two situations to which the invention is particularly applicable.

First is the matter of producing a ladies' stocking giving rise to relief of the strain which is normally imposed by the bending of the knee of the wearer. Circular knit ladies' stockings at present are essentially tubes and in the portion from the welt to the heel region are produced as such with modification by changes of stitch length to provide some shaping which is then accentuated and set by boarding operations. Nevertheless, as worn, the upper portion of the stocking is essentially uniform throughout any circumference and consequently when worn and drawn up tightly by garters the flexing of the knee produces a tightening over the knee with relative slackening at the rear. In accordance with the present invention, the stocking is knitted with a greater walewise length, for a given number of courses, at the front thereof as compared with the rear so that less stress is imparted walewise to the front portion of the stocking as the knee is flexed. The knitting structure for producing this is not produced at the knee but preferably where it will not show as, for example, in the general location of the so-called conventional shadow welt beneath the welt proper of the stocking. Though so located, it provides the extra fabric for the relief of tension or stress as the knee is flexed. In accordance with the invention, the front of the special region is knit in conventional two-feed fashion, while the rear is knit with two feed wales interspersed with wales of loops which individually contain yarn from both feeds, these being produced by delayed cast off of loops from one of a pair of feeds. So far as this aspect of the invention is concerned, the other portions of the stocking may be conventionally knit, and the stocking may, for

example, be provided with the usual heel and toe pockets produced by reciprocatory knitting.

A second use of the invention has to do with stockings which are knit by continuous rotary knitting forming tubes which vary from uniform cylinders essentially only in variations of diameter produced by the changing of stitch size and/or by the incorporation of reinforced areas. Stockings are produced from tubes so knit by closing ends of the tubes by stitching with trimming off of excess material. In such stockings the sewed seam is located lengthwise below the foot. By boarding with considerable stretch of the fabric heel and toe pockets are produced, though solely by distortion of the fabric, the distortions being effectively permanent by reason of the heat setting of thermoplastic yarns such as nylon. Reinforcement of the heel, sole and toe regions is sometimes produced by introducing reinforcing yarn in partial courses, floats being cut out by a separate operation.

The stockings as last produced generally have the objection that the toe end of the seam may appear in front of the toes or even thereabove unless the boarding is carried out to displace this end of the seam below the toes. But such boarding involves undue stretching of the instep portion of the stocking.

In accordance with the present invention, the same type of stitch structure as previously mentioned is provided to form the foot portion of the stocking. The fabric which will form the instep is relatively slack and hence when the boarding is carried out this fabric may be pulled freely forwardly and downwardly around the toe region with resultant location of the forward end of the longitudinal seam well under the toe portion. The slack also relieves the stresses which are involved in the boarding in production of the heel portion of the stocking. Furthermore, there is a concentration of yarn by reason of the double thread loops giving rise to a denser fabric in the heel and sole portions of the stocking serving better to withstand wear. The reinforcement thus provided does not necessarily include the incorporation of extra yarn in partial courses and hence there may be avoided the trimming of floats.

The objects of the invention have to do with the foregoing and, along with more detailed objects, will become apparent from the following description, read in conjunction with the accompanying drawings, in which:

FIGURE 1 is a developed view of needle and jack operating cams and other elements provided in accordance with the invention, there being shown, and described hereafter, only such elements as take part in operations in accordance with the invention, other elements being omitted or only sketchily shown, there being also indicated at the right of this figure various of the elements rotating with the needle cylinder;

FIGURE 2 is a fragmentary section taken on the axial plane indicated at 2—2 in FIGURE 1;

FIGURE 3 is a plan view of the sinker cap of the machine, partially broken away to show sinker controlling cams;

FIGURE 4 is an axial section taken on the plane indicated at 4—4 in FIGURE 3 and showing operation involving an ordinary sinker;

FIGURE 5 is a section on the same plane but showing operation of a special sinker;

FIGURE 6 is a diagram illustrating the arrangement of needle butts;

FIGURE 7 is a conventionalized eleva tion of a stocking tube as produced on the machine in accordance with the invention;

FIGURE 8 is a diagrammatic elevation of a completed stocking formed from the tube of FIGURE 7 as it appears after heat-setting on a preboarding form;

FIGURE 9 illustrates the stocking as it appears when worn; and

FIGURE 10 is a diagram illustrating in a formalized fashion the stitch structure involved in the special areas provided in accordance with the invention, the diagram showing the stocking as viewed from the inside thereof.

Referring first to FIGURE 1, there are shown at the right thereof a conventional needle **2** provided with a butt **4**, the needle cylinder **6** provided with slots in which the needle move, an intermediate jack **8** and a pattern jack **10**, the jacks being located in the cylinder slots beneath their respective needles. As pointed out above, the invention may be applied to the formation of two portions of a stocking and, so far as the first portion is concerned, i.e., the special structure adjacent to the welt, the stocking might be formed by both rotary and reciprocatory knitting, the latter being for the formation of heel and toe pockets. The camming which will be described is shown as consistent with knitting by reciprocatory operation. However, for consistency of description, stress will be particularly given to the knitting of a stocking by rotary knitting throughout, this merely involving reduced functioning or nonfunctioning of some of the machine parts. The invention is, of course, applicable either to machines in which the cylinder rotates and/or reciprocates or to machines in which the cylinder is stationary and the operating cams rotate and/or reciprocate. The butts **4** of the needles are differentiated in length as will be more fully brought out hereafter. The pattern jacks **10** are generally conventional and are provided with the selectively removable butts **12** and the lower butts **14** which may take part in the formation of patterns in conventional fashion which need not be described. Butts **16** may also be provided on certain of the jacks either for patterning or for other special operations such as the avoidance of eyelets during yarn changes as set forth, for example, in the application of John J. Millar and John A. Currier, Ser. No. 165,379, filed Jan. 10, 1962, now Patent No. 3,260,072. Each pattern jack **10** is of the usual pivoted type provided with a fulcrum **18**.

Sinkers of the type indicated at **20** cooperate with the needles in the usual fashion, but the machine is also provided with special sinkers **20'** alternating with the conventional sinkers **20** in the arrangement about the machine, the special sinkers being referred to in greater detail hereafter.

The camming of the machine is, except for minor changes, conventional and need not be described in full detail. If the machine is to be used for the formation of heel and toe pockets of hosiery, the usual picking devices (not shown) may be provided, and conventional driving means may control the selective rotation and reciprocation of the needle cylinder. Various adjusting devices for stitch size may also be provided in conventional fashion. Referring, now, to those elements which are concerned with the achievement of the objects of the invention, the usual reverse stitch cam is shown at **22** serving, as usual, for the clearing of needles during the rotary knitting which will be described, the needle cylinder rotating counterclockwise so that the needle paths are from the right to the left in FIGURE 1. The usual center cam **24** is followed by the main feed stitch cam **26**. This cam is radially movable and conventional except for the provision of a groove **28** crossing it horizontally above the lowermost point of the stitch cam. This groove is more clearly illustrated in FIGURE 2. The groove is at a level between tuck level and the lowermost level achieved by the needle butts. As will appear hereafter, it is only the upper wall of groove **28** which functions, and, accordingly, the lower wall may be cut away down to the lowermost point of the stitch cam leaving only a horizontal ledge on the stitch cam corresponding to the upper wall of the groove. Cams **30** and **32** serve to raise the needles after they pass the stitch cam **26**, cam **32** raising the needles to tuck height. A clearing cam **33** is provided, operating as hereafter described. At the auxiliary feed there are the stitch cams **34** and **36** arranged to depress the needles. Beyond the cam **36** there is the cam **38** to raise the needles to tuck level. Arranged to engage the butts **16** of the pattern jacks is the cam **40** which is followed by the cam **41** arranged to act on the butts of the intermediate jacks **8** to effect lowering of both the intermediate jacks and the pattern jacks. Various other cams are outlined in FIGURE 1 but are completely conventional, taking part in patterning and/or heel and toe formation, if the latter are to be produced by reciprocatory knitting, and these cams need not be specially described.

The main feed point of the machine is indicated generally at **42** and, as usual, there are provided at this feed point yarn feeding fingers selectively active, there being shown only the active finger **44** which feeds the main yarn M used in two-feed knitting of the leg and foot of a stocking. This yarn, as usual, passes to the needles from the throat **46** in the latch ring. The auxiliary feed point is indicated generally at **48** and shows the active yarn fingers **50** for the auxiliary yarn A which is used to form intermediate courses in the leg and foot, this yarn being fed from the throat **52** to the needles. Conventional clamping and cutting means are, of course, provided to hold and cut the yarns fed at both feeds.

Continue description of the machine parts, reference may be made to FIGURE 3 which shows the sinker cap **54** located above the usual sinker dial and carrying the cams for operating on the sinkers to effect their radial movements. The sinker cams are generally conventional and need not be described except for those special ones which are involved in carrying out the invention. Beyond the position of drawing of stitches at the main feed there is the cam **56** engageable with sinker butts, there being indicated at **58** the conventional cam which limits inward movement of the sinkers. This cam, in accordance with the invention is provided with an undercut portion **60** providing for special inward movements of the special sinkers hereafter described.

A slide **62** mounted in a groove in the sinker cap for radial movement is provided with an inner cam portion **64**. Its outer downturned end **70** is tapped to receive a limiting stop screw **72** engageable with the portion **55** of the sinker cap, this screw being held in adjusted position by a lock nut **74**. The movability of the cam portion **64** may be provided for other purposes than those of the present invention, but so far as the present objects are concerned, this cam functions as described hereafter in connection with FIGURE 5.

FIGURE 4 illustrates a conventional sinker **20** which is typical of alternate sinkers of the machine associated with one group of needles and all of the sinkers associated with another group. Each of the sinkers **20** is provided with the usual neb **78** projecting over the ledge **80** over which stitches are drawn. A vertical edge **82** is provided behind the neb **78** and has a reduced spacing from this neb as brought out more fully hereafter. Each sinker is provided with the operating butt **84** which may be acted upon by cam **56** if the sinker is not moved inwardly by spring band **76** and which butt ordinarily engages the cam **58**.

FIGURE 5 illustrates one of the special sinkers **20'** which alternate with sinkers **20** in association with a group of needles. The sinker **20'** is provided with the neb **86** and the ledge **88** the same as the regular sinkers **20**. However, there is provided spaced from the neb **86** the edge **90** which is arranged to be acted upon by the cam **64** to provide special inward movements of the sinkers **20'**. It will be noted that the spacing of the edge **90** from the neb **86** is greater than the spacing of the edge **82** from the neb **78** of a regular sinker **20**.

The butt **92** of each of the special sinkers **20'** is short, so that, as illustrated in FIGURE 5, it may pass below the outermost edge of the cam **58** and into the recess **60**.

As will appear hereafter, loops are drawn at the main feed over the ledges **80** of the conventional sinkers in usual fashion. In some alternatives of knitting the loops may be drawn at the main feed over the ledges **88** of the special sinkers; but in the description which follows, it will be seen that the stitches during certain operations will be drawn over the tops of the nebs **86** of these sinkers **20'**.

Conventional cams (not shown) impart to both types of sinkers the same wave at the auxiliary feedpoint to provide drawing of stitches thereat over the sinker ledges **80** and **88**.

The arrangement of needle butts **4** is illustrated in FIGURE 6.

With respect to their butt lengths the needles are divided into the groups **94** and **96**. The extents of these groups are arbitrary but they will be described consistently with the illustrated fabric. The butts **102** of the group **94** may be referred to as long butts and might, for example, have a 0.338 inch length. Regular sinkers are associated with the needles of this group **94** in conventional fashion.

The butts of the group **96** alternate and comprise the intermediate butts **108**, which may have lengths of 0.270 inch, and short butts **110** which, for example, may have a length of 0.210 inch. These butt lengths are, of course, arbitrary, but serve for purposes of illustration. In a 400 needle machine there may be, typically, 160 needles in the group **96**. Associated with the needles of this group are sinkers of both types **20** and **20'** in alternation.

The stitch cam **26** and the clearing cam **33** are both movable by conventional pattern control means, and the controls need not be specially described. The sinker cam **64** moves concurrently with the stitch cam **26**; when the latter is moved outwardly, the former is moved inwardly.

Before considering operation, reference may be made to FIGURE 7 which illustrates a typical product produced by the machine, assuming that it is to be used for rotary knitting throughout the formation of the stocking blank. To the knit first is the welt *w* which is produced two feed and, as usual, may involve the feeding at both feeds of somewhat heavier yarns than those used for the sheer portions of the fabric. This welt may be of the usual turned type involving use of conventional dial elements for holding and transferring loops. Following the termination of the welt, yarn changes may be provided at both feeds with substitution of lighter yarns either suitable for leg and instep formation of somewhat heavier yarn if a shadow welt is to be produced. If desired some courses of conventional two-feed knitting may be produced. Following this, or immediately following the welt, there is rotary knitting of special areas in accordance with the invention to provide the stress-relieving region below the welt accommodating flexure of the knee of the wearer. This starts at *j* and terminates at *m*. The portion *n* extending about the front of the stocking is knit two-feed with alternate courses of yarns of the respective feeds and, as will be described, is formed on the needles of the group **94**. The area *k*, formed on needles of the group **96**, has special stitches as will be brought out later. Following the termination of this region at *m* the leg *l* is knit two-feed with variations of stitch size in conventional fashion to produce shaping. This operation continues through the ankle region to the beginning at *o* of the heel region. Knitting again takes place as above indicated producing the area *p* corresponding to *n* and the area *q* corresponding to *k*, these areas as illustrated being formed on the same groups of needles as previously mentioned.

At *r* another transition takes place, the area *s* being knit two-feed with plain stitches as in the leg *l*.

A stocking is formed from the blank by stitching the blank along the line indicated at *z*, with simultaneous trimming of the excess fabric indicated below this line. This stitching extends above a few terminal courses indicated at *y* provided to insure a firm hold of the stitches.

The final stocking is then preboarded in conventional fashion. The appearance at and after preboarding is illustrated in FIGURE 8. The extent of the seam *z* is indicated.

The forward end *t* of the seam, it will be noted, is located on the form end at its edge well below the tip of the toe and the heat setting produces a permanent deformation of the fabric so that this seam end remains below the toe. The rear end *u* of the seam is located in front of the heel portion.

FIGURE 9 shows the stocking as it appears on the leg of the wearer. The seam *z* extends longitudinally below the center of the foot and terminates forwardly below the toes. The upper portion of the stocking is shown deflected as it would be when worn with the knee flexed. While shaping of the top edges of the portion *q* is not actually effected in knitting, the final result of the preboarding is the existence of a shaped heel due to the stretching of the fabric. It may be here noted that while for purposes of explanation the boundaries between areas are indicated by heavier lines, actually no streaks are produced between the areas *n* and *l*, nor between the areas *l* and *p*, the courses in these areas being identically knit as will more fully appear hereafter.

The two feed knitting of the welt and leg regions may now be described, these two regions being knit in the same fashion except for the possible differences in yarns used. Reference may be made to FIGURE 10 in addition to the other figures showing the mechanical elements. Stitch cam **26** and clearing cam **33** are located in full inward positions so as to engage the butts of all of the needles which, accordingly, follow the same path.

As illustrated in FIGURE 1, the needles having been cleared by the reverse stitch cam **22** engage the center cam **24** and pass beneath it along the path *a* being then fully depressed by the stitch cam **26** along the path *c* taking the main yarn M and casting off previously formed stitches. The needles then rise over cams **30** and **32** to tuck level. They are further raised along path *e* by clearing cam **33** which effects clearing of the latches and are then depressed by cams **34** and **36** along the path *g* to take yarn A at the auxiliary feed. They are then raised by cam **38** to the tuck level path *h*, later engaging cam **22** to be cleared thereby and reenter the phases already described. As will be evident, two feed knitting is thus produced as indicated in the courses **120** and **122** of FIGURE 10. Since the cam **64** is withdrawn, all of the sinkers follow the same path and stitches are drawn over the ledges of all of them.

Next there may be considered the formation of the region consisting of the area *k* and *n*. Cams **26** and **33** are now partially withdrawn and cam **64** is moved inwardly. When the short butts **110** pass down the cam **26** they may enter the slot **28** passing along the path *b*. The long intermediate butts rise over cam **33** along path *e* for latch clearing.

In view of this, the needles of the group **94** continue to produce two feed knitting as previously described for the formation of the pairs of courses **124** and **126**, **128** and **130**, and **132** and **134**. Since sinkers **20**, not acted on by cam **64**, are associated with the needles of group **94**, the stitch formation is as in the welt and if the same yarn were used no change in appearance of the two feed knitting would result. (This is not here impoirtant, but it is so in the transition from leg to instep knitting).

A different stitch formation is produced by the needles of the group **96**. In FIGURE 10 the wales B and D are produced by the short butt needles **110** while the wales C and E are produced by the intermediate butt needles **108**. Considering a short butt needle, this will pass down the cams **24** and **26** after clearing over the cam **22** and will take yarn M at the main feed. But it will pass along the path *b* through the groove **28**, being lowered insufficiently to cast off a previous stitch. Drawing of a new stitch is over the ledge **80** of an adjacent sinker **20** but over the neb **86** of the adjacent sinker **20'** due to the action of cam **64** in projecting the sinkers **20'** abnormally inwardly. Each short but needle then rises over cam **32** to tuck height and passes without engagement the cam **33** and is lowered by cam **36** to take in its hook the auxiliary yarn A. By

the action of cam **36** it is lowered along path *g* and now casts off the previous stitch located below its latch, but now drawing fully a composite loop of both yarns M and A. It then rises to the tuck level at *h* by passing over cam **38** and is later cleared by cam **22**. The result of this is the formation of the double yarn loop such as **136**.

The intermediate butt needles **108**, on the other hand, follow the same path as previously described, passing to the lower end of stitch cam **26** and thus casting off the previous loops. The intermediate butt needles **108** are then cleared by cam **33** with the resultant production in wales such as C and E of two feed loops, **138** of the main yarn and **140** of the auxiliary yarn.

It will now be seen why the extra yarn is provided by the use, alternately, of the sinkers **20'** which effect a measuring of yarn to an extra extent to permit, without cutting, the full drawing of loops by the cam **36** at the auxiliary feed. Because at the main feed some needles (intermediate butt) are fully lowered and the others (short butt) are not fully lowered, the average length of yarn drawn would be less than that drawn at the auxiliary feed if the stitches were all drawn over the sinker ledges. By the operation as described the proper amount of yarn is drawn at the main feed to permit the drawing of proper loops at the auxiliary feed. Some robbing of yarn from adjacent stitches takes place in this operation.

Considering FIGURE 10, it will now be seen that the courses **124** and **126** of the area *n* of the fabric have as continuations a composite type of course indicated at **127** which, in alternate wales, comprise double yarn loops and pairs of successive single loops of the respective main and auxiliary yarn. Similarly the courses **128** and **130** are continued as a composite course **131**, and courses **132** and **134** are continued as the composite course **135** to provide the area *k* of the fabric which is shown as starting at *j*.

This type of operation is continued through as great a length of the stocking blank as desired. Examination of FIGURE 10 will now make evident that the two feed region *n* in the front of the stocking blank has a greater length per number of rounds of knitting than the area *k* at the rear of the blank. Thus the latter is compacted and relatively inextensible lengthwise while the former has extensibility for the relief of stresses as previously indicated. Furthermore, the area *k* will have a somewhat heavier appearance because of the concentration of more yarn in a given unit area and an aspect of reinforcement is thus present even though the yarns used are only those which form the area *n*.

Following the formation of the areas *n* and *k*, shown as terminated at *m* in FIGURE 7, two feed knitting is resumed to form the leg and ankle portions of the blank. This is carried out as previously described, the stitch cam **26** and the clearing cam **33** being moved fully inwardly as the needles of group **94** pass these cams, cam **64** being simultaneously withdrawn so that all of the sinkers operate similarly, stitches being drawn over their ledges. The needle cams are moved inwardly during the passage of needles in the groups **94**.

The region comprising the areas *p* and *q*, starting at *o* and ending at *r* is knit in the same fashion as the region comprising the areas *n* and *k*, the same yarns being used as in the leg. Sinker cam **64** is located in its active position. As will be evident, the instep area *p* is knit identically with the leg, and being knit of the same yarns, no visible line of demarcation exists between the leg and instep. It will be noted that, although they are knit on the same needles, area *q* is shown narrower than area *k*. This is merely due to the fact that the usual fashioning is involved giving an ankle portion of less circumference than the upper leg portion of the stocking.

The stocking blank is completed by restoring two-feed knitting as in the leg throughout complete courses to form the region or area *s*, the cams **26** and **33** being moved inwardly during the passage of the needles of panel **94** while cam **64** is moved outwardly. In most cases it will be desirable to have the area *s* match in appearance the area *q*, so that heavier yarns will be used than those used in the leg and instep knitting. For example, if the leg area *l* and the areas *p* and *q* are knit of 15 denier yarns, the area *s* may be knit of 30 denier yarns, or heavier yarns of another suitable denier.

As will be evident from the foregoing the areas previously described are produced relatively tight and loose so that the stretching aspects already described are achieved. In particular these permit preboarding as detailed above to throw the seam beneath the foot.

Conventional patterning mechanism indicated but not detailed and involving jacks **10** may have various functions. It is usually provided to form mesh or resist run patterns involving formations of tucks, floats and held stitches. In particular, selective clearing at the location of cam **33** may be thus effected and, in fact, tucking may be produced in association with the types of stitch formation already mentioned. Additional use of the patterning arrangement is for the prevention of eyelets as described in said Millar and Currier application.

While for consistency of disclosure it has been assumed that for the formation of tighter panels longer (intermediate) butt needles alternate with shorter butt needles, the degree of tightening may be controlled by different arrangements, as, for example, providing in the panel **96** repeats of needles involving one longer butt and two shorter butts, or involving one longer butt and three shorter butts, or a reverse arrangement in which the repeat may consist of two longer butts and one shorter butt, etc. In general it may be noted that the tightness is increased by increase of repetition of the held loops (formed on the shorter butt needles), and decreased by decreasing the concentration of held loops in favor of more two-feed loop combinations of the type shown in wales C and E of FIGURE 10.

As already noted, the relief of stress at the knee and the arrangement to provide extensibility of the instep to locate the seam below the foot may be either concurrently or independently involved in stockings. Numerous other variations will be apparent from the foregoing and it will be understood that the invention is not to be regarded as limited except as required by the following claims.

What is claimed is:

1. A circular knitting machine comprising:

a needle cylinder,

independent needles mounted in said cylinder,

elements cooperating with said needles for the formation of stitches including means feeding yarns at at least two feed points, and

means controlling said needles and elements during the formation of a circumferential multiple course band of knitting comprising two coursewise related areas,

to cause needles to take yarns at both of said feed points and draw single yarn stitches of said yarns to produce one of said areas,

to cause certain needles to take yarns at both of said feed points and draw single yarn stitches of said yarns forming parts of the second of said areas, and

to cause needles interspersed with said certain needles to take yarns at both of said feed points and draw plain stitches, each of which contains yarns from both of said feed points, forming parts of said second area,

so that said second area includes in a round of knitting interspersed stitch structures of the two types last mentioned.

2. A circular knitting machine comprising:

a needle cylinder,

independent needles mounted in said cylinder,

elements cooperating with said needles for the forma-

tion of stitches including means feeding yarns at at least two feed points, and

means controlling said needles and elements, during the formation of a circumferential multiple course band of knitting comprising two coursewise related areas,

to cause needles to take yarns at both of said feed points and draw single yarn stitches of said yarns to produce one of said areas,

to cause certain needles to take yarns at both of said feedpoints and draw single yarn stitches of said yarns forming parts of the second of said areas, and

to cause needles interspersed with said certain needles to take yarn at one of said feed points and then, in the same round of knitting, without casting off previous stitches and without clearing, to take yarn at the other of said feed points and draw plain stitches, each of which contains yarns from both of said feed points, forming parts of said second area,

so that said second area includes in a round of knitting interspersed stitch structures of the two types last mentioned.

3. The knitting method carried out on a circular knitting machine comprising a needle cylinder, independent needles mounted in said cylinder, elements cooperating with said needles for the formation of stitches including means feeding yarns at at least two feed points, and means controlling said needles and elements; said method comprising, during the formation of a circumferential multiple course band of knitting comprising two coursewise related areas:

causing needles to take yarns at both of said feed points and draw single yarn stitches of said yarns to produce one of said areas,

causing certain needles to take yarns at both of said feed points and draw single yarn stitches of said yarns forming parts of the second of said areas, and

causing needles interspersed with said certain needles to take yarns at both of said feed points and draw plain stitches, each of which contains yarns from both of said feed points, forming parts of said second area,

so that said second area includes in a round of knitting interspersed stitch structures of the two types last mentioned.

4. The knitting method carried out on a circular knitting machine comprising a needle cylinder, independent needles mounted in said cylinder, elements cooperating with said needles for the formation of stitches including means feeding yarns at at least two feed points, and means controlling said needles and elements; said method comprising, during the formation of a circumferential multiple course band of knitting comprising two coursewise related areas:

causing needles to take yarns at both of said feed points and draw single yarn stitches of said yarns to produce one of said areas,

causing certain needles to take yarns at both of said feed points and draw single yarn stitches of said yarns forming parts of the second of said areas, and

causing needles interspersed with said certain needles to take yarn at one of said feed points and then, in the same round of knitting, without casting off previous stitches and without clearing, to take yarn at the other of said feed points and draw plain stitches, each of which contains yarns from both of said feed points, forming parts of said second area,

so that said second area includes in a round of knitting interspersed stitch structures of the two types last mentioned.

References Cited

UNITED STATES PATENTS

2,045,776	1/1936	Holt	66—42
2,970,459	2/1961	Hart et al.	66—42
3,221,522	12/1965	Nebel	66—185
3,228,198	1/1966	Nebel	66—185
532,196	1/1895	Glouton	66—187
2,987,899	1/1961	Mahler	66—42
3,181,314	5/1965	Millar	66—42
3,220,219	11/1965	Currier	66—42
3,221,517	12/1965	Butler	66—42
3,080,740	3/1963	Nebel.	
3,131,556	5/1964	Nebel	66—178
3,293,885	12/1966	Nebel.	
3,241,340	3/1966	Knohl	66—185

FOREIGN PATENTS

1,321,409	2/1963	France.
834,560	5/1960	Great Britain.
895,672	5/1962	Great Britain.
578,115	6/1958	Italy.
746,756	3/1956	Great Britain.

W. CARTER REYNOLDS, Primary Examiner