P. P. JOSEF.
Machine for Planing Wood.

No. 197,475. **Patented Nov. 27, 1877.**

Fig. 1.

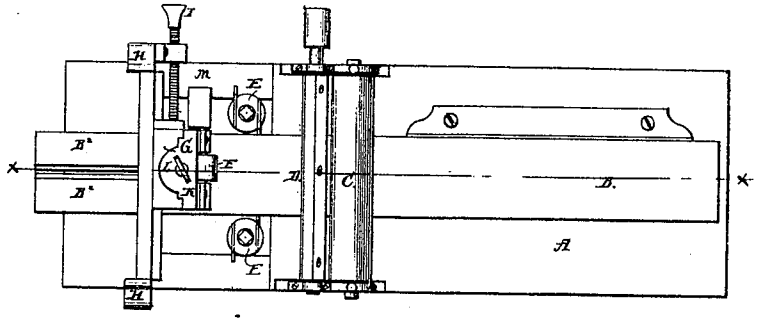

Fig. 2.

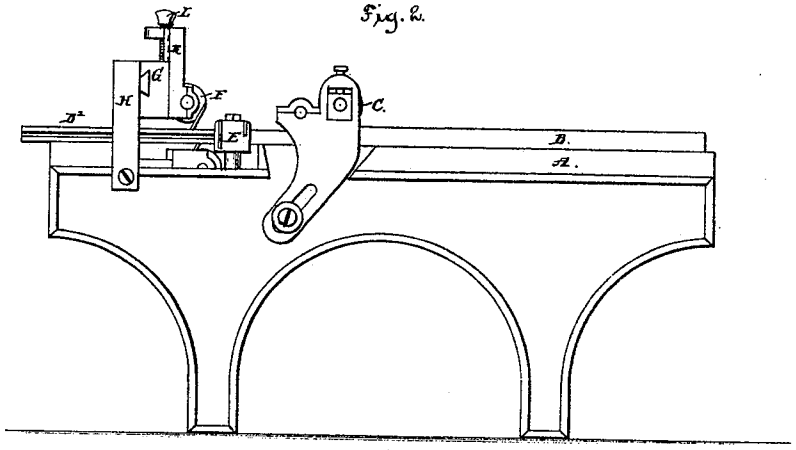

Fig. 3.

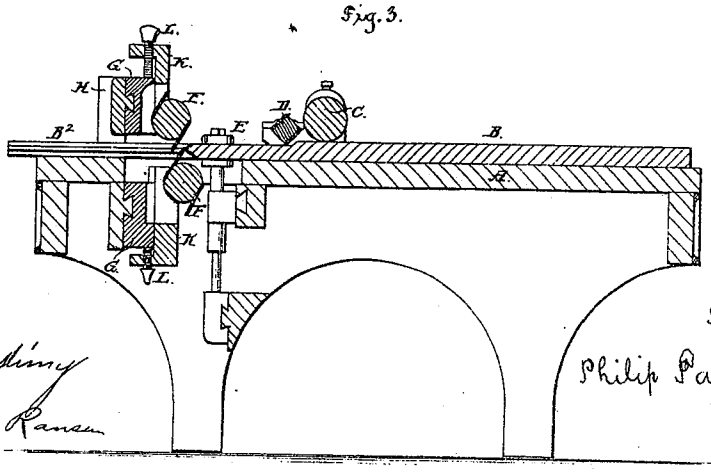

Attest:
Edgar P. Pudney
Frank H. Ransen

Inventor.
Philip Paul, Josef

N. PETERS, PHOTO-LITHOGRAPHER, WASHINGTON, D. C.

UNITED STATES PATENT OFFICE.

PHILIP PAUL JOSEF, OF BUFFALO, NEW YORK, ASSIGNOR TO HIMSELF, JOHN F. HABERSTRO, AND GOTTLOB E. SCHNEIDER, OF SAME PLACE.

IMPROVEMENT IN MACHINES FOR PLANING WOOD.

Specification forming part of Letters Patent No. **197,475**, dated November 27, 1877; application filed August 11, 1876.

To all whom it may concern:

Be it known that I, PHILIP PAUL JOSEF, of the city of Buffalo, county of Erie and State of New York, have invented an Improvement in Machines for Planing Wood, of which the following is a full, clear, and exact description, reference being had to the drawings accompanying this specification, and forming part of same, in which—

Figure 1 is a top plan view; Fig. 2, a side view; and Fig. 3, a section through the line *x x*, Fig. 1, the parts B B representing transverse section of two strips of flooring.

Similar figures and letters of reference indicate similar parts.

My object in this device is to produce an arrangement of machinery which may be applied to an ordinary planer and matcher in order to manufacture simultaneously two strips of tongued-and-grooved lumber at one operation, and which, from its nature, shall be susceptible of quick and easy adjustment without interfering with other and distinct parts of planing-machine, and capable of being speedily raised or lowered out of the way when not required for use, all of which I seek to accomplish by the means herein described.

A, Fig. 1, is the bed of planer and matcher, on which a piece of lumber, B, is being run through in order to form two strips of flooring, B^2 B^2. C is the feed-roll; D, the planer-head; E E, the matcher-heads.

As these are parts commonly employed in such machines they need no further description, except that the heads E E, instead of carrying, as usual, the one a set of grooving and the other tonguing knives, are both fitted with those for forming grooves, the tongues being formed by the upper and under cutters F F, the points of which, dividing the board at the junction of the tongues, separate it into two pieces of perfectly tongued-and-grooved flooring, &c.

By means of additional cutters, ranged parallel with F F, the lumber may be divided into more than two strips at the one operation, of which, however, two only will be formed with tongues and grooves, the others having tongues only.

In the arrangement, as shown, there is a carriage, G, having dovetailed bearings upon the arms H H, and sliding laterally upon them, being made to adjust by means of the screw I, thus varying the width of the strips formed from the board B.

The smaller carriages K K, to which are attached the cutters F F, with their spindles and pulleys M M, slide vertically in grooves formed in the arms of the carriage G, above and beneath the planer-bed A, and are adjusted by the screws L L, the depth of the grooves in the center of the board B being thus regulated, upon which depends the proper thickness of the tongues formed by this method.

In the sectional view, Fig. 3, the upper and under cutters F F and the grooving-knives in the matcher-heads E E are shown as in operation, the parts B B showing section of two strips of completed flooring.

I claim—

The combination of the slotted bed A with the vertically-adjustable planer-head D, feed-roller C, matcher-heads E E, upper and lower dividing cutter-heads F F, arms H H, laterally-adjustable carriages G G, and vertically-adjustable carriages K K, constructed substantially as shown and described, and for the purpose specified.

PHILIP PAUL JOSEF.

Witnesses:

EDGAR P. PICKERING,
FRANK H. RANSOM.