No. 638,408. Patented Dec. 5, 1899.

F. WILLIAMS.

ELECTRICALLY CONTROLLED LOCK COLLECTING OR OTHER BOX.

(Application filed Mar. 27, 1899.)

(No Model.) 2 Sheets—Sheet 1.

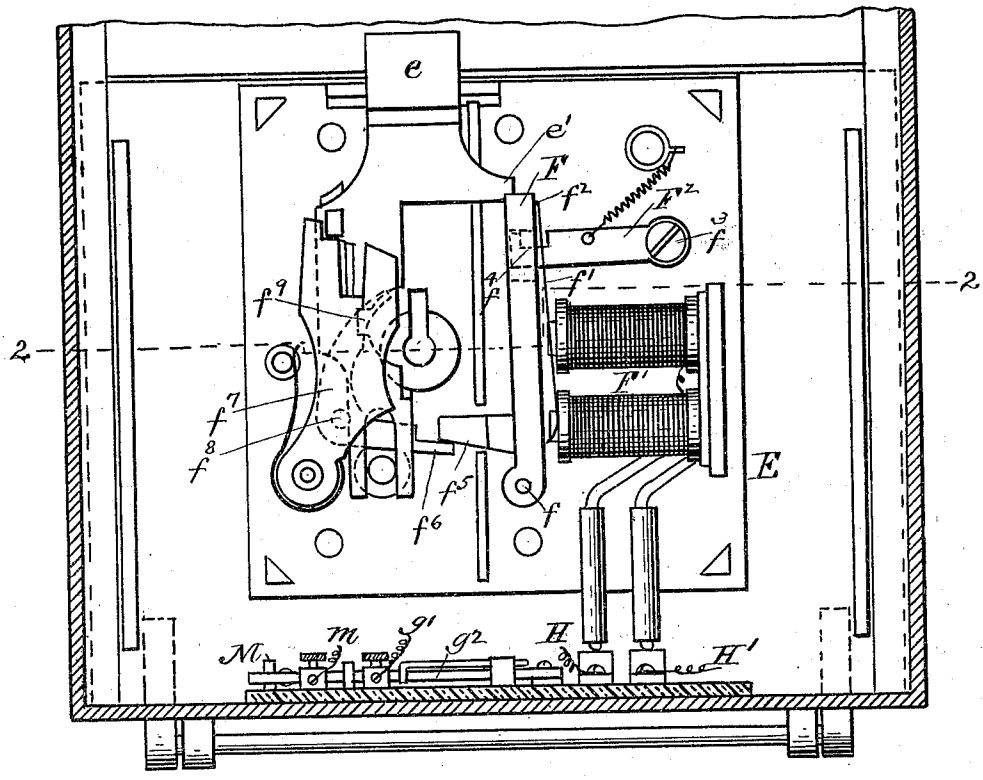

Fig. 1.

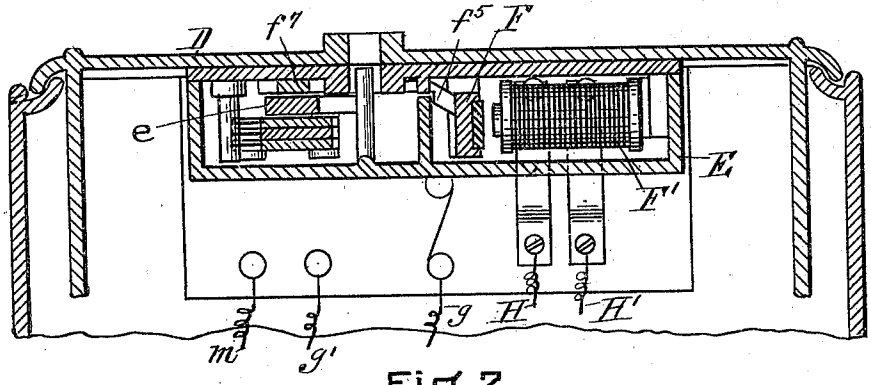

Fig. 2.

WITNESSES

J. M. Dolan.

T. A. Walsh.

INVENTOR

Frederick Williams

by his attys

Clarke & Raymond

THE NORRIS PETERS CO., PHOTO-LITHO., WASHINGTON, D. C.

No. 638,408. Patented Dec. 5, 1899.

F. WILLIAMS.

ELECTRICALLY CONTROLLED LOCK COLLECTING OR OTHER BOX.

(Application filed Mar. 27, 1899.)

(No Model.) 2 Sheets—Sheet 2.

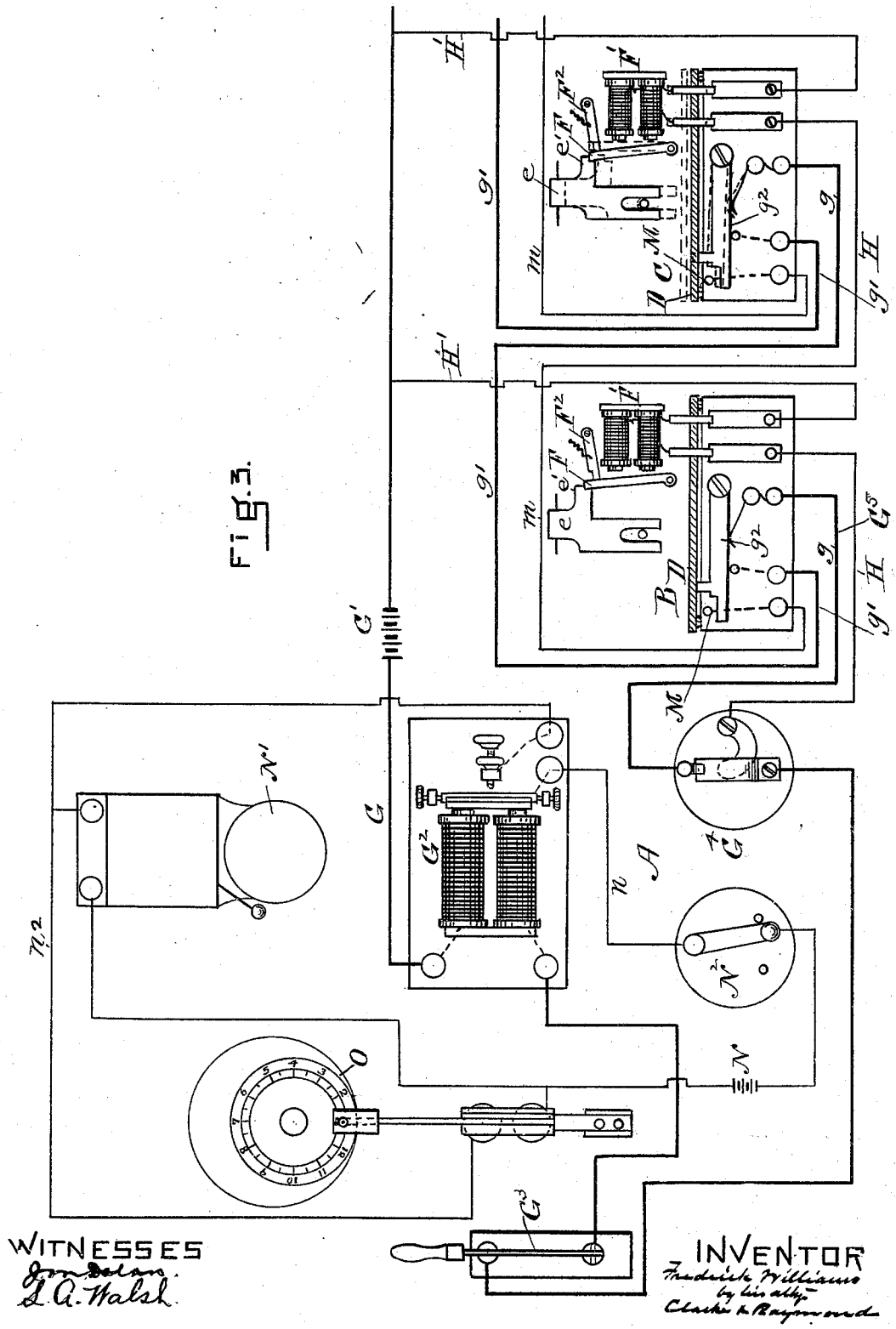

Fig. 3.

WITNESSES
Jon Delano
S. A. Walsh

INVENTOR
Frederick Williams
by his attys
Clarke & Raymond

THE NORRIS PETERS CO., PHOTO-LITHO., WASHINGTON, D. C.

UNITED STATES PATENT OFFICE.

FREDRICK WILLIAMS, OF REVERE, MASSACHUSETTS.

ELECTRICALLY-CONTROLLED LOCK COLLECTING OR OTHER BOX.

SPECIFICATION forming part of Letters Patent No. 638,408, dated December 5, 1899.

Application filed March 27, 1899. Serial No. 710,562. (No model.)

To all whom it may concern:

Be it known that I, FREDRICK WILLIAMS, a citizen of the United States, residing at Revere, in the county of Suffolk and State of Massachusetts, have invented a new and useful Improvement in Electrically-Controlled Lock Collecting or other Boxes, of which the following is a full, clear, and exact description, reference being had to the accompanying drawings, forming a part of this specification, in explaining its nature.

The invention relates to an electrically-controlled lock collecting or other box. It is usually adapted for use in connection with post-office collecting-boxes and will be hereinafter described as applied to them, although I do not mean by so doing to limit the invention to such use.

It consists in a series of boxes electrically connected with each other and with a central station, whereby the opening of the boxes primarily is in the control of the central station and whereby also the opening of a box is noted at the central station by a sound-indicator and by a time-indicator and whereby, further, by suitable code or by telephone, if desired, signals may be interchanged between each box and the central station.

The invention further relates to means whereby the unlocking of one box and the opening thereof puts the next box, and that only, in the series in a condition to be unlocked and opened, while the remaining boxes of the series remain locked and cannot be opened.

In the drawings, Figure 1 is a view in enlarged elevation of the electrically-controlled lock which forms a part of the invention. Fig. 2 is a view in horizontal section upon the dotted line 2 2 of Fig. 1. Fig. 3 is a conventional diagrammatic view to illustrate the electric connection between the central station and the boxes and the boxes with each other.

Referring to Fig. 3, A represents the central station, B the first of a series of collecting-boxes, and C the second box of the series, which may have any desired number. Each box has the following construction: first, a door or drawer D, which is adapted to be moved to open or close the box, and, second, an electrically-controlled lock E, the bolt *e* of which is adapted to be drawn and shut by a key which is common to the lock upon all the boxes, as the locks are alike. Each lock has in addition to some usual means for drawing and returning the bolt an electrically-controlled latch which automatically engages the bolt when closed and locks it closed and which is not operated by the usual key of the lock, so that the possession of the key does not afford a means for the opening of the box unless the lock-latch has been previously withdrawn. To permit this to be done, a magnet is employed in the lock, which when energized withdraws the latch from the bolt and permits the ordinary key to unlock the box, and in my invention the magnets of each lock are adapted to be energized, the magnet of the first box in the series from the central office and the magnet of the second box in series from the first box, and so on, each box controlling the magnet of the next box in order.

In the figures, F represents the bolt-latch. It is also preferably an armature and is arranged in front of the poles of the magnet F′. It is pivoted at f to the lock-case. It is moved away from the magnet and behind the bolt by a spring f', interposed between it and the magnet, bearing against the magnet and fastened at f^2 to the latch. The energizing of the magnet draws the spring and the latch toward it and the latch from behind the bolt, permitting the bolt to be drawn back by the operator's key. The latch upon being removed from engagement with the bolt by the energizing of the magnet is caught and held withdrawn from the bolt by the spring-catch F^2, which is pivoted at f^3 to the lock-case and engages by its notch f^4 at its outer end a section of the latch. The latch is thus held back from the bolt after the magnet has become inert and until the bolt has been drawn inward by the key to unlock the box. This inward movement of the bolt brings its projection e' into contact with the outer end of the catch F^2 and moves it sufficiently to disengage it from the latch, and the latch is then moved by its closing-spring against the side of the bolt and remains in this position until the bolt has been moved outward by the key, when it returns under the bolt to lock it or to the position represented in Fig. 1.

To permit the use of a master-key, the latch F may have a laterally-extending arm f^5, with

which the end f^6 of a lever f^7, pivoted at f^8, moves when the said lever is moved by contact of the master-key therewith, the section f^9 on the said lever being so shaped on its inner end as to be moved outward by contact of the master-key therewith, thereby moving upward the end f^6 and causing the latch to be moved from the bolt.

Before describing the lock-magnet-energizing circuit I would say that G represents a main circuit, which extends from battery G′ through relay G^2, switch G^3, button G^4, and box-line G^5. The main line G enters each box by line g and leaves it by line g', passing through a switch g^2 in the box, which is held closed by the drawer-door or other movable part D of the box. Normally the current passes from the battery through relay-coils, button G^4, and all the boxes on the main line. The collector before leaving the main office switches the current by means of the button G^4 from the main line to the lock-line H, and this energizes the magnet F′ of the first box, causing the bolt-latch of the lock to release the bolt and to be caught and held by its catch. The current passes from the magnet F′ by line H′ to the main return-line. The operator then proceeds to the first box and with his key withdraws the bolt, unlocking the box. He then moves the drawer or cover D to open the box, and this permits the switch g^2 to establish contact with the contact-point M of a local circuit m, extending from box B through the magnet F′ of box C and thence to the main return-line, thereby causing the magnet of the second box to withdraw the latch of the locking-bolt of said box. This permits the operator to unlock when he reaches it the second box of the series. The returning of the cover or drawer by the operator of the first box then breaks the circuit between g and the local line m by the moving back of the switch g^2 from the contact-point M and the circuit is reëstablished in the main line, and the local line-circuit being then broken the magnet F′ of the second box is demagnetized. The magnet F′ of the first box is demagnetized upon the removal of pressure from the operating-button G^4, and the operator upon moving the drawer or cover to close the box demagnetizes the magnet F′ of the second box, and the locking of the first box which then follows mechanically permits the bolt-latch to move into a position to lock it against the action of the key, and as the unlatching-magnet cannot be energized from a following box, but only from the button, or in the case of a box after the first from the preceding box, it follows that the boxes cannot be opened except in the order specified. The pressing of the button G^4 in the first instance or the movement of the switch g^2 in each box establishes a circuit from battery N through the relay and line n and actuates the bell N′ at the central station. It also through the circuit N^2 actuates a time-recorder O. As each box is opened a bell or other alarm is sounded at the central office, and at the same time the time of the opening is indicated upon the automatic time-recorder O at the central office.

Of course the alarm and time-indicator may be located at other points, if desired, and it is not necessary to describe the construction of either specifically, as it is well known. The bell or other alarm may also be used to communicate messages from any box on the line by simply providing a code of sound-signals and by operating the switch g^2 to such code.

The bell and indicator circuits may be rendered inoperative by the switch N^2, which is adapted to throw out the local circuit by being removed from the contact-point.

It will be seen that all the boxes of the series are under the control of the central station; that the collector cannot begin to collect the contents of the boxes until the magnet of the lock of the first box has been energized from the central station; that the fact that he has opened said box and is removing its contents is indicated by the alarm or stroke of the bell, which is automatically actuated from the box; that each box controls only the box in the series immediately following it in order, and that therefore each box of the series must be opened in order and the opening of each is signaled back to the central station, and that the time of the opening of each is indicated upon the time-recorder. All the boxes are in the control of the central station, as by opening the switch G^3 the current ceases to flow through the main line and none of the boxes can then be opened.

I would further say that the invention also indicates and registers, or either, the duration of time in which the box remains open and also the duration of time employed by the collector in going from box to box, as two signals are caused to be sounded or indicated at the central office, one upon the opening of the box and the other upon the closing of the box, and these signals may be made by the alarm only or noted by the time-indicator only, or by both.

While I have mentioned the lock as employed upon a door to receptacles or boxes, I would not be understood by that as limiting the size of the receptacle or box, but mean to be understood as including doors for rooms and buildings as well, the invention thus providing means whereby such doors are controlled from a station at a distance.

Having thus fully described my invention, I claim and desire to secure by Letters Patent of the United States—

1. A series of receptacles or boxes each of which has a drawer, door or cover, a lock for locking said drawer, door or cover in its closed position, the bolt of which is adapted to be withdrawn and shut by a key, a bolt-latch for locking the bolt in its locking position, a magnet to remove, when energized, the bolt-latch from the bolt and means for energizing each magnet from a box or station im-

mediately preceding it in order, as and for the purposes set forth.

2. A series of receptacles or boxes, each of which has a drawer, door or cover, a lock for locking said drawer, door or cover in its closed position, the bolt of which is adapted to be opened by a key, a bolt-latch for locking the bolt in its closed position, a magnet to remove, when energized, the bolt-latch from the bolt, means for energizing each magnet from a box, or station immediately preceding it in order, and a catch to engage the latch after it has been removed from the bolt and to hold it engaged until the bolt has been withdrawn.

3. The improved dead-lock herein described, having a bolt which is adapted to be positively moved in each direction to lock or unlock by a separate instrumentality like a key, a bolt-latch for locking the bolt in its closed position, a magnet to remove, when energized, the bolt-latch from the bolt to permit it to be moved by the key, a catch to engage and hold the latch when withdrawn from the bolt and means for releasing the latch-catch and for restoring the latch to a position to engage the bolt, substantially as described.

4. A lock having a bolt adapted to be opened and closed by a key, a bolt-latch for locking the bolt in its closed position, a magnet to remove, when energized, the bolt-latch from the bolt, a catch to receive the latch and hold it removed from the bolt and an extension upon the bolt adapted to come into contact with the catch upon the opening of the bolt to remove it from the latch, means for moving the latch upon the catch when thus released and for closing it behind the bolt or a projection thereof upon the movement of the bolt to locking position.

5. A lock having a bolt adapted to be moved in both directions by a key, a bolt-latch for locking the bolt in its locked position, a magnet to remove, when energized, the bolt-latch from the bolt, a lever adapted to be operated only by a master-key and connected with the latch, whereby the latch may be withdrawn from the bolt either by the magnet or by the key, as and for the purposes set forth.

6. A series of receptacles or boxes, each of which has a drawer, door or cover, a lock for locking said drawer, door or cover in its closed position, the bolt of which is adapted to be withdrawn and shut by a key, a bolt-latch for locking the bolt in its locking position, a magnet to remove, when energized, the bolt-latch from the bolt, means for energizing each magnet from a box or station immediately preceding it in order, an indicator or alarm electrically connected with each box to be automatically operated upon the opening of the drawer, door or cover, as and for the purposes set forth.

7. The combination of a series of receptacles or boxes, a main electric circuit connecting all the boxes with a battery and central station, a lock in each box electrically controlled, a local circuit between each box and the one following it and between the station and the first box closed by a switch at the station and at each box and which when closed actuates the lock-controlling mechanism of the box following, as and for the purposes set forth.

8. The combination of a series of receptacles or boxes, a main electric circuit connecting all the boxes with a battery and central station, a lock in each box electrically controlled, a local circuit between each box and the one following it and closed by a switch at each box for actuating the lock-controlling mechanism of the box following, as and for the purposes set forth.

9. The combination of a series of receptacles or boxes, a main electric circuit connecting all the boxes with a battery and central station, a lock in each box electrically controlled, a local circuit between each box and the one following it and closed by a switch at each box for actuating the lock-controlling mechanism of the box following, and means at each box such as a drawer, door or cover for closing or opening said switch according as the said drawer, door or cover is opened or closed, as and for the purposes set forth.

10. The combination of a series of receptacles or boxes, a main electric circuit connecting all the boxes with a battery and central station, a lock in each box electrically controlled, a local circuit between each box and the one following it, and between the station and the first box closed by a switch at the station and at each box, and which when closed actuates the lock-controlling mechanism of the box following, an indicator at the central station connected with the boxes to be actuated upon the opening of each.

11. The combination of a series of receptacles or boxes, a main electric circuit connecting all the boxes with a battery and central station, a lock in each box electrically controlled, a local circuit between each box and the one following it, and between the station and the first box closed by a switch at the station and at each box, and which when closed actuates the lock-controlling mechanism of the box following, a time-indicator at the central station connected with the boxes to be actuated upon the opening of each.

12. The combination of a series of receptacles or boxes, a main electric circuit connecting all the boxes with a battery and central station, a lock in each box electrically controlled, a local circuit between each box and the one following it, and between the station and the first box closed by a switch at the station and at each box, and which when closed actuates the lock-controlling mechanism of the box following, a sound-indicator and a time-indicator at the central station connected with the boxes to be actuated upon the opening of each.

13. The combination of a series of receptacles or boxes, a main electric circuit connect-

ing all the boxes with a battery and central station, a lock in each box electrically controlled, a local circuit between each box and the one following it and between the station and the first box closed by a switch at the station and at each box which when closed actuates the lock-controlling mechanism of the box following, and means for opening and closing the main electric circuit, as and for the purposes set forth.

14. The combination of a series of receptacles or boxes, the main electric circuit connecting all the boxes with a battery and central station, a lock in each box electrically controlled, a local circuit between each box and the one following it and between the station and the first box closed by a switch at the station and at each box which when closed actuates the lock-controlling mechanism of the box following, an alarm mechanism at the central station connected with and independently operated by each box and also adapted to be used as a means for signaling to the central station from each box, as and for the purposes set forth.

15. The combination of a series of boxes, their locks, lock-magnets F′, the lock-latches, the movable drawer, door or cover D, the switches g^2, the main circuit G, battery G′ and the auxiliary box-connecting circuits, as and for the purposes set forth.

FREDRICK WILLIAMS.

Witnesses:
F. F. RAYMOND, 2d,
J. M. DOLAN.