H. E. GOLDBERG (NOW BY JUDICIAL CHANGE OF NAME H. GOLBER).

CALCULATING MACHINE.

APPLICATION FILED DEC. 28, 1916.

1,369,097. **Patented Feb. 22, 1921.**

4 SHEETS—SHEET 1.

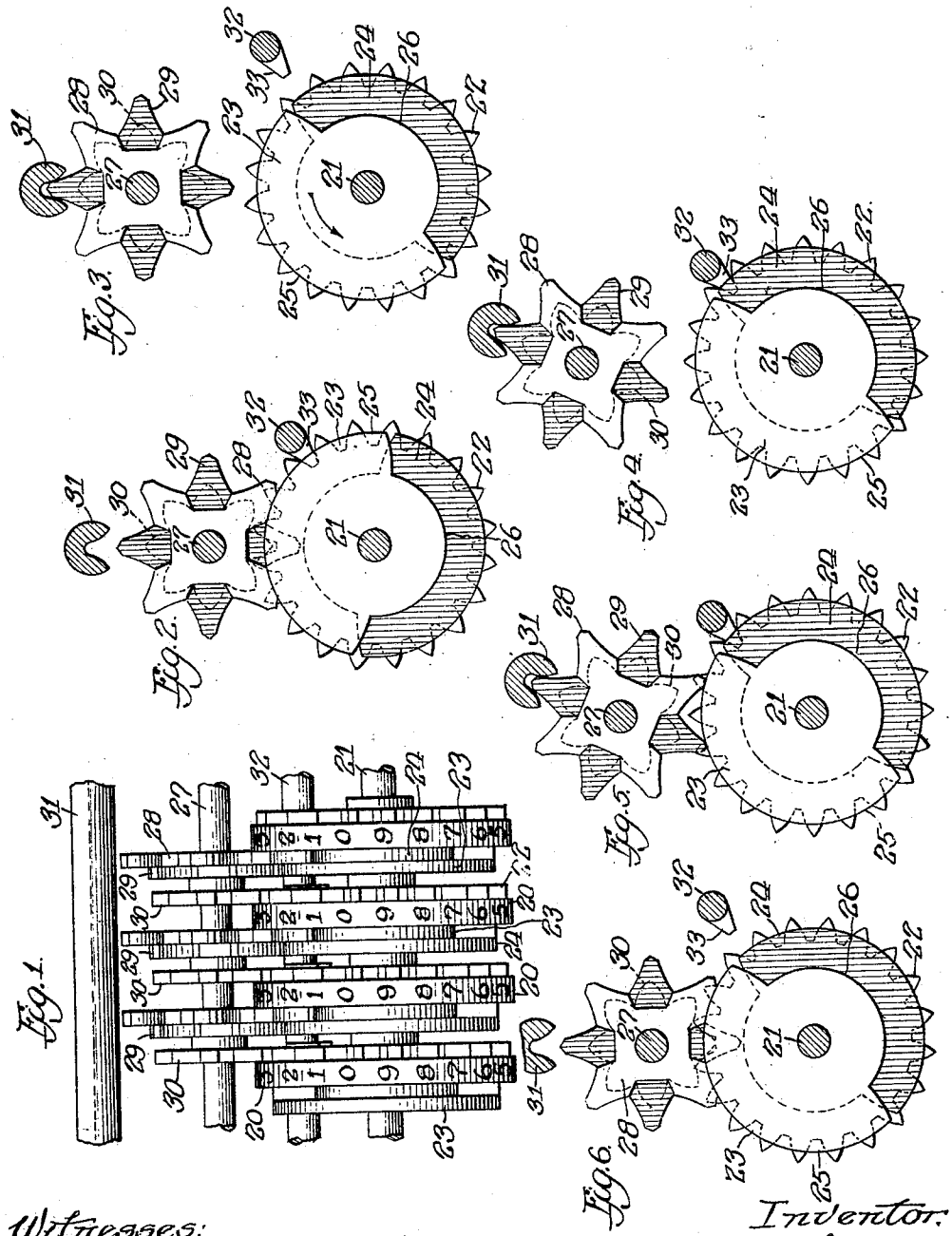

Witnesses:
Fred C. Lavion
R. Burkhardt

Inventor:
Hyman E. Goldberg
By Walter M. Fuller
Atty.

H. E. GOLDBERG (NOW BY JUDICIAL CHANGE OF NAME H. GOLBER).

CALCULATING MACHINE.

APPLICATION FILED DEC. 28, 1916.

1,369,097.

Patented Feb. 22, 1921.

4 SHEETS—SHEET 2.

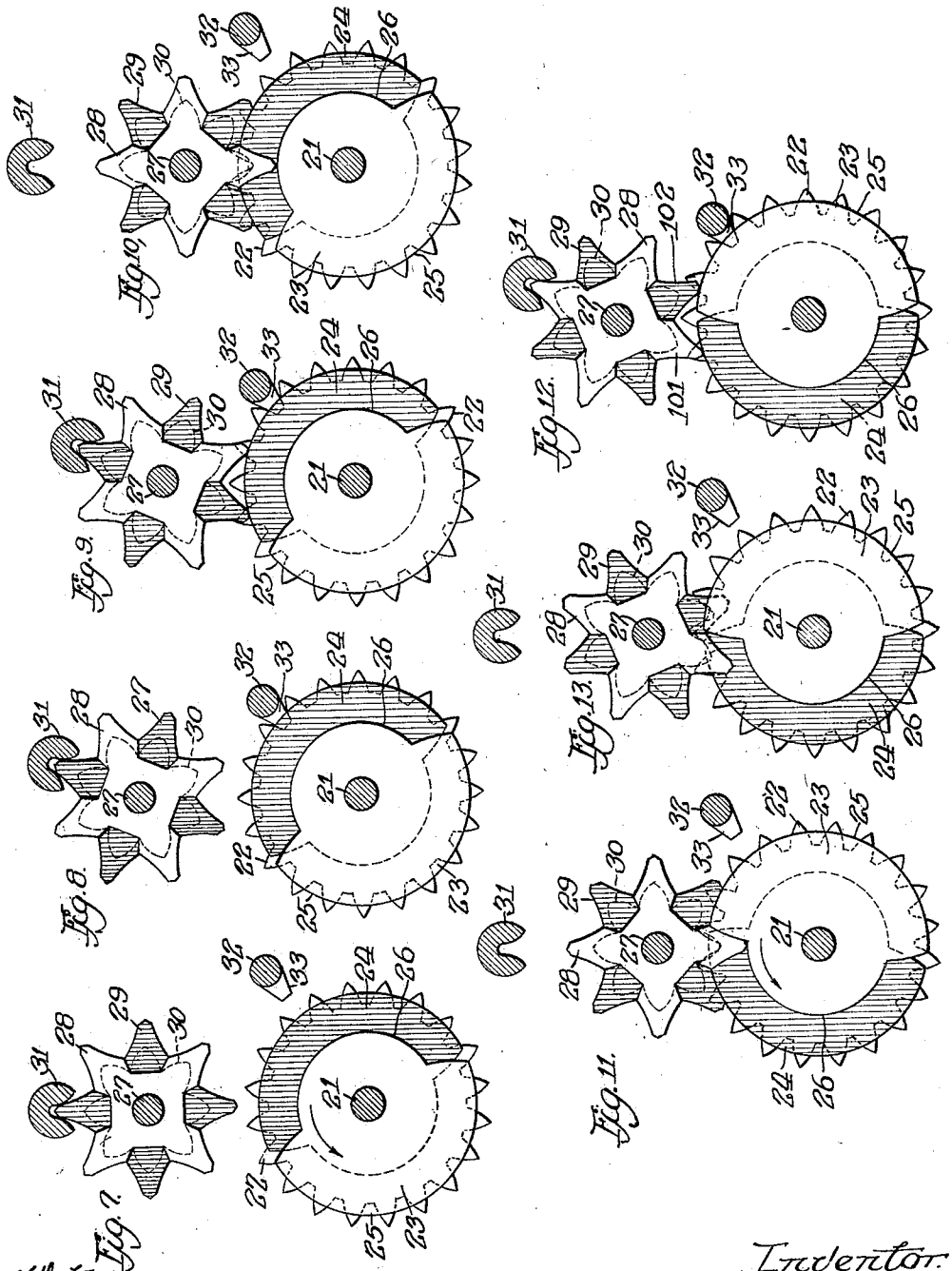

Witnesses:
G. C. Brown
R. Birkhardt

Inventor:
Hyman E. Goldberg
By Walter M. Fuller
Atty.

H. E. GOLDBERG (NOW BY JUDICIAL CHANGE OF NAME H. GOLBER).

CALCULATING MACHINE.

APPLICATION FILED DEC. 28, 1916.

1,369,097. **Patented Feb. 22, 1921.**

4 SHEETS—SHEET 3.

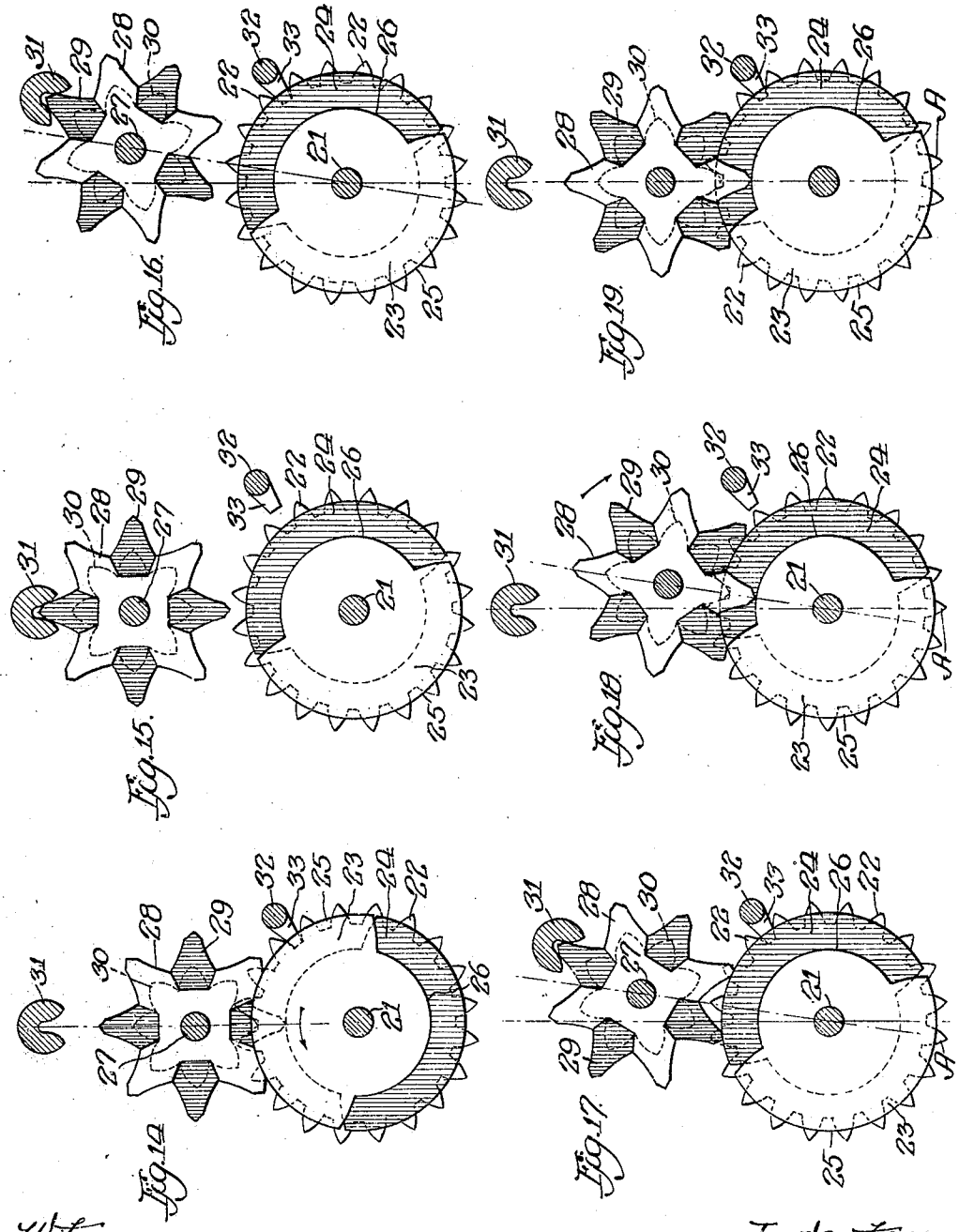

Witnesses:
Geo. G. Rowan
R. Burkhardt

Inventor.
Hyman E. Goldberg
By Walter M. Fuller
Atty.

H. E. GOLDBERG. (NOW BY JUDICIAL CHANGE OF NAME H. GOLBER).

CALCULATING MACHINE.

APPLICATION FILED DEC. 28, 1916.

1,369,097. Patented Feb. 22, 1921.

4 SHEETS—SHEET 4.

Fig. 20.

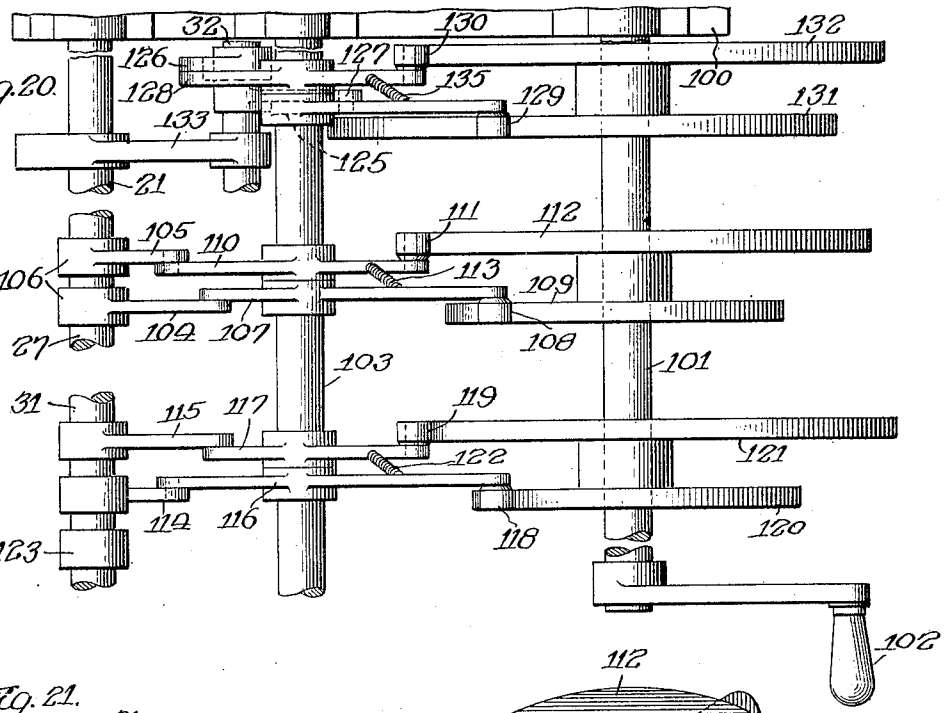

Fig. 21.

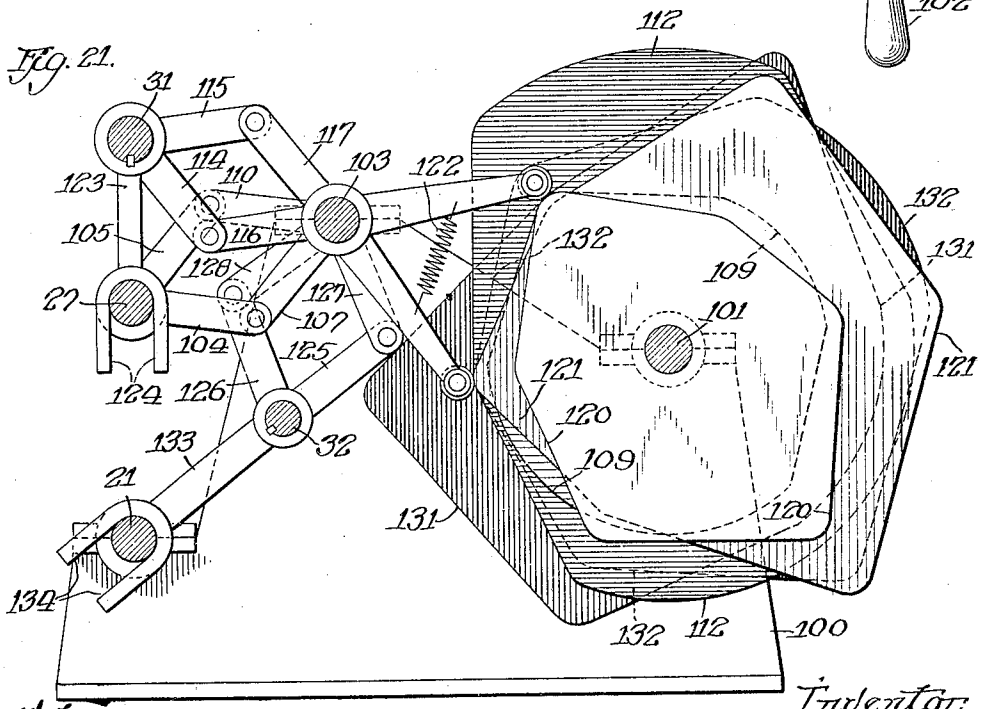

Witnesses:
Geo. C. Dawson
P. Burkhardt

Inventor:
Hyman E. Goldberg
By Walter M. Fuller
Atty.

UNITED STATES PATENT OFFICE.

HYMAN ELI GOLDBERG, (NOW BY JUDICIAL CHANGE OF NAME HYMAN GOLBER,) OF CHICAGO, ILLINOIS, ASSIGNOR TO GOLDBERG CALCULATING MACHINE COMPANY, OF CHICAGO, ILLINOIS.

CALCULATING-MACHINE.

1,369,097. Specification of Letters Patent. Patented Feb. 22, 1921.

Continuation of application Serial No. 731,458, filed November 14, 1912. This application filed December 28, 1916. Serial No. 139,257.

To all whom it may concern:

Be it known that I, HYMAN ELI GOLDBERG, a citizen of the United States, residing at Chicago, in the county of Cook and State of Illinois, have invented certain new and useful Improvements in Calculating-Machines, of which the following is a specification.

My invention relates in general to calculating or computing machines, and pertains more especially to the means for carrying the units forwardly from the various digit members to those of next higher order or value, as is necessary when the numeral 10 is reached or passed.

One of the prime objects of the invention is to provide a carrying mechanism of this character which will be composed of but few parts, economical to manufacture and assemble, as well as occupying but small space. The appliance is adapted to add or subtract equally well.

The structure and operation of the machine are based upon a new principle in devices of this character. That is to say, the carrying movement is divided into two steps, which may occur successively or simultaneously. In one embodiment of the invention, all of the numeral or value wheels are given an advance half-step in addition to whatever value may be registered thereon, and then those of the wheels to which carrying is transmitted are given a further half-step to complete the carrying operation, and the remainder of the wheels are given a reverse half-step movement, which of course, counteracts or neutralizes the other previous half-step, whereby such latter wheels are brought to their proper positions.

In another embodiment of the invention, all of those wheels to which the carried units are to be added are given a preliminary forward half-step, and the remainder of the wheels are each given a reverse half-step. Then all of the wheels are advanced a half step, making a full-unit advance for all of the previously partially-advanced wheels, and bringing all of the other wheels to normal position without the addition of carried units, the initial back half-step being overcome by the subsequent forward half-step.

Both of these partial movements may be imparted to the wheels simultaneously, and, under such circumstances, the wheels receiving the carried units advance one whole step, representing the received carried unit, and the other wheels remain stationary, the movements of the two transmitting devices neutralizing one another.

These various embodiments of the invention are illustrated in the accompanying drawings, wherein like reference characters refer to the same parts.

In these drawings:

Figure 1 is a fragmentary view of the mechanism, looking at the parts at right angles to their axes;

Fig. 2 is a vertical section illustrating a portion of the mechanism with the numeral 5 set up on one of the value wheels;

Fig. 3 illustrates the withdrawal of the transmitting mechanism of the carrying device and the turning of the lower value wheel to add the numeral 3 to the 5 previously registered thereon;

Fig. 4 shows the driving gear of the next higher value wheel advanced a half step, and also illustrates the transmitting device rotated on its own axis a half step;

Fig. 5 illustrates the transmitting mechanism brought into contact with the other portions of the device;

Fig. 6 illustrates the manner in which the driving gear of the higher value wheel is set back a half step because no unit was carried under these conditions;

Figs. 7 to 10 illustrate the movements of the parts in adding the numeral 7 to the numeral 5, and illustrates the manner in which the unit is carried to the next higher value wheel;

Figs. 11, 12, and 13 show the actuation of the parts when the lower value numeral-wheel reaches the 9 position;

Figs. 14 to 19 inclusive illustrate a modification wherein the universal movements of the parts are brought about after their selective movements; and

Figs. 20 and 21 show in fragmentary plan and section respectively the means for actuation of the various shafts.

Referring first to Figs. 1 to 6 inclusive, it will be noticed that this computing machine or summator has a decimal set of numeral or value wheels 20, 20, supported on a common shaft 21, each of the value or digit wheels displaying on its face two sets of numerals 1 to 0, inclusive. At its right-hand side as the parts are viewed in Fig. 1,

each of the numeral wheels has fixed thereto a drive gear 22, and it has rigidly secured to its opposite face two mutilated or semicircular disks 23 and 24, angularly offset one hundred and eighty degrees from one another. Stated differently, each of these disks has a wide tooth 25 and a notch or space 26, each of approximately one hundred and eighty degrees, the tooth of the one disk being opposite the notch of the other. Each of these numeral or value wheels and its associated drive-gear and duplex-disk device is freely rotatable on the supporting-shaft 21.

The construction also comprises an upper or transmitter shaft 27 provided with a plurality of carrying or transmitting devices, each adapted for operative association with the duplex disk of one value wheel and the drive gear of the next higher value wheel. Each of these transmitting devices is rotatable on the shaft 27, and is composed of two star wheels 28 and 29 rigid or integral with one another and each having four teeth, the two wheels being angularly offset with reference to one another forty-five degrees. Also fastened to or integral with these star-wheels is a pinion 30, the teeth of which are adapted to coöperate with those of the drive gear 22.

The device also includes a notched bar or lock 31, and a rod 32 provided with teeth or fingers 33 adapted to co-act with the notches of the drive gears 22.

Inasmuch as the movements of several of the parts of this mechanism may be actuated by any suitable and well known form of device, they have not been illustrated for clearness in the understanding of the method and principle of operation, and, consequently, in this description their movements have been indicated as accomplished by hand.

Ordinarily all of the numeral or digit wheels which are to be moved for the reception of the digits are rotated simultaneously, but they may, of course, be actuated successively. In the structure indicated, each of the value or numeral-wheel drive-gears 22 has twenty teeth, corresponding to the number of the numerals displayed on the face of the companion value wheel, and each of the pinions 30 has eight teeth, corresponding to the total number of teeth of the duplex star-wheels.

We will now assume that the numeral 5 has been registered on one of the value or digit wheels and that it is desired to add 3, making a total of 8, and without the carrying of any unit to the next higher value wheel. When the numeral 5 is registered on such value wheel, its two disks 23 and 24 and the star wheels will be in the position indicated in Fig. 2. It should be noticed that in the same figure two adjacent teeth of the star wheel 28 are riding on the edge of the disk 23, and that the intermediate tooth of the other star wheel 29 is accommodated in the notch 26 of the other disk 24.

In order to add the numeral 3, the shaft 27 with its pinions and star wheels, is moved up so that one tooth of each duplex star-wheel will be received in the notch of the locator or lock 31, and then the upward movement of these two parts is continued to the position indicated in Fig. 3. Then the shaft 32 is moved outwardly so as to unlock the drive gears. Then the value wheel on which the 5 had been registered is moved three steps, by hand or by suitable mechanism, so that the disks of such value wheel will then be in the position indicated in Fig. 3. Then the shaft 32 is brought inwardly so that the finger 33 will engage the notch between adjacent teeth, and such shaft is advanced about the axis of shaft 21 a half step, so that the value wheel will now be in a position corresponding to a value of 8½. During this movement, or subsequently, the corresponding duplex star-wheel and its pinion are rotated about the axis of shaft 27 one-sixteenth of a revolution. Then, while the drive gear is held locked by the finger or tooth 33, the shaft 27 and its parts, as well as the lock or director 31, are brought to the position shown in Fig. 5, that is, with one tooth of the disk 28 in engagement with the periphery of the disk 23. Then the lock or director 31 is retracted and moved back to its normal position. Then the shaft 27 is brought vertically down toward the shaft 21 into the position shown in Fig. 6, and during such movement of the shaft 27, the star-wheel, by the engagement of its one tooth with the disk, causes a one-sixteenth rotation of the pinion 30 as it comes into mesh with its companion drive-gear 22, which moves such gear back a half step, in effect counteracting or neutralizing the previous forward half-step which had been given to it by the rotation of the shaft 32 that amount around the axis of shaft 21. The extent of such rotation of the pinion is, of course, determined by the engagement of the second tooth of the star wheel with the same edge of disk 23. Stated differently, the coöperation of the disk and the star wheel effects the rotation of the pinion and the drive gear of the next higher value wheel. Then the parts will be in the position indicated in Fig. 6. That is to say, the lower value wheel will register 8, and there will have been no carrying to the next higher value wheel.

Let us now assume a condition in which there will be a carrying of a unit to the next higher value wheel. That is to say, let us add 7 to 5. As in the previous instance, we start with the parts as shown in Fig. 2, in which the lower value wheel registers 5. Then the transmitting device and its lock are moved

up as shown in Fig. 7, the bar 32 and its fingers 33 are retracted, and the lower value digit wheel is advanced seven points, bringing the disks 23 and 24 into the positions shown in Fig. 7, it being understood that the drive gear 22 of the next higher value wheel is not moved at that time. Then the transmitter is turned a sixteenth of a revolution by the lock or director 31, as shown in Fig. 8, and the gear 22 is advanced a half step by the movement of rod 32 and its finger 33. While the gear is still locked, the shaft 27 and the transmitter are brought down until one tooth of the rear star-wheel 29 engages the disk 24, as shown in Fig. 9. The lock or director 31 is carried back to its original position, and the shaft 27 and the transmitter brought down toward the shaft 21, which causes a rotation of the pinion 30 in a clockwise direction as the parts are viewed in Fig. 10. This motion is continued until pinion 30 contacts with the teeth of the gear-wheel and then rod 32 and its teeth are retracted. This rotation of the pinion is transmitted to the gear 22 of the next higher value wheel so as to advance such gear and its value wheel another half-step. That is to say, the half-step advance, brought about by the rod 32 and finger 33, is supplemented by the half-step given to the gear by the pinion 30, the result being a complete one-step movement of the higher value wheel, this operation representing the carrying of the unit from the lower value wheel to such higher value wheel. It should be observed that in this instance the gear is advanced a half step by the pinion, whereas, when there was no carrying, as illustrated in Figs. 2 to 6, the gear was moved back a half step. This is due to the disposition of the teeth of the duplex star-wheel and their relation to the peripheries of the two semi-circular disks with which they coöperate.

When the disks reach the 9 position, the situation is somewhat peculiar, and in order to explain it, let us assume that we add 0 to 9 already registered on the value or digit wheel. We start with the parts as illustrated in Fig. 11, with 9 registered on the value or digit wheel associated with the two disks illustrated. The first operation is to retract shaft 27 of the transmitter and rotate the latter one-sixteenth of a revolution. The gear 22 of the next higher value wheel is moved forward a half step by the travel of rod 32 and its fingers 33, and then the canted transmitter is brought down to the other parts, as shown in Fig. 12. The fingers 33 are withdrawn and the shaft 27 and its parts still further approached to the shaft 21. Inasmuch as the two teeth 101 and 102 of the two star wheels 28 and 29 are both opposite spaces of their respective disks, the star wheels will mesh with their disks without rotation of either part. That is to say, the star wheels and their disks will interfit like two gears without backlash, and whether or not the gear 22 is to be fed forward another half-step to effect the carrying operation or to be moved back a half-step to neutralize the previous forward half-step will depend upon the condition of the next lower-value wheel on which 9 is not registered. If such lower-value wheel is to carry, it will effect the carrying through the value wheel under consideration on which 9 is already registered.

It is well known that in mechanism it is not always absolute movement that counts, but only relative movement. Thus, by inversion (that is, by the making of another link of a mechanical chain the stationary member thereof) another mechanism might be produced. In the above mechanism, the chain of parts is composed of the various elements specified and a suitable framework, not illustrated. In the structure so far described, such framework has been considered as held fixed in space. By simple inversion and by holding the numeral wheels fixed in space while producing the same relative movement as before during the time when the one-half step additional movement was given to the value wheels, the mechanism is inverted into another.

In Figs. 14 to 19, I have illustrated the operation of such a modified device. In these figures, the addition of 7 to 5 already registered on the value or digit wheel is illustrated. At the start, with the 5 registered, the parts are as illustrated in Fig. 14. Then the shaft 27 and the transmitting mechanism carried thereby are withdrawn into coöperative relation with the lock or director 31, the rod 32 and the fingers 33 are retracted, the value wheel (not shown) associated with the two disks is turned seven points, which is shown in Fig. 15, by the displacement of the two disks. Then the rod 32 and the fingers 33 are moved in so as to lock all of the drive gears. Then the shaft 27 is rocked around the axis of the shaft 21 one-fortieth of a revolution, representing a half-step movement. The duplex star-wheel and the gear 30 fixed thereto are also rotated about the axis of shaft 27 by the movement of the part 31 twenty-two and a half degrees, or one-sixteenth of a revolution, about shaft 27. Then this canted transmitter and its lock are brought radially inwardly toward the other parts until the teeth of one or the other of the star wheels engage the duplex disk, as shown in Fig. 17. Then the bar 32 and the fingers 33 are retracted and the director or lock 31 moved back to original position by being first moved out radially to release the teeth of the double star wheel without moving the latter and then brought back to its original position. Now the transmitter is moved still

farther toward the shaft 21, which causes the star wheel and the pinion to rotate in the clockwise direction indicated by the arrow of Fig. 18, effecting a half-step forward rotation of the drive-gear 22 of the next higher value wheel. As will be readily understood, this clockwise rotation of the star wheel and pinion is brought about by the fact that in the position of the parts shown in Fig. 17, one tooth of the star wheel 29 engages the disk 24, and as the shaft 27 moves toward the shaft 21, this contact between the two parts acts as a fulcrum, causing a rocking of such star wheel so as to bring two of its teeth into engagement with the periphery of the disk 24, the intermediate tooth of the other star wheel 28 being received in the space of the other disk 23. In this way a one-half step forward rotation of the drive gear of the next higher value wheel is effected, as is readily seen by the two positions of the tooth marked A of the drive-gear of such next higher value wheel, as illustrated in Figs. 17 and 18.

Obviously, if the disks had not passed the carrying point, then the star wheel 28 would have come in contact with its disk 23, and the drive gear of the next higher value wheel would have been moved back a half step, instead of advanced a half step.

Then the shaft 27, with the parts thus in mesh, is moved back to its original position directly above the shaft 21, which advances all of the drive gears 22 and all of the disks one-half step, as is indicated by the position of the tooth A in Fig. 19. This additional half-step forward movement supplements the previous half-step advance movement given to the gear 22, effecting a carrying of one unit to the next higher value wheel, and at the same time all of those gears 22 which had been previously moved rearwardly a half step are advanced to proper position.

The above description referred to the movement of the gear of the next higher value wheel. In Figs. 14 to 19 is clearly shown the movement of the disks belonging to the lower value wheel, and it is shown that said disks move rearwardly a one-half step during the meshing of the transmitter, (Fig. 18), and then move forwardly a half step during the rotation of the transmitter about the axis 21, (Fig. 19). This is on the assumption that said lower value wheel did not have any carrying into it, as, for instance, a unit wheel.

Stated somewhat differently, in the operation of the parts as illustrated in Figs. 2 to 10, inclusive, the universal forward half-step movement is first given to all of the drive gears 22 and their associated value wheels, and then subsequently these individual drive gears are either advanced a further half-step or moved back a half-step, in accordance with whether a carrying is or is not to be effected. On the contrary, however, in the operation of the device as indicated in Figs. 14 to 19, those of the gears which are to effect a carrying are first advanced a half step, and those which are not to effect a carrying are simultaneously shifted back a half-step, and then, later, the universal forward half-step is given to all of the parts at the same time. In the device as illustrated in Figs. 14 to 19, the selective forward and back half-step movements are occasioned by the intermeshing of the transmitting devices with the gears and disks, as illustrated in Figs. 17 and 18, and the universal forward half-step movement is brought about by the rocking of the shaft 27 and its parts around the axis of shaft 21 forwardly one-fortieth of a revolution, as illustrated by Figs. 18 and 19.

In these various figures, I have illustrated the movements of the drive gears 22, but I have not always attempted to show the movements of the disks 23 and 24, because their positions depend upon the action of a carrying mechanism of the next lower order. To be more explicit, in Fig. 4, I have shown the forward half-step movement of the gear 22 and of the disks 23 and 24, because when this universal movement is given to the parts it is given to all gears and all disks. In Fig. 6, I have illustrated a back half-step movement of the gear 22 because no carrying was transmitted to it, and I have also illustrated in such figure a corresponding back half-step movement of the disks on the assumption that no carrying had been transmitted to their value wheel and drive gear which is of the next lower order from that of the drive gear 22. If a carrying had been transferred to the value wheel of these disks, then the disks would have been advanced a half step, instead of retracted a half step, and there would have been a displacement between the disks and the gear 22 shown in Fig. 6, of one full step. In Fig. 10, I have illustrated the parts as though there had been a carrying to the gear 22, and a carrying also transmitted to the value or digit wheel associated with the disks 23 and 24. In Figs. 17, 18, and 19, I have illustrated the action of the parts as though there was a carrying to the drive gear 22 of the higher value wheel and no carrying to the value wheel of the disks 23 and 24 illustrated. That is to say, when the drive gear 22 is advanced a half step, as shown in Fig. 18, the disks are moved back a half step, which rearward movement, however, is counteracted by the additional, universal forward half-step movement shown in Fig. 19.

While in Figs. 18 and 19 I have illustrated the two steps of the meshing of the parts and the rotation of the transmitter around the axis of shaft 21 as separate operations, it is

to be understood that these can occur simultaneously, and under such circumstances no value wheel will be shifted except a carrying is transferred thereto, in which case it shifts forwardly one whole step. Under such circumstances for those value wheels to which no carrying is transmitted, there are two instrumentalities simultaneously at action, the one tending to shift them rearwardly and the other tending to turn them forwardly, which actions neutralize one another, so that the value wheels are not moved at all.

It should be clear that by holding the shaft 27 stationary and by swinging the shaft 21 about the axis of shaft 27, still another inversion of the mechanism may be produced. It will operate, however, similarly to the one above described.

The particular form of the mechanisms produced by the inversion of the same chain of parts which is most convenient will depend upon various circumstances, mainly the construction of the digit-inserting mechanism.

Attention is also called to the fact that during the approach of the shafts to each other some interference will be encountered between the transmitting devices and their lock or locator 31. The latter is, therefore, gradually removed from the star wheels during their engagement with the other parts.

It will be noticed that this is a remarkably simple mechanism for the summing of numbers, either in addition or subtraction. Considering each rigid piece as only one piece, the chain per decimal section is composed of only two pieces, namely, the value or digit wheel device and the transferring device; the former comprising three parts, the duplex disk, the digit wheel, and drive-gear; and the latter comprising two parts, the duplex star-wheel and pinion. This, of course, does not count the universal members, that is the shafts and locks. These universal members may be far more readily mechanically handled than the decimal members, and the shortening of the chain of the latter is very important. It should be observed, furthermore, that each value wheel is given a one-step movement, composed of a half-step plus and a half-step minus in case the wheel is not carried, and composed of a half-step plus and another half-step plus in case the wheel is carried. Since it requires exactly the same force to carry a wheel one-half step minus as to carry it a half-step plus, the amount of force required during the carrying is always a constant quantity, and is not variable, as in all other mechanisms that I am acquainted with.

Attention is also directed to the fact that during the digitation movement of the value or digit wheel there is no movement produced in the transfer or transmitting device. This is obvious when it is recalled that the latter at that time is at a distance from the value wheels. So far as I am aware, this structure and method of operation have never before been accomplished. It is important, as no provision need be made for any extra force in the digitation mechanism for any possible carrying. Again, it should be observed, that, even when the mechanism does carry, there is thrown upon the carrying mechanism the load of moving the wheel only one-half of a step, instead of a whole step.

The above described mechanism has been termed by me a summator, and not a totalizer. This term has been adopted because the operation of the device is mechanically radically different from any totalizer that I know of. Totalizers have been known in the art since 1650, and so far as I know, without exception, they had the following features: They all had at least a higher decimal member and a lower decimal member. The summater has the same. During the passage of the lower decimal member from 9 to 0 in addition, in all totalizers, some effect was produced upon another piece. This effect was ordinarily the movement of a transfer tooth by a carrying tooth forming part of the lower decimal member. It might also have been the movement of a pawl or a spring, or even an armature through the intermediation of an electric current, but without exception some movement was given to some other piece while the lower member was passing from 9 to 0. In the summator, no effect whatever is produced during such period. Again, taking a set of decimal members immediately after the insertion of the digits, if the machine be stopped and the parts examined, if all the parts have been previously marked so that identification would be possible, it will be found that in all totalizers there will be a set of pieces by the examination of the relative positions of which it could be determined whether their coöperating carrying members had carried or had not carried. No such action occurs in the summator. Again, in all totalizers, whenever carrying occurs, the carrying wheel that is carried is moved one whole step extra. Any wheel that is not carried is moved no step extra. In the summator, all wheels, whether carried or not carried, are moved one step extra. Finally, in totalizers, the extra movement of carrying brought about through the chain of decimal members is one step, and no movement is brought about universally. In the summator, the movement due to the chain of carrying is a half step, and a universal movement of a half step also occurs.

The above differences are fundamental and radical. There seems to be almost noth-

ing in common between all totalizers and the summator except digital insertion. The amounts of movement are different, their times are different, their order is different. In order to differentiate between all of the old mechanisms, which work alike, and this mechanism, which is different from the preceding, I have called it a summator.

In describing the various operations of the embodiments of the invention set forth above, the addition of numbers has been referred to and indicated. In case it is desired to subtract numbers, the various operations are similar, but performed in the opposite directions. That is to say, for instance, in the device shown in Figs. 2 to 6, inclusive, the transmitting device, instead of being rocked to the right, as shown in Fig. 4, would be rocked to the left; and the bar 32 and the fingers 33, instead of advancing the gears in a counter-clockwise direction, as shown in Figs. 2 to 6, would move them the half step in the opposite direction.

For the sake of clearness in the preceding description the mechanical means by which the parts are actuated has not been presented, since any suitable structure may be employed for that purpose. By way of illusaration, however, I will describe a simple and convenient operating mechanism for the parts of the device as shown in Figs. 1 to 6 inclusive, reference being had to Figs. 20 and 21.

The framework 100 of the appliance has bearings for a main operating-shaft 101 equipped with a turning handle 102, it being understood that during one turn of this shaft all of the required movements of the parts throughout one complete cycle take place. This frame-work also supports a fixed rod or shaft 103 and also shaft 21.

Each end of shaft 27 is supported by a pair of links 104, 105, in the enlarged ends 106 of which the shaft is revolubly accommodated. The other end of link 104 is pivoted to an end of a lever 107 fulcrumed on shaft 103, the opposite end of the lever having a roller 108 riding on the edge of the cam 109 fixed to shaft 101. Similarly, link 105 is pivoted to a lever 110 likewise fulcrumed on shaft 103 and having a roller 111 bearing on came 112 fixed to shaft 101. In order to assure that these two rollers will, at all times contact with their cams, the two levers are pulled together or toward one another by a spring 113.

Obviously, by giving the cams 109 and 112 the proper shape the desired movement of shaft 27 can be readily effected, and the parts are so proportioned, shaped, and arranged, that a single turning of the operating handle 101 will bring about the desired movement of the various elements of the machine.

The notched shaft or lock 31 is similarly supported on links 114 and 115 pivoted to levers 116 and 117 respectively, these levers having rollers 118 and 119 contacting with cams 120 and 121 fixed to and revoluble with shaft 101. A spring 122 connecting together these two levers holds their rollers in proper association with the edges of the cams.

By these instrumentalities the proper and desired movement of the part 31 is brought about. It should be observed, however, that the notch of this part 31 should at all times face the axis of shaft 27 and, consequently, during its various movements, it is necessary to maintain this shaft by slightly rotating it in the desired relation to the teeth of the wheels 28 and 29. This is brought about by means of a bar 123 keyed to the shaft 31 and having a bifurcated end 124 straddling shaft 27. Because of this arrangement of parts, the notch of the lock will always face the axis of shaft 27 regardless of whatever its movement bodily may be.

The rod or shaft 32 is similarly supported at each end by a pair of links 125 and 126 pivoted to the ends of levers 127 and 128 fulcrumed on the stationary shaft 103 and bearing at their opposite ends rollers 129 and 130 riding on the edges of cams 131 and 132 fixed and revoluble with shaft 101.

In order to maintain the tooth 33 of the rod or shaft 32 properly directed toward the spaces between the teeth of the gear with which it coöperates, the shaft 32 has keyed thereto a bar 133, the lower end of which is divided at 134 to straddle the shaft 21. To maintain the lever arms 127 and 128 in such positions that their rollers will always contact with their cams, they are connected together by the usual coil springs 135. Since both ends of each of these shafts are supported in the manner indicated, it is merely a matter of choosing appropriately-shaped cams to effect the desired movements. These cams have been shown more or less diagrammatically in the accompanying illustration, no attempt having been made to show them in exact proportion, size and shape.

One complete rotation of shaft 101 by its operating-handle 102 causes all the parts of the mechanism to perform their complete cycle of operations.

The invention is not limited to the exact and precise features of construction herein illustrated and described, but is capable of a variety of embodiments, and it is to be understood that many minor mechanical changes may be made in the structure shown without departure from the substance of the invention and without the sacrifice of any of its substantial benefits and advantages.

Inasmuch as the various movements of the parts can be effected in different sequence or simultaneously, as indicated above, the order in which the elements occur in the appended claims is not to be interpreted necessarily as the order in which they operate.

This application is a continuation of my co-pending application Serial No. 731,458, filed November 14, 1912.

I claim:

1. In a device of the character described, the combination of movable digit members of different values, means adapted to effect a partial carrying movement of one of said digit members, and a second means adapted either to supplement the action of said first means to effect a complete carrying movement of said digit member, or counteract the action of said first means, the selective action of said second means being determined by the condition of the digit member of next value, substantially as described.

2. In a device of the character described, the combination of a revoluble lower-value digit-wheel, a revoluble higher-value digit-wheel, a drive gear for said higher-value wheel, a pinion adapted to be moved into and out of mesh with said gear, means to turn said gear a partial carrying rotation, and means controlled by said lower-value wheel and associated with said pinion to turn said gear by said pinion to complete the carrying movement or counteract such partial-carrying rotation, substantially as described.

3. In a device of the character described, the combination of a revoluble lower-value digit-wheel, a revoluble higher-value digit-wheel, a carrying driving means for said higher-value wheel adapted to give such wheel a partial carrying movement, and means including a mutilated disk associated with said lower-value wheel and a coöperating star-wheel adapted either to complete the partial carrying movement of said higher-value wheel or to counteract such partial movement, substantially as described.

4. In a device of the character described, the combination of a revoluble lower-value digit-wheel, a revoluble higher-value digit-wheel, a drive gear connected to said higher-value wheel, a pinion adapted to co-act with said gear, means adapted to give said higher-value wheel a partial carrying movement, and means associated with said pinion and lower-value wheel, and including a duplex mutilated-disk with staggered portions and a duplex star-wheel with staggered teeth, adapted by the turning of said pinion and gear either to complete said carrying movement or to counteract such movement, substantially as described.

5. In a device of the character described, the combination of a revoluble lower-value digit-wheel, a revoluble higher-value digit-wheel, a drive-gear for said higher-value wheel, a pinion adapted to be shifted into and out of mesh with said gear, means governed by said lower-value wheel adapted to cause said pinion during the meshing of the pinion and gear to turn the latter and the higher-value wheel forwardly or rearwardly, and means adapted to turn such gear and higher-value wheel forwardly to increase or counteract the movement given thereto during the pinion-meshing operation, substantially as described.

6. In a device of the character described, the combination of a revoluble lower-value digit-wheel, a revoluble higher-value digit-wheel, means adapted to move said higher-value wheel a forward half-digit step, and means adapted either to move said higher-value wheel a further forward half-digit step to complete the carrying operation or to move said higher-value digit-wheel rearwardly a half-digit step to counteract the partial carrying movement, substantially as described.

7. In a device of the character described, the combination of a plurality of numeral or digit wheels, and a carrying mechanism for each pair of said wheels including a transfer device constructed to be moved out of coöperative relation with all the digit wheels during the reception of the digits on any thereof, substantially as described.

8. In a device of the character described, the combination of a plurality of numeral or digit members, and carrying devices between said members, constructed to provide an amount of movement substantially the same regardless of whether or not they effect a carrying, substantially as described.

9. In a device of the character described, the combination of a plurality of numeral or digit wheels, and carrying devices between said wheels constructed to offer no resistance during the complete digital insertion on all of said wheels, substantially as described.

10. In a device of the character described, the combination of a plurality of numeral or digit wheels, and carrying devices for said wheels having an equal amount of movement whether carrying takes place or not, substantially as described.

11. In a device of the character described, the combination of a plurality of members of different values all adapted to simultaneously receive digital values and each provided with carrying means to transfer the tens to the next member, said carrying means including transfer devices each composed of a single member all parts of which are rigid with one another, said single transfer devices constituting all the transfer mechanism between said digit members, substantially as described.

12. In a device of the character described, the combination of movable numeral or value members each provided with twenty teeth and two semicircular disks, and transfer devices to transmit the tens from said numeral or value members by co-action with said disks, said transfer member being simultaneously completely disconnected from said value members during the reception of the digits, substantially as described.

13. In a device of the character described, the combination of revoluble numeral or value wheels each provided with a plurality of arcuate disks, each arc corresponding to ten steps of the value member, and the arcs for the adjacent groups of ten steps being non-consecutive, and transfer devices to transmit the tens from said value wheels to the value members of the next higher order, by co-action with the disks of the lower value wheels, all of said transfer devices being completely disconnected from the value wheels during the insertion of the digits thereon, substantially as described.

14. In a device of the character described, the combination of revoluble numeral or value wheels each provided with a plurality of non-consecutive arcs, each arc corresponding to ten steps of the value wheel, and transfer devices to transmit the tens from said value wheels to the value wheels of the next higher order, said transfer devices being provided with a plurality of teeth, one tooth for each ten steps of the value wheel, the teeth of the transfer device being staggered to cooperate with the non-consecutive arcs, all of said transfer devices being completely disconnected from the value wheels during insertion of the digits thereon, substantially as described.

15. In a device of the character described, the combination of a decimal set of numeral or value members, and means to give all of said value members a movement all in the same direction preliminary to and independent of any subsequent carrying operation, substantially as described.

16. In a device of the character described, the combination of a decimal set of numeral or value members, and means adapted to give all of said value members a one-half step movement all in the same direction preliminary to and independent of any subsequent carrying operation, substantially as described.

17. In a device of the character described, the combination of a decimal set of numeral or value members, and means adapted to give all of said value members a simultaneous one-half step movement all in the same direction preliminary to and independent of any subsequent carrying operation, substantially as described.

18. In a device of the character described, the combination of a set of numeral or value members, a decimal set of transfer devices, and mechanism part on the value members and part on the transfer devices, and operating during the approach of said transfer devices and value members to (*a*) move one-half step forward each value member whose next lower-value member has passed through the carrying point, (*b*) to move one-half step backward each value member whose next lower-value member has not passed through the carrying point, and (*c*) to hold against movement any value member whose next lower value member is at the carrying point, substantially as described.

19. In a device of the character described, the combination of a decimal set of numeral or value members, means for moving the set as a totality one-half of a step, and means for (*a*) advancing one-half a step each value member whose next lower value member has passed through the carrying point, (*b*) retracting each carrying member one-half a step whose next lower value member has not reached its carrying point, and (*c*) holding each value member whose next lower value member is at the carrying point, substantially as described.

20. In a mechanism of the character described, the combination of a pair of movable members of lower and higher value, a carrying device associated with said lower value member, and a transfer device adapted to be operated by said carrying device and to be completely disconnected from said carrying device during the insertion of the digit on said lower value member, substantially as described.

21. In a mechanism of the character described, the combination of a set of numeral or value members, a set of devices adapted to transfer the tens between said members, and means to simultaneously disconnect said devices from said members preceding the reception of digital values by the latter, the positions alone of said members controlling the operations of said devices, substantially as described.

HYMAN ELI GOLDBERG.