PCT WORLD INTELLECTUAL PROPERTY ORGANIZATION
International Bureau

INTERNATIONAL APPLICATION PUBLISHED UNDER THE PATENT COOPERATION TREATY (PCT)

(51) International Patent Classification 5 :		(11) International Publication Number:
B01J 19/08	A1	WO 94/14531
		(43) International Publication Date: 7 July 1994 (07.07.94)

(21) International Application Number: PCT/US93/12153

(22) International Filing Date: 14 December 1993 (14.12.93)

(30) Priority Data:
07/992,614 18 December 1992 (18.12.92) US

(71) Applicant: ZAPIT TECHNOLOGY, INC. [US/US]; 2880 Lakeside Drive, Suite 320, Santa Clara, CA 95054 (US).

(72) Inventors: SCHONBERG, Peter, R.; 217 Bel Air Drive, Scotts Valley, CA 95066 (US). HOBERT, George, G.; 94 Selby Lane, Atherton, CA 94027 (US). SCHONBERG, Russell, George; 12386 Melody Lane, Los Altos Hills, CA 94022 (US). FADNESS, David Richard; 445 Stratford Park Court, San Jose, CA 95136-2031 (US).

(74) Agent: COLE, Stanley, Z.; 26620 St. Francis Road, Los Altos Hills, CA 94022 (US).

(81) Designated States: AT, AU, BB, BG, BR, BY, CA, CH, CZ, DE, DK, ES, FI, GB, HU, JP, KP, KR, KZ, LK, LU, MG, MN, MW, NL, NO, NZ, PL, PT, RO, RU, SD, SE, SK, UA, VN, European patent (AT, BE, CH, DE, DK, ES, FR, GB, GR, IE, IT, LU, MC, NL, PT, SE), OAPI patent (BF, BJ, CF, CG, CI, CM, GA, GN, ML, MR, NE, SN, TD, TG).

Published
With international search report.

(54) Title: TRANSPORTABLE ELECTRON BEAM SYSTEM AND METHOD

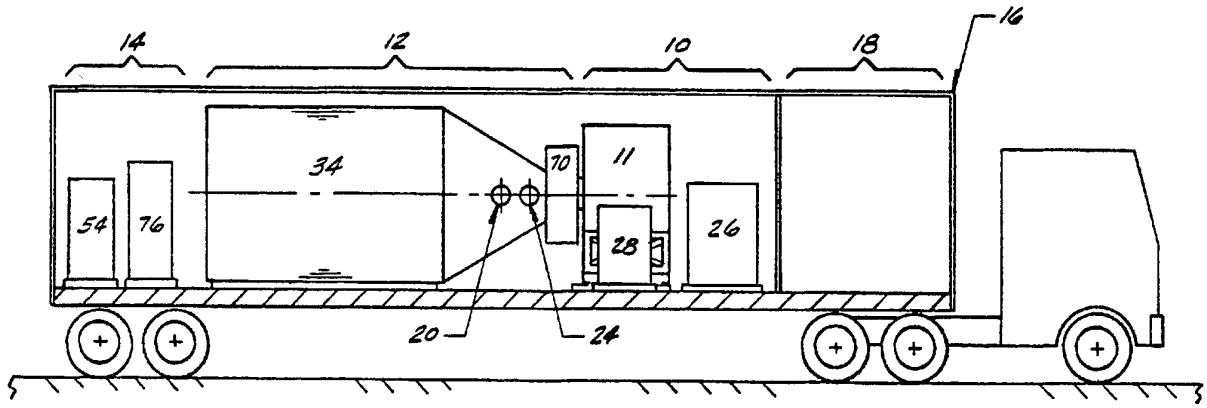

(57) Abstract

The invention is a transportable and reconfigurable system and method designed for on-site conversion of toxic substances to nontoxic forms. The invention includes an electron beam generator (11), a reaction chamber (32), and effluent post-processing modules (14) mounted on a carrier (16) for transporting the system from site to site.

FOR THE PURPOSES OF INFORMATION ONLY

Codes used to identify States party to the PCT on the front pages of pamphlets publishing international applications under the PCT.

AT	Austria	**GB**	United Kingdom	**MR**	Mauritania
AU	Australia	**GE**	Georgia	**MW**	Malawi
BB	Barbados	**GN**	Guinea	**NE**	Niger
BE	Belgium	**GR**	Greece	**NL**	Netherlands
BF	Burkina Faso	**HU**	Hungary	**NO**	Norway
BG	Bulgaria	**IE**	Ireland	**NZ**	New Zealand
BJ	Benin	**IT**	Italy	**PL**	Poland
BR	Brazil	**JP**	Japan	**PT**	Portugal
BY	Belarus	**KE**	Kenya	**RO**	Romania
CA	Canada	**KG**	Kyrgystan	**RU**	Russian Federation
CF	Central African Republic	**KP**	Democratic People's Republic of Korea	**SD**	Sudan
CG	Congo			**SE**	Sweden
CH	Switzerland	**KR**	Republic of Korea	**SI**	Slovenia
CI	Côte d'Ivoire	**KZ**	Kazakhstan	**SK**	Slovakia
CM	Cameroon	**LI**	Liechtenstein	**SN**	Senegal
CN	China	**LK**	Sri Lanka	**TD**	Chad
CS	Czechoslovakia	**LU**	Luxembourg	**TG**	Togo
CZ	Czech Republic	**LV**	Latvia	**TJ**	Tajikistan
DE	Germany	**MC**	Monaco	**TT**	Trinidad and Tobago
DK	Denmark	**MD**	Republic of Moldova	**UA**	Ukraine
ES	Spain	**MG**	Madagascar	**US**	United States of America
FI	Finland	**ML**	Mali	**UZ**	Uzbekistan
FR	France	**MN**	Mongolia	**VN**	Viet Nam
GA	Gabon				

TRANSPORTABLE ELECTRON BEAM SYSTEM AND METHOD

Background of the Invention

This invention relates generally to the processing and/or chemical conversion of gases, vapors, aerosols, and suspended particulates using electron beams. These terms are used interchangeably herein and it should therefore be understood that if the word gas is used in the specification or the claims, it is intended to mean gas or gases, vapor or vapors, aerosol or aerosols and suspended particulates. In particular, this invention relates to a transportable system for the conversion of toxic waste, especially volatile organic compounds, to environmentally acceptable compounds or elements.

As products and by-products of industrial processes, toxic organic compounds contaminate our air, soil, and groundwater. Industrial processes continue to generate toxic organic compounds, thereby adding to the existing contamination. Toxics created by incinerators, rotary kilns and bioreactors are also major sources of contamination. Recognition of this problem has led to the development of diverse extraction, collection, and disposal methods to reverse the effects of past contamination and to reduce future contamination of the environment.

Air stripping and vacuum extraction are dispersion technologies which extract contaminants from soil and

groundwater. However, venting contaminants directly to the atmosphere is environmentally undesirable. Processing of the contaminants before release or disposal is required and is addressed by this invention, as discussed below.

Carbon containment is a collection technology in which contaminants are passed through carbon (or other adsorbent) filled canisters to adsorb the contaminants. In remediation systems for removal of volatile organic compounds from soil and groundwater, contaminants may be removed from the ground or groundwater by vacuum extraction or air stripped. In effluent treatment systems typically found at refineries or chemical plants, the contaminants may be the discharge of an industrial process. In these various systems, volatile organic contaminants are adsorbed onto carbon, while the remaining portion of the extracted air, steam, or process effluent is released to the environment along with any contaminants the carbon fails to remove. Carbon canisters with adsorbed toxics pose a disposal problem of their own, which is further complicated by the transport problem to move canisters to a treatment facility. In addition, containment of the adsorbed toxics, whether kept in a single location or moved, is not universally effective, as some volatile organic compounds and other pollutants have low adsorptivity.

Incineration is a technique used to destroy contaminants

through high-temperature burning. As with carbon containment systems, the vapors may come from vacuum extraction wells, air strippers, or industrial process effluent. Destruction of these contaminants by incineration is often incomplete, however, and incomplete destruction can be expected to produce (and release to the atmosphere) compounds more hazardous than the original contaminants. Furthermore, incineration is often undesirable at refineries and chemical plants because of the dangers presented by the proximity of flammable substances to the incinerator's high temperatures. Moreover, and clearly in populated areas, incineration is politically and socially undesirable.

Summary of the Invention

Electron beams are used to process or convert toxic and nontoxic compounds to different compounds or elements. Influents consisting of gases, aerosols, and/or suspended particulates enter a reaction chamber (or transformation plenum) into which a beam of electrons is injected. These electrons interact with the influent to chemically transform compounds into elements or other compounds.

Electron beams have previously been used to reduce emissions of sulfur oxides (SO_x) and/or nitrogen oxides (NO_x) from conventional power plant facilities. Each power plant effluent treatment system is designed to operate with a single power plant. These systems are

stationary and permanently fixed in one place. They are not transportable. Moreover, since the composition of a power plant's effluent is relatively unchanging, prior-art effluent treatment systems were not designed to be easily reconfigured.

Electron beam radiation has also been used to convert organic contaminants in drinking water to nontoxic forms. Like the power plant effluent treatment systems, however, water treatment facilities are not designed to be transportable. Rather, prior-art electron beam water treatment systems are designed to meet the requirements of a single water treatment plant. Thus, the prior art does not address the problems of transportability of an electron beam system from site to site or the adaptability of the system to the needs of each particular site.

The invention described herein is a transportable and reconfigurable electron beam conversion system. In the preferred embodiment, an electron beam generator and a reaction chamber are mounted on a trailer (or other vehicle) along with any influent preprocessing modules (such as particulate filters, moisture traps, heaters, coolers, pumps, orifices, nozzles, and/or valves), effluent post-processing modules (such as a carbon canister and a caustic scrubber for hydrochloric acid) and system instrumentation and controls. Influent gases from a vacuum extraction system or other source are fed to the

system, and any undesirable compounds in the gases are either transformed to benign elements or compounds or are removed (or further transformed) by the effluent treatment modules. The system may be moved from site to site and is designed to meet all applicable highway weight and size restrictions. In addition, the system's elements are easily reconfigured to meet the specific requirements of each toxic waste site.

The invention is described in more detail below with reference to the drawings.

Brief Description of the Drawings

Figure 1 is a plan view of an electron beam conversion (conversion, treatment, transformation and reaction are words used interchangeably to describe the plenum chamber and/or its operation in accordance with this invention) system according to the preferred embodiment of this invention.

Figure 2 is a side elevation view of the electron beam conversion system of Figure 1.

Figure 3 is a schematic cross-sectional view of the reaction chamber subsystem and electron beam source of this invention.

Figure 4 is a schematic process flow chart showing the

electron beam conversion system of this invention.

Detailed Description of the Preferred Embodiment

Figures 1 and 2 show top and side views of a transportable electron beam conversion system according to this invention. An electron beam generator subsystem 10, a transformation subsystem 12, and influent pre-processing and effluent post-processing modules 14 are mounted in an enclosed trailer 16. The instrumentation and controls required to monitor and operate the system may be located in a control room 18 at one end of trailer 16. Control room 18 has suitable protection for its occupants from radiation and airborne hazards.

Influent (*e.g.*, untreated material) enters the system through inlet pipes 20. Effluent from the transformation subsystem 12 and optional effluent post-processing modules 14 leaves the system through outlet stack 24. Thus, the entire toxic remediation system is contained in trailer 16.

Performance and efficiency of the electron beam conversion system are dependent upon many interrelated factors, including the shape, dimensions, and total volume of the reaction chamber; the density and density distribution of the reaction chamber contents; and the characteristics of the electron beam, such as its cross-sectional dimensions, the pattern of directions of the

incident electrons, the kinetic energies and energy distribution of the electrons, the peak and average power of the beam, and the dose rate. In addition, the system's performance may be enhanced by the generation of secondary electrons upon collision of electrons in the incident beam with the chamber and/or chamber contents.

In the preferred embodiment, electron beam generator subsystem 10 is a 2.5 MeV pulsed linear electron accelerator 11. This unit includes a high-vacuum cylindrical envelope which contains an electron gun comprising an electron source (heated cathode), accelerating electrode (anode), and a control electrode (grid). The electron gun injects electrons into an evacuated waveguide which includes a series of resonant cavities in which the electrons are accelerated sequentially, using energy derived from a pulsed microwave source. In the preferred embodiment, the microwave source is a magnetron. A modulator 26 contains pulse generating components. The subsystem also includes heat exchanger 28 for cooling some elements of the subsystem.

The preferred embodiment employs a microwave-pulsed linear electron accelerator to meet the size, power, and weight requirements of the transportable conversion system. Other electron beam sources may be used, however, without departing from the scope of this

invention. For example, linear induction accelerators have been used in the laboratory with limited success and may be used in this application if the requirements for transportability and reliability are met. As another example, electron sources in which electron energy is determined solely by power supply voltage, without microwave or induction boost, can also be used if the transportability and reliability requirements are met. In the preferred embodiment, the average beam power may be made adjustable and the modulator may also be selected to permit modifications to adjust the peak beam power.

Figure 3 is a schematic cross-sectional view of transformation subsystem 12 as well as a portion of the electron beam generator subsystem 10, particularly the output end of accelerator 11. In order to maintain the interior of accelerator 11 under a high vacuum, an accelerator vacuum window 30 (preferably 1 to 2 mils titanium) is positioned at the accelerator outlet. Other materials may be used (such as stainless steel, beryllium or ceramics) and other material thicknesses may be used for window 30 without departing from the scope of this invention. The goal in selecting a material and thickness for window 30 is to provide a desired scatter angle (as discussed below) and low energy loss while still maintaining a vacuum and good thermal conductivity to reduce thermal stresses generated in the window by the electron beam. Thickness of window 30 will depend on the

power and energy of the electron beam source, the density of the material chosen for the window, and mechanical stresses created in the window during operation of the system.

The effective electron beam diameter may be enlarged, for example by use of quadrapole coils 27, thereby reducing thermal stresses by distributing beam power over a larger area of the window. Window 30 may also be water cooled to prevent overheating. The electron beam from accelerator 11 travels through window 30 into a small chamber 29 before passing into the interior of transformation subsystem 12. Chamber 29 is purged by a non-reactive gas such as nitrogen to eliminate ozone produced by the interaction of electrons with oxygen and to aid in cooling the window.

Exposure of window 30 to the material in chamber 32 could threaten the integrity of the vacuum in accelerator 11, thereby adversely affecting system performance. In the preferred embodiment, therefore, a second window 36 is disposed between window 30 and the interior of chamber 32 to prevent any contact between material in chamber 32 and window 30. Window 36 may be formed from sapphire, mica, ceramic, or other material resistant to the acids that may be generated in the transformation process. The thickness of window 36 depends on, among other things, the material chosen and the operating pressure within

chamber 32. In the preferred embodiment, window 36 is formed from 3 mil thick sapphire. In addition, chamber 29 is maintained at a pressure greater than the reaction chamber pressure to inhibit backflow of material from the reaction chamber toward window 30 in case of breach or failure of window 36.

In an alternative embodiment, window 36 is omitted and noncontaminated flowing gas (such as air) is used to prevent contact between the reaction chamber contents and window 30.

Radiation shielding reduces to safe levels the emission of Xrays or other radiation generated by collisions of electrons with materials in their paths. For example, shield 70 surrounds the outlet nozzle of the accelerator. Shielding may be formed from steel, concrete, lead, or any other suitable material. Other shielding is placed around the system as needed to meet with regulatory requirements and to permit it to be safely operated in the presence of people.

Transformation subsystem 12 includes a self-shielded, chemically resistant transformation plenum comprising a reaction chamber 32 of nonmetallic material such as porcelain, polyethylene, polyurethane, or resin-impregnated fiberglass surrounded by an exterior shell 34 of shielding material such as steel. The material chosen

for the reaction chamber depends on the application, but in any event should preferably minimize the creation of Xrays resulting from collisions with impinging electrons. Alternatively, the reaction chamber may be of steel or Inconel of sufficient shielding thickness or other metals if it is determined based on what is being processed that corrosion is not a likely problem. The purpose of shell 34 is to reduce to safe levels any Xrays generated by interaction of the electron beam with system components and contents of the reaction chamber. Shell 34 may also be formed from concrete, lead, or any shielding substance known in the art.

Chamber 32 may be formed by depositing a lining material on the interior surface of shell 34. Alternatively, chamber 32 may be removable from shell 34 for replacement of a reaction chamber with a new one made from the same material or, if the system is being reconfigured, with a chamber made from a different material adapted to the system's next application. In the preferred embodiment, chamber 32 and shell 34 are formed as separate elements. Suitable doors or ports are provided in chamber 32 and shell 34, respectively, to provide access to change chamber 32 from time to time and for cleaning and other maintenance.

The shape of reaction chamber 32 optimizes system performance while minimizing the size and weight of chamber 32 and its shield 34. Windows 30 and 36 will

cause the electron beam to scatter in varying degrees depending on the window material and thickness. In the preferred embodiment, therefore, reaction chamber 32 is narrow at the electron beam inlet and tapers outwardly to approximate the angle of beam divergence. This reduces the likelihood that untreated materials will bypass the electron beam. In the preferred embodiment, chamber 32 is conical with its narrow diameter at the electron beam inlet.

A cylindrical portion may be added at the larger end of the conical chamber to provide additional path length for the electron beam. Chamber 32 may also be made with a square or polygonal cross-section or of gradually increasing proportion, and may lead to a constant width portion at the large end. Length of reaction chamber 32 is determined by the effective penetration of the scattered electron beam, which, in turn, is determined by the energy of the electrons in the beam and the nature and density of the material within the chamber.

If one doubles the chamber pressure, density within the chamber is doubled and this reduces the electron beam path to about half of what was previously needed to accomplish transformation with the same efficiency, thereby approximately halving the required reaction chamber length. Of course, in such a case the chamber and associated elements will have to be structured to handle

the increased pressure.

Thus, the size and shape of the reaction chamber, the material and thickness of the windows, the pressure, temperature, mass flow rate and composition of the treated material, the power of the electron beam source, and the energy of the electrons in the beam are interdependent design parameters which may be altered to fit a particular application.

The preferred embodiment is designed to accommodate a continuous flow of treatable material through the system. Reaction chamber 32 is therefore designed to optimize contact between the electron beam and the flow stream. Influent from a source such as a vacuum extraction system, an air stripping system, an incinerator, a rotary kiln, a bioreactor or an industrial process and like systems enters reaction chamber 32 through inlets 20. Elbows 44 on the ends of inlet ducts 20 direct the influent initially into a swirling flow around the end of the chamber farthest from the electron beam source. The interaction of swirling influent with inlet ducts 20 and other baffles (not shown)within chamber 32 creates a turbulent flow swirling through the chamber. Exit ports 24 are located adjacent to window 36 at the small end of the chamber's cone. The turbulent flow of material from the far end of the chamber toward the electron beam source maximizes interaction between the electron beam and the flowing

material, thereby maximizing overall system efficiency. Additional inlets 41 may be used to add catalysts and/or water to the reaction chamber to aid in the transformation process. Alternatively, the inlet ducts may be placed at other locations, such as at the bottom of the reaction chamber, without departing from the scope of the invention. In a like sense the outlet ducts also may be placed at different locations without departing from the spirit of this invention.

As shown in Figure 4, the system can also be used in a batch mode wherein the reaction chamber is filled with untreated material, valves 3 and 4 are closed, and the trapped material is treated with the electron beam to transform the contents to other elements and compounds. This "batch" of treated material is thereafter evacuated to the effluent post-processing modules (if post-processing is required) before release.

Figure 4 is a process flow diagram which shows a possible configuration of influent preprocessing and effluent postprocessing modules. Untreated material from source 78 driven by pump 70, enters filter system 76, moisture trap 74, and thermal device 76, before entering reaction chamber 32 via inlets 20 (Figure 3). It is noted that pump 70 may be positioned on the otherside of plenum or reaction chamber 32. This path or an alternate selected by the operator may be followed depending on the objectives

and needs at a particular site. These elements are used to provide influent preprocessing as needed to maintain and optimize the conversion process. If the influent material is not a gas, influent may be directed through atomizer 14 prior to entering reaction chamber 32. A reagent may be added from reagent source 82 to enhance chemical reactions.

Treated material from reaction chamber 32 may be directed via ports 24 to a conventional scrubber system 50 to post-process any acids formed during the transformation process. The scrubbed material may then be directed to vessels 52 and/or 54 containing conventional adsorption materials (such as activated carbon in granular form) to trap any residual undesired material and to serve as a backup system in the event that the electron beam is deactivated prematurely. An inert gas such as nitrogen from a source 62 may be used to purge chamber 29.

With an interest in providing a full disclosure of different ways of operating the system of this invention, various conditions and the operating parameters will now be described.

A. Continuous Flow from Source; Treatment of Effluent with Caustic Scrubber and Granular Activated Carbon:

Close valves 7, 8, 9, 10, and 17.

Open valves 1, 2, 3, 4, 5, 6, and 12.

Start E-Beam.

Start Pump 70.

B. Continuous Flow plus Catalyst and Treatment of Effluent (as in A):

All valves set as in A above.

Open valve 17.

Start E-Beam.

Start Pump 70.

C. Continuous Flow plus Condensate from Plenum Plus Treatment of Effluent (as in A):

All valves set as in A.

Liquid Level Sensor opens valve 13 and starts Pump/Atomizer 14.

Start E-Beam.

Start Pump 70.

D. Continuous Flow Plus Condensate from Scrubber 50 Plus Treatment of Effluent (as in A):

All valves set as in A.

Liquid Level Sensor Opens valve 15 and starts Pump/Atomizer 14.

Start E-Beam.

Start Pump 70.

E. Batch Processing with Effluent Treatment:

Close valves 4, 7, 8, 9, 10, 16, and 17.

Open valves 1, 2, 3, 5, 6.

Start Pump 70.

Close valve 3 and stop Pump 70 when desired pressure is reached inside the plenum.

Begin E-Beam. Run required Total Electron Dose.

Open valve 4.

Close valve 2.

Open air valve 16.

Start Pump 70.

F. Supply toxics are liquid, with Treatment as in A:

Connect source line to Pump/Atomizer 14.

Close valves 1, 2, 8, 9, 10, 13, 17.

Open valves 3, 4, 5, 6, and 16.

Start E-Beam.

Start Pump 70.

Start Pump/Atomizer 14.

G. Only Scrubber 50, No Carbon, with Effluent Treatment as in A:

Close valves 6, 8, 9, 10, 13, 16, and 17.

Open valves 1, 2, 3, 4, 5, 7.

Start E-Beam.

Start Pump 70.

H. Only Carbon (52 and/or 54), No Scrubber 50:

Close valves 5, 10, 16, and 17.

Open valves 1, 2, 3, 4, 5, 6, 8, and/or 9.

Start E-Beam.

Start Pump 70.

These examples, which should be understood are exemplary only and not inclusive, are intended to give an understanding of the flexibility of the system of this invention.

In addition, provision may be made to remove or treat (if desired) any sludge or condensate that may form in reaction chamber 32. Valve 13 and sump drain line 31 will drain condensate and sludge from a sump or collector in the chamber and into the inlet gas stream via atomizer 14. Effluent from scrubber 50 may be treated in the same way.

Influent and effluent gases may be monitored on-line by flow sensors and chemical analysis sensors to determine the composition, temperature, and pressure of input and output material. Operation of the electron beam source may also be monitored by measuring the electron beam current using a current detector torroid 61 surrounding the output beam. Analytical instruments and monitoring equipment may be located in equipment room 18 along with system controls. Computers and computer software may be used in system control. Provision may also be made to control the entire system from a remote location.

The transportable electron beam conversion system of this invention runs on AC power. If there is no suitable power supply at the conversion site, an AC power generator may be added onto the transport mechanism as to provide total independence to the system.

No two toxic waste sites are the same. Each site has different contaminants in varying amounts. In addition, requirements to clean up a given site can change over time.

The electron beam system of this invention is therefore designed to be both transportable from site to site and reconfigurable to meet the requirements of a particular site. System components are removably attached (such as by bolting) to the floor of the trailer. Thus, one reaction chamber can easily be removed and replaced with another of a different size or configuration; an electron beam source can be exchanged for another with lower or higher energy outputs; scrubbers and adsorption vessels can removed or supplemented.

Provision may also be made to protect the system components during transport. For example, in the preferred embodiment the mounting slides for the electron beam source permit the accelerator to be anchored away from the reaction chamber during transport, then moved and correctly aligned into position prior to use at clean-up sites. This feature also contributes to easy maintenance of the electron beam source.

In the preferred embodiment, the transformation process takes place at near ambient temperature. As an alternative, material in the reaction chamber may be at an elevated temperature, which in general increases the reaction rates of chemical processes. If the material source is a granular carbon regeneration system, for example, material driven off the adsorbent carbon may be at a high temperature. The transformation system may

also itself include means to change influent and/or reaction chamber temperature and/or pressure such as a heater, or a cooler, to help regulate the temperature of the transformation process, or a pump and controls to regulate the pressure of the plenum.

This invention may be used in applications other than toxic waste conversion, such as a step in an industrial process. Other modifications covered by this invention will be apparent to those skilled in the art.

We claim:

1. A transportable electron beam conversion system comprising:

an electron beam source;

a reaction chamber;

means for directing an electron beam from the electron beam source into the reaction chamber;

inlet means for admitting gas into the reaction chamber;

outlet means for removing gas from the reaction chamber; and

transport means for moving the electron beam source and the reaction chamber from one site to another.

2. The transportable electron beam conversion system of claim 1 wherein the transport means is adapted for use on public roads.

3. The transportable electron beam conversion system of claim 1 further comprising means for mounting the electron beam source and the reaction chamber on the transport means.

4. The transportable electron beam conversion system of claim 1 wherein the electron beam source is a pulsed linear electron accelerator.

5. The transportable electron beam conversion system

of claim 1 wherein the reaction chamber has a first end and a second end, the means for admitting an electron beam comprising a window adjacent the first end of the reaction chamber.

6. The transportable electron beam conversion system of claim 5 wherein the width of the reaction chamber at the first end is substantially smaller than the width of the reaction chamber at the second end.

7. The transportable electron beam conversion system of claim 6 wherein the reaction chamber has a substantially non-circular cross-section.

8. The transportable electron beam conversion system of claim 6 wherein the reaction chamber has a substantially circular cross-section.

9. The transportable electron beam conversion system of claim 1 further comprising effluent treatment means and means for delivering gas from the outlet means to the effluent treatment means, the transport means being further adapted to move the effluent treatment means along with the electron beam source and reaction chamber from one site to another.

10. The transportable electron beam conversion system of claim 9 wherein the effluent treatment means is an

adsorption system.

11. The transportable electron beam conversion system of claim 10 wherein the effluent treatment means further comprises a scrubber system.

12. The transportable electron beam conversion system of claim 9 wherein the effluent treatment means is a scrubber system.

13. The transportable electron beam conversion system of claim 1 wherein the inlet means further comprises influent treatment means.

14. A transportable and reconfigurable electron beam conversion system comprising:

transport means;

an electron beam source removably mounted on the transport means;

a reaction chamber removably mounted on the transport means;

effluent treatment means removably mounted on the transport means;

means for admitting an electron beam from the electron beam source into the reaction chamber;

reaction chamber inlet means for admitting gas into the reaction chamber; and

reaction chamber outlet means for removing gas from

the reaction chamber and admitting gas into the effluent treatment means.

15. The transportable and reconfigurable electron beam conversion system of claim 14 wherein the electron beam source is a pulsed linear electron accelerator.

16. The transportable and reconfigurable electron beam conversion system of claim 14 wherein the reaction chamber has a first end and a second end and the means for admitting an electron beam comprises a window adjacent the first end of the reaction chamber.

17. The transportable and reconfigurable electron beam conversion system of claim 16 wherein the width of the reaction chamber at the first end is substantially smaller than the width of the reaction chamber at the second end.

18. The transportable and reconfigurable electron beam conversion system of claim 17 wherein the reaction chamber has a substantially non-circular cross-section.

19. The transportable and reconfigurable electron beam conversion system of claim 18 wherein the cross section of the reaction chamber is substantially square.

20. The transportable and reconfigurable electron beam conversion system of claim 17 wherein the reaction

chamber has a substantially circular cross-section.

21. The transportable and reconfigurable electron beam conversion system of claim 14 further comprising shield means surrounding a portion of the reaction chamber.

22. The transportable and reconfigurable electron beam conversion system of claim 20 wherein the shield and the reaction chamber are formed as a single element.

23. The transportable electron beam conversion system of claim 14 further comprising effluent treatment means and means for delivering gas from the outlet means to the effluent treatment means, the transport means being further adapted to move the effluent treatment means along with the electron beam source and reaction chamber from one site to another.

24. The transportable and reconfigurable electron beam conversion system of claim 23 wherein the transport means comprises a single vehicle adapted for use on public roads.

25. An electron beam conversion system comprising:

an electron beam source;

a reaction chamber;

means for admitting an electron beam from the electron beam source into the reaction chamber;

inlet means for directing a flow for treatment into the reaction chamber;

effluent treatment means in the path of the flow following the reaction chamber;

means for delivering gas from the reaction chamber to the effluent treatment means; and

means for flowing the output of said effluent treatment means back to the reaction chamber for further processing.

26. The conversion system of claim 25 including instrumentation to measure flow rates.

27. The conversion system of claim 25 including instrumentation for chemical analysis.

28. The conversion system of claim 25 including transport means adapted for use on public roads.

29. The transportable electron beam conversion system of claim 28 wherein the effluent treatment means comprises a scrubber system and means for directing flow from the scrubber to the reaction chamber.

30. The transportable electron beam conversion system of claim 28 wherein means are provided for collecting substances accumulated in the reaction chamber and for directing those substances back into the reaction chamber

for treatment.

31. A method of assembling a transportable, self-contained electron beam conversion system comprising the following steps:

providing a transport means;

mounting an electron beam source on the transport means;

mounting on the transport means a reaction chamber for permitting an electron beam emitted by the electron beam source to enter the reaction chamber;

mounting on the transport means a reaction chamber gas inlet means for permitting gas from a source external to the transport means to enter the reaction chamber;

mounting effluent treatment means on the transport means; and

mounting on the transport means a reaction chamber gas outlet means for permitting gas from the reaction chamber to enter the effluent treatment means.

32. The method of claim 31 wherein the transport means is adapted for use on public roads.

33. The method of claim 31 wherein the effluent treatment means comprises an adsorption system.

34. The method of claim 31 wherein the effluent treatment means comprises a scrubber system.

35. A transportable electron beam conversion system of claim 1 including means to control the pressure of the reaction chamber during processing.

36. A transportable electron beam conversion system as claimed in claim 1 including means to control the temperature of the reaction chamber during processing.

37. An electron beam conversion system comprising:

an electron beam source;

a reaction chamber;

means for directing an electron beam from the electron beam source into the reaction chamber;

inlet means for admitting gas into the reaction chamber;

outlet means for removing gas from the reaction chamber; and

means to control the temperature of the reaction chamber during processing.

38. An electron beam conversion system comprising:

an electron beam source;

a reaction chamber;

means for directing an electron beam from the electron beam source into the reaction chamber;

inlet means for admitting gas into the reaction chamber;

outlet means for removing gas from the reaction chamber; and

means to control the pressure of the reaction chamber during processing.

39. A transportable vapor treatment system comprising a linear accelerator adapted to produce an electron beam, a reaction chamber, said accelerator and said chamber being positioned horizontally and mounted on a movable support platform, feed means to feed vapors for treatment into and through said reaction chamber, means to irradiate vapors in said reaction chamber with an electron beam from said linear accelerator, and means to flow vapors through said feed means into said reaction chamber and through said chamber during irradiation with said electron beam to chemically destroy volatile organic compounds in said vapor at an efficiency of above about 20%.

40. A system in accordance with Claim 37 in which the chamber comprises, at the beam input end, a cone configuration connected into a cylindrical portion which terminates at the other end of the chamber.

41. In a transportable treatment system for operation at normal atmospheric conditions to destroy volatile organic compounds removed from the ground in a vapor state comprising a plenum having a conical input end for the

entrance of an electron beam, the cone angle configured to reasonably correspond to the angle of scatter of an electron beam entering said plenum at said input end, a cylindrical portion extending from said conical portion to the other or far end of said plenum, said plenum having a length at least equal to about one-half the length the beam from an associated linear accelerator becomes fully dissipated, input means to input vapors for treatment into said plenum, means to flow said vapors through said plenum, output means connected to said plenum, said plenum being positioned on a movable support base with its long axis in a horizontal plane.

42. A movable toxic waste remediation system comprising a vapor extraction system to extract volatile organic compounds in vapor form from the ground, a detoxification plenum mounted on a transportable support base, means to feed extracted vapors from said extraction system to said plenum, means to generate a beam of electrons positioned on said transportable support base, means to inject said beam of electrons into said plenum to interact with the extracted toxic vapors therein causing chemical transformations and destruction of the volatile organic compounds in said extracted vapors, and means to release treated vapors from said plenum back into the air.

43. A system in accordance with Claim 42 in which the means to generate a beam of electrons is in the energy

range of 1 to 10 MeV.

44. A system in accordance with Claim 43 in which the means to generate a beam of electrons is in the energy range of 2 to 3 MeV.

45. A system in accordance with Claim 42 including means to create turbulent flow in said plenum of extracted vapors passing therethrough.

46. A system in accordance with Claim 42 in which the means to generate a beam of electrons includes an electron window at its output end and said plenum includes an electron window at the end into which the electron beam is directed.

47. A system in accordance with Claim 46 in which the electron windows are spaced as closely as possible to one another and means are provided to flow a non reactive gas therebetween.

48. The transportable and reconfigurable electron beam conversion system of claim 14 wherein means are provided to reconfigure said effluent treatment means.

49. The transportable and reconfigurable electron beam conversion system of claim 48 in which said means to reconfigure said effluent treatment means comprises valve

means.

50. The transportable and reconfigurable electron beam conversion system of claim 14 wherein means are provided to reconfigure said influent treatment means.

51. The transportable and reconfigurable electron beam conversion system of claim 50 in which said means to reconfigure said influent treatment means comprises valve means.

52. An electron beam system in accordance with claim 25 in which said effluent treatment means at least comprises adsorbent material.

53. An electron beam system in accordance with claim 52 in which said adsorbent material comprises activated carbon in granular form.

54. An electron beam conversion system for the transformation of volatile organic compounds comprising:

an electron beam source;

a reaction chamber;

means for directing an electron beam for said electron beam source into said reaction chamber;

inlet means for flowing a relatively continuous gas stream for treatment into said reaction chamber;

means for adding a reagent to said gas stream to

facilitate transformation of volatile organic compounds in said reaction chamber being treated therein; and

outlet means for removing a relatively continuous gas stream from said reaction chamber following irradiation by said electron beam within said reaction chamber.

55. An electron beam conversion system for the transformation of volatile organic compounds comprising:

an electron beam source;

a reaction chamber;

means for directing an electron beam for said electron beam source into said reaction chamber;

inlet means for flowing a relatively continuous gas stream for treatment into said reaction chamber;

means for adding a catylst to said gas stream to facilitate transformation of volatile organic compounds in said reaction chamber being treated therein; and

outlet means for removing a relatively continuous gas stream from said reaction chamber following irradiation by said electron beam within said reaction chamber.

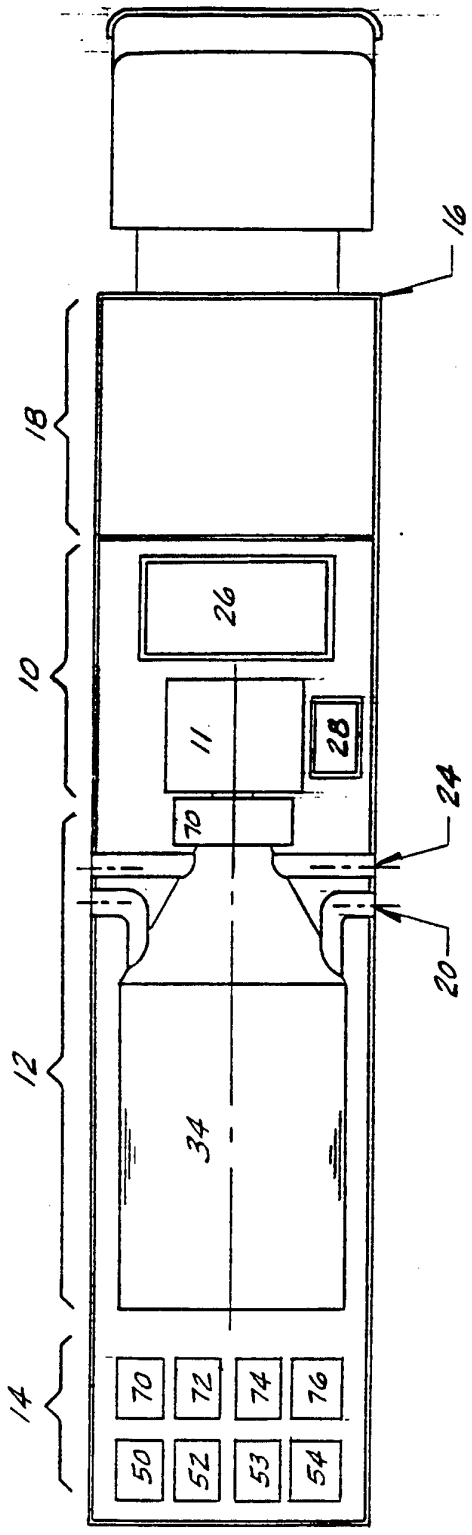
16
18
10
12
14
26
11
28
70
24
20
34
70
72
74
76
50
52
53
54

Fig. 1

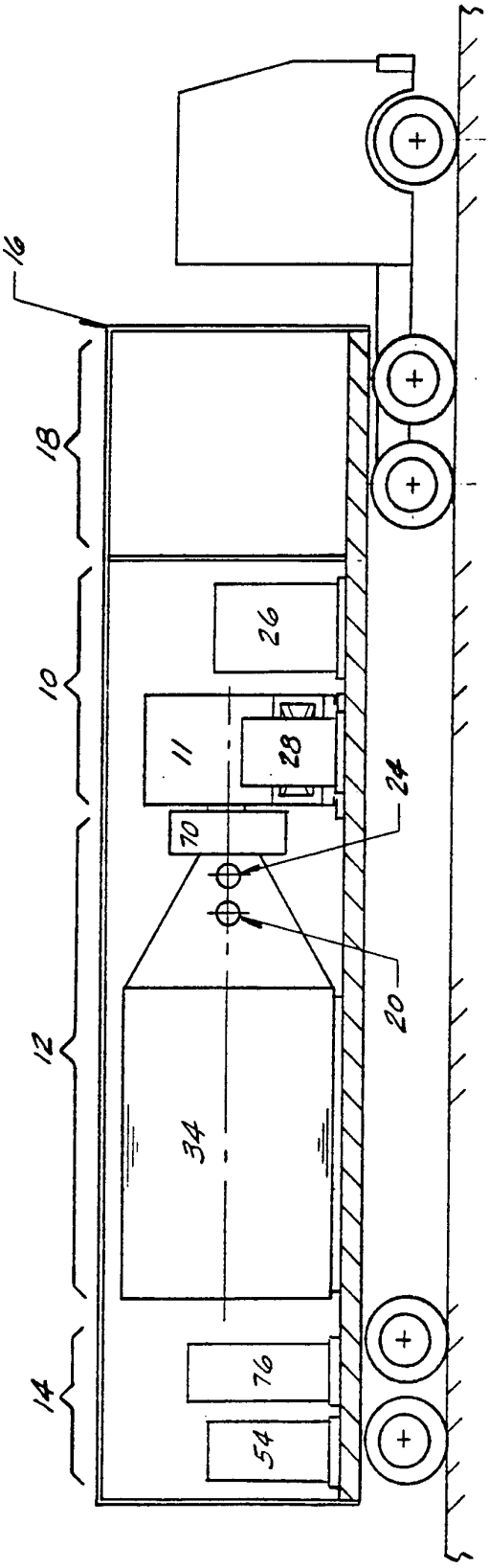
16
18
10
12
14
26
11
28
70
24
20
34
76
54

Fig. 2

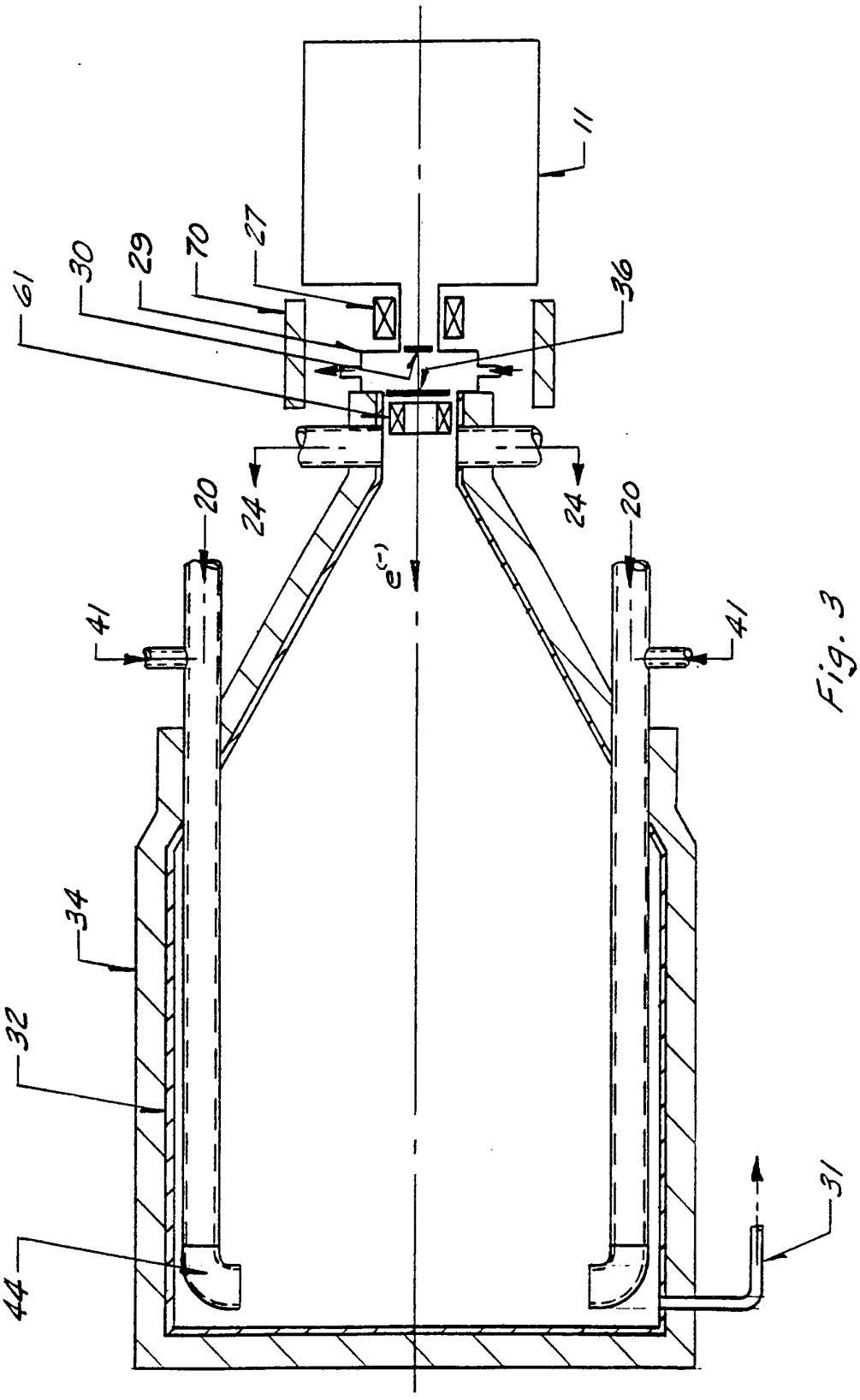

Fig. 3

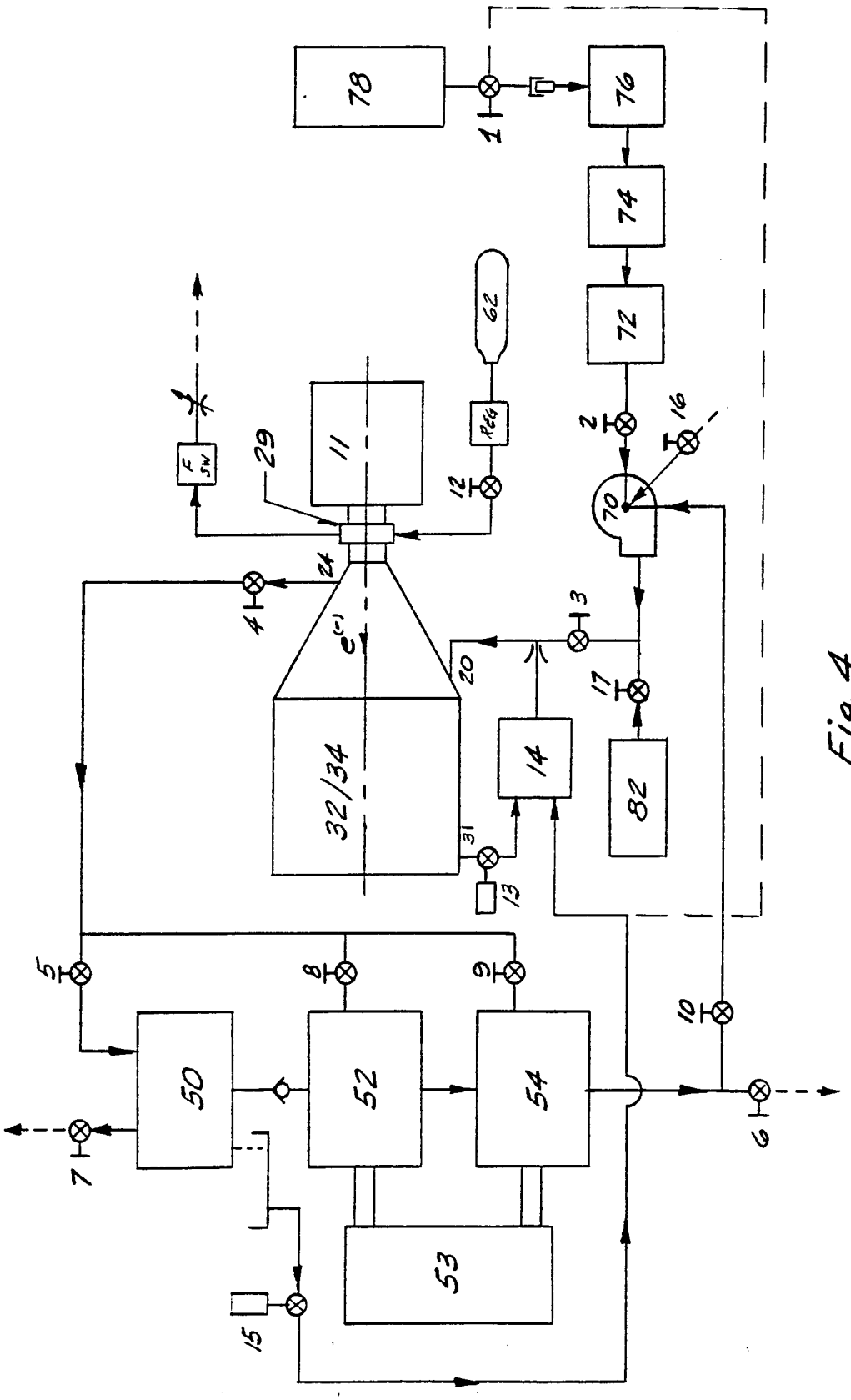
78
76
74
72
62
REG
11
29
F SW
70
82
14
32/34
50
52
54
53
1
2
3
4
5
6
7
8
9
10
12
13
15
16
17
20
24
31

Fig. 4

INTERNATIONAL SEARCH REPORT

International application No.
PCT/US93/12153

A. CLASSIFICATION OF SUBJECT MATTER

IPC(5) :B01J 19/08
US CL : 250/492.3, 435; 204/157.44, 157.3; 422/186
According to International Patent Classification (IPC) or to both national classification and IPC

B. FIELDS SEARCHED

Minimum documentation searched (classification system followed by classification symbols)

U.S. : 250/492.3, 435; 204/157.44, 157.3; 422/186

Documentation searched other than minimum documentation to the extent that such documents are included in the fields searched

Electronic data base consulted during the international search (name of data base and, where practicable, search terms used)

APS
search terms: electron accelerator, truck, vehicle, shield?, react?, waste

C. DOCUMENTS CONSIDERED TO BE RELEVANT

Category*	Citation of document, with indication, where appropriate, of the relevant passages	Relevant to claim No.
Y	US,A, 4,915,916 (ITO et al.) 10 April 1990, col. 1, line 34	1-19, 31-46, 48-54
Y	US,A, 4,752,450 (DIETRICH et al.) 21 June 1988, col. 3, lines 20-23 and 60-63	7,18,19,45
Y	WO,A,91,09665 (NAMBA et al.) 11 July 1991, abstract	25-29
Y	USA, 4,882,020 (MAEZAWA et al) 21 November 1989, col. 2, lines 40-49	36,37
A	US,A, 3,842,279 (SCHUMACHER) 15 October 1974	1-55

☐ Further documents are listed in the continuation of Box C. ☐ See patent family annex.

* Special categories of cited documents:

"A" document defining the general state of the art which is not considered to be part of particular relevance

"E" earlier document published on or after the international filing date

"L" document which may throw doubts on priority claim(s) or which is cited to establish the publication date of another citation or other special reason (as specified)

"O" document referring to an oral disclosure, use, exhibition or other means

"P" document published prior to the international filing date but later than the priority date claimed

"T" later document published after the international filing date or priority date and not in conflict with the application but cited to understand the principle or theory underlying the invention

"X" document of particular relevance; the claimed invention cannot be considered novel or cannot be considered to involve an inventive step when the document is taken alone

"Y" document of particular relevance; the claimed invention cannot be considered to involve an inventive step when the document is combined with one or more other such documents, such combination being obvious to a person skilled in the art

"&" document member of the same patent family

Date of the actual completion of the international search	Date of mailing of the international search report
02 February 1994	FEB 08 1994
Name and mailing address of the ISA/US Commissioner of Patents and Trademarks Box PCT Washington, D.C. 20231 Facsimile No. NOT APPLICABLE	Authorized officer For Jack Berman Telephone No. (703) 308-4849

Form PCT/ISA/210 (second sheet)(July 1992)★