J. McFELL.

SIGNAL TRANSMISSION MEANS.

APPLICATION FILED OCT. 21, 1912.

1,140,471.

Patented May 25, 1915.

3 SHEETS—SHEET 1.

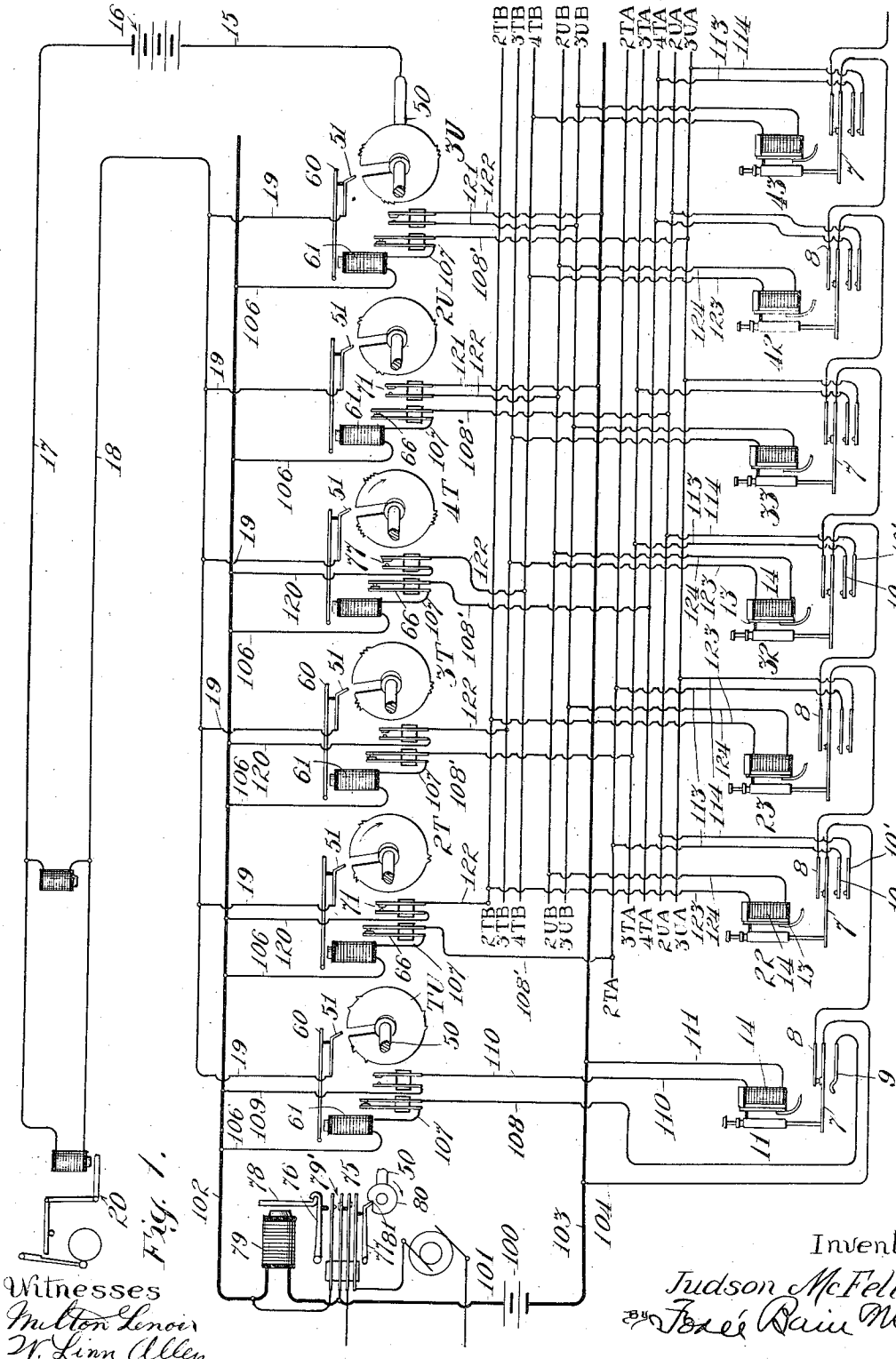

Fig. 1.

Witnesses
Milton Lenoir
W. Linn Allen

Inventor
Judson McFell.
By Fox & Baird May
Attorneys.

J. McFELL.

SIGNAL TRANSMISSION MEANS.

APPLICATION FILED OCT. 21, 1912.

1,140,471.

Patented May 25, 1915.

3 SHEETS—SHEET 2.

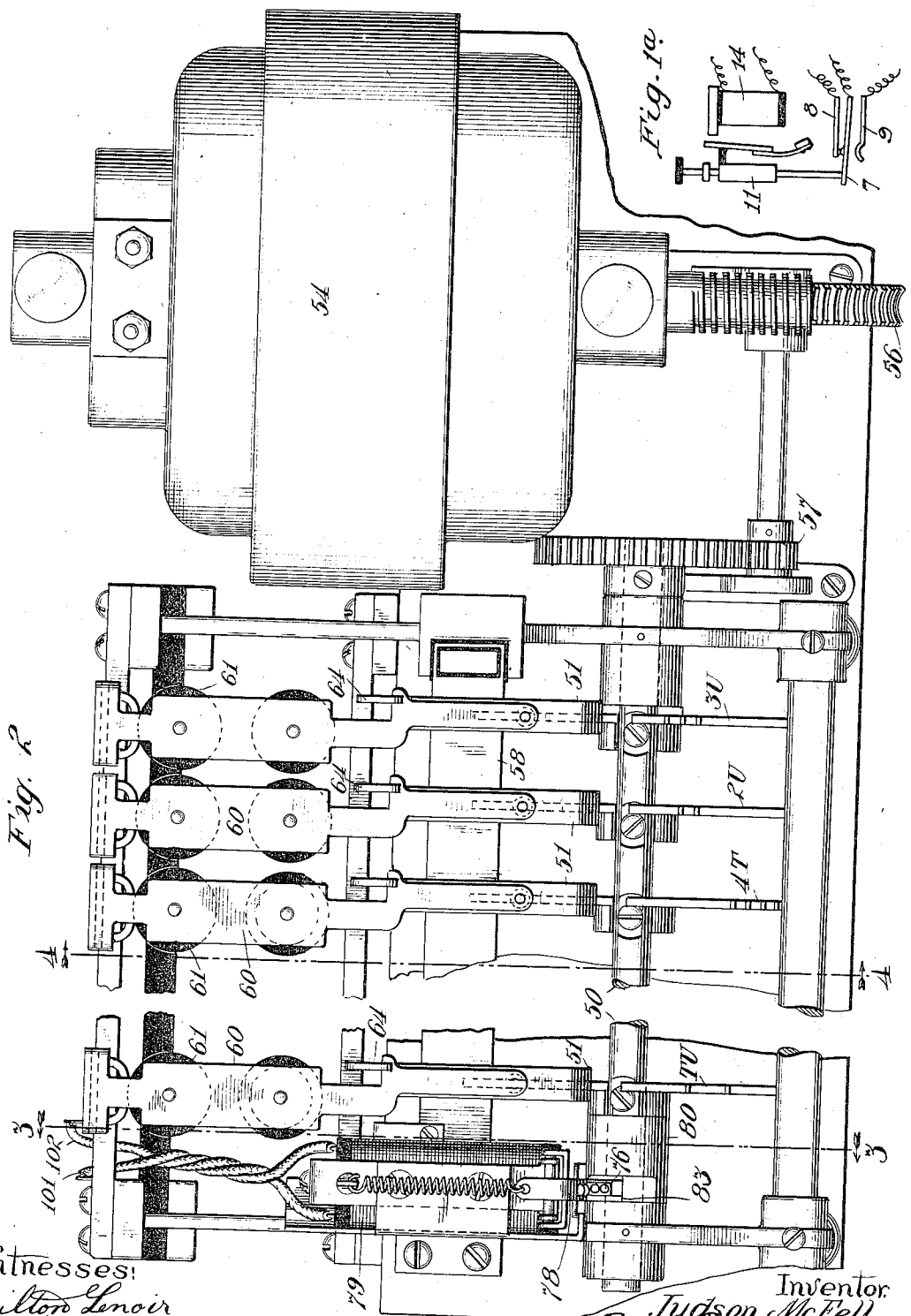

Witnesses:
Milton Lenoir
W Linn Allen

Inventor.
Judson McFell.
By Foxée Bain May
Attorneys.

J. McFELL.

SIGNAL TRANSMISSION MEANS.

APPLICATION FILED OCT. 21, 1912.

1,140,471.

Patented May 25, 1915.

3 SHEETS—SHEET 3.

Fig. 3.

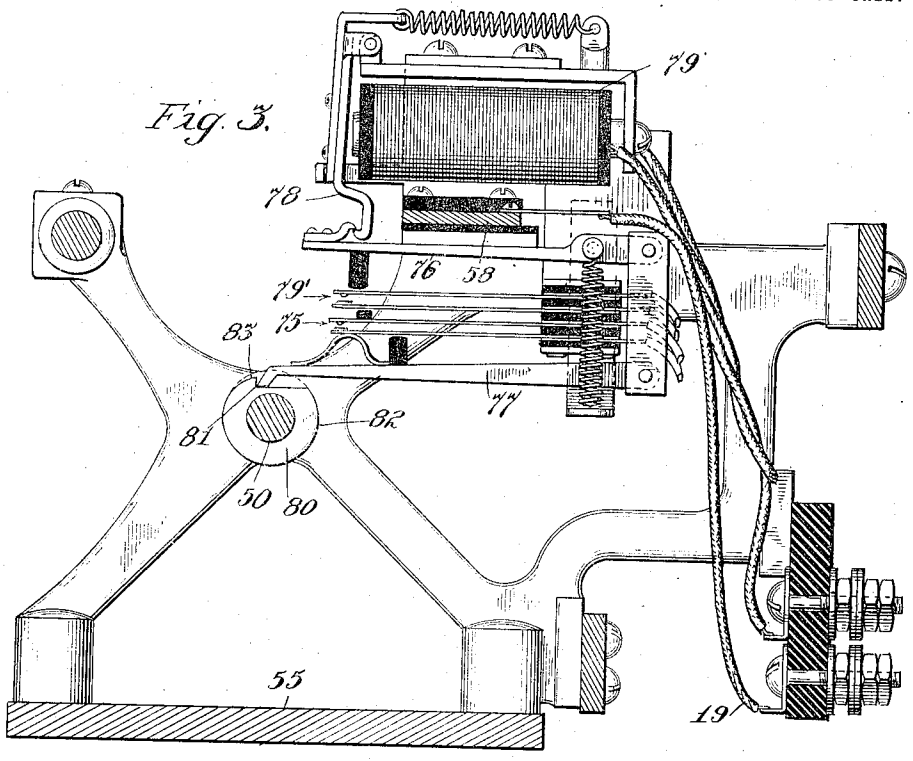

Fig. 4.

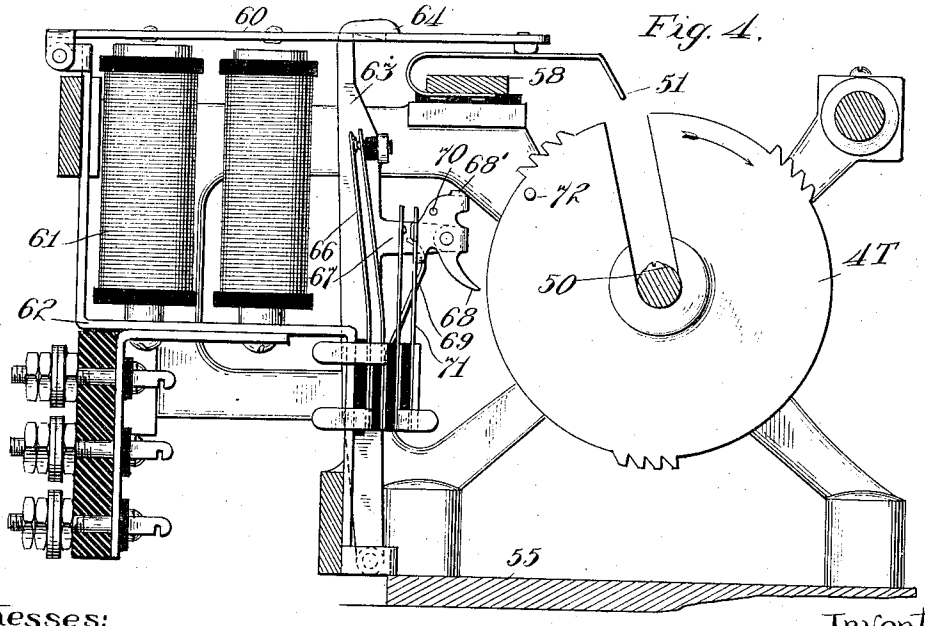

Witnesses:
Milton Senoir
W. Linn Allen

Inventor:
Judson McFell.
By Forée Bain May
Attorneys

UNITED STATES PATENT OFFICE.

JUDSON McFELL, OF CHICAGO, ILLINOIS

SIGNAL-TRANSMISSION MEANS.

1,140,471. Specification of Letters Patent. Patented May 25, 1915.

Application filed October 21, 1912. Serial No. 726,951.

To all whom it may concern:

Be it known that I, JUDSON McFELL, a citizen of the United States, residing at Chicago, in the county of Cook and State of Illinois, have invented certain new and useful Improvements in Signal-Transmission Means, of which the following is a specification.

My invention relates to signal transmission means and more particularly to means for initiation of plural digit number signals or code signals for the ringing of bells, flashing of lights, operation of selectors, or other selective manipulations of electro-responsive devices in a signaling circuit.

One of the objects of my invention is to provide a transmitter apparatus wherein the signal initiation is primarily effected from a selective key board controlling, electrically, the operations of motor-driven transmitting mechanism so that the selective key board may be placed in any desired position, as on an operator's desk, while the motor mechanism may be placed anywhere, either remote from or proximate to the keyboard.

A further object of my invention is to provide efficient means by which the operation of any designated key of the keyboard may so set the line signaling apparatus of the transmitter mechanism and so initiate its motor operation that the desired signal may be transmitted over the line.

Another object of my invention is to provide motor mechanism which, when conditioned for operation by the movement of a signal initiating key, may operate through a certain cycle to transmit a signal in a particular way, and then may automatically come to rest in condition to transmit any subsequent signal that may thereafter be initiated.

Still a further object of my invention is so to arrange the apparatus that when a plurality of the signal-initiating keys are depressed to condition the apparatus to send a plurality of different signals, the motor mechanism may respond thereto to transmit the said signals in predetermined succession one after another, and without conflict.

A still further object of my invention is to provide an apparatus in which the number of signaling wheels, *i. e.*, line-switch-controlling wheels, of the transmitter may be made materially less than the number of keys of the signal-initiating keyboard, certain keys of the board each controlling the operations of a plurality of signaling wheels which jointly operate to transmit the plural-digit signal for which the selected key is designated.

Other and further objects of my invention will become apparent to those skilled in the art from the following description when taken in conjunction with the following drawings, wherein—

Figure 1 is a diagrammatic view showing a convenient arrangement of the transmitter motor mechanism and key boards arranged for operating signal bells; Fig. 1ª is a detail of the key-locking and releasing means. Fig. 2 is a plan view of the motor mechanism; Fig. 3 is a transverse section taken on lines 3—3 of Fig. 2; and Fig. 4 is a transverse section taken on lines 4—4 of Fig. 2.

The signal transmitting apparatus comprises in general a transmitter structure and a key board or controlling structure, electrically interconnected but mechanically independent of each other, so that, by appropriately leading the wiring from one to the other, the key board structure,—which includes manually-operable selective keys,—may be located at any desired position, as upon an operator's desk, while the transmitter mechanism,—which is automatically operable in response to the control of the key boards may be located elsewhere. There are preferably as many keys on the key board as there are predetermined signals to be transmitted, each key being individual for the transmission of some definite number or code signal, and in the drawings each key is indicated by numeral corresponding with the signal to be transmitted in response to depression of that key. Thus the keys in the illustration made are numbered respectively 11, 22, 23, 32, 33, 42 and 43. The transmitter mechanism comprises an electric motor and a suitable plurality of number-wheels driven thereby, said number wheels being adapted for coöperation, under the control of the selective keys, with make and break switches in a line and so arranged either that a single wheel, by its individual operation, or a plurality of wheels, by their

joint operation, under the control of the appropriate key, may cause the transmission of the desired number signal in the line. The transmitter structure is so related to the key board that operation of any key conditions the appropriate signal wheel or wheels to transmit in the line the number signal appropriate to said key and starts the wheel-driving motor in operation, means being provided for the automatic stopping of said motor when the wheels have completed one signaling cycle, and means preferably being provided in connection with the key board whereby the operation of a plurality of keys will occasion automatic successive transmission of the several signals for which the key board is set. Specifically, this is done by the automatic locking of each key in depressed position until its signal has been transmitted and the automatic release of each signaling key upon the completion of transmission of its signal.

Each key 11, 22, etc., is provided with suitable circuit-controlling switches so that when depressed it closes the appropriate circuit to control the functional operation of the wheel or wheels to be actuated in response thereto, closes the motor-controlling circuit, and, preferably, opens the battery connections for all key-switches subsequent in order to said operated switch. Thus each key is shown cooperating with the long switch spring 7 which coacts with an upper switch contact 8 and suitable lower switch springs, which may be either a single spring shown at 9 (in connection with key 11) or a plurality of springs shown at 10 and 10′ according to whether the key is to control only a single wheel or a plurality of wheels. Each key when depressed is latched by a spring pressed armature 13 which may be retracted to unlatching position by a release magnet 14 when the latter is energized.

A key board such as may be employed on a chief operator's or supervisor's desk may consist simply of a set of keys and a proper complement of switches and releasing magnets, all of the rest of the apparatus being removed to such location as occasion may require.

The automatic transmitter device preferably comprises a series of line-switch-operating number-wheels, mounted on a common shaft 50 which is connected as by wire 15 to a battery 16 from which leads one line wire 17, the return wire 18 having multiple connections 19 with the contact brushes 51 one of which may be provided for each wheel. Between the wires 17 and 18 are bridged the electro-responsive devices, here shown as single-stroke gongs, 20, of appropriate construction.

Each wheel may be individually constructed to send a complete signal or the wheels may be constructed so that each represents simply a digit of a certain order, so that the conjunctive action of a plurality of wheels is necessary for the transmission of a signal comprising a plurality of digits. Thus in the specific construction shown one wheel TU is shown as having both tens and units teeth, to transmit individually the number signal "11," and it is arranged to be operated individually as a result of the depression of the key 11. The remaining wheels 2T, 3T, 4T 2U and 3U are adapted for the transmission respectively of the number 2, 3, and 4 of the tens order and 2 and 3 of the units order so that wheels 2T and 2U must operate conjunctively in response to operation of switch 22 to transmit the number signal "22," and so on. It will be obvious that when the numbers to be transmitted run up to relatively high numbers, say from 11 up to 99, a very much smaller number of wheels will be necessary in this arrangement than if an individual wheel were provided for each key to transmit an individual number. Where a plurality of conjunctively working wheels are to be employed for the transmission of a single signal it is my preference that the teeth of the wheels be so cut that the last tooth on the tens order occurs in the same relative position upon each wheel regardless of the total number of teeth of that order and also that the first tooth of the units order shall occur at a predetermined point on the wheel suitably remote from the point where the teeth of the tens order stop on the tens wheels, so that the spacing between the last tooth of any tens wheel and the first tooth of any units wheel, which may be selected for conjunctive operation will be uniform. In Fig. 1, I have shown each wheel as bearing its group of teeth several times repeated, and this form of wheel I preferably employ where I intend to use the apparatus in the transmission of number signals for call bells or the like; but the tooth arrangement may be varied to suit special circumstances. For instance, to operate selectors of the general type shown in my Patent No. 574,157, the wheels would have teeth on which the salient number would occur but once, and the terminal portion of the periphery would be provided with teeth in uninterrupted sequence.

It will be manifest that the particular construction described provides—in one advantageous way, obviously subject to variation in detail—a series of number wheels and line-switch means therefor normally disabled but adapted for actuation to connect any selected number wheel or wheels in signal transmitting relation to the line circuit.

The transmitter is motor-driven, as by an electric motor 54 mounted on the base plate 55 of said frame, the driving connections to wheel shaft 50 being established in this instance through a worm gear 56 and a further

reduction gear 57. All of the contact brushes 51 are spring members mounted upon a cross-bar 58 insulated from the remainder of the frame for common connection to the line wire 19, as heretofore described.

The appliances associated with the various number wheels are alike in construction, the complete arrangement of one wheel being shown in Fig. 4. The brush 51 acts as a retracting spring for the armature 60 of a line-switch-controlling electro-magnet 61 mounted upon suitable braces 62 of the frame, so that when the armature is attracted the brush is depressed into position for coöperation of the teeth of its wheel. The magnet 61 thus constitutes the direct-means for bringing the line switch and number wheel into operative association. A latch lever 63 is provided for the armature 60, said latch being arranged in vertical position or at right angle to the armature and provided with a forwardly projecting shouldered head 64, which, when the armature is depressed, may swing forward over a contiguous portion of the armature lever to latch in its depressed position, thus to insure maintenance of the operative relation of the line switch and number wheel until the latch is positively released. The latch lever, when in armature unlatching position, closes a switch 66 the front leaf of which acts as a spring for the latch, so that the switch opens when the latch is forced forward to latching position. This switch 66, as shown in the circuit diagram, is connected in circuit with the line-switch magnet 61 so as to open the magnet circuit as soon as the magnet has done its work. The lever 63 is provided with a forwardly projecting arm 67, upon the extremity of which is pivoted a pawl 68, arranged, when rocked, to act against a spring 69. The pawl has a limited movement only in one direction, to bring a finger 68′ into engagement with the arm 67, and is provided with a pin 70 arranged, in the course of such limited movement, to close a spring switch 71, which is conveniently mounted in front of the switch 66. Upon the corresponding number wheel I provide a pin 72 arranged to coact with the tail of the pawl 68 when the lever 63 is in forwardmost, or locking position, and to pass out of engagement with said pawl substantially at the time that the pin 72 reaches its normal position, said pin completing the provision of means to disable the line switch again after a signaling cycle.

In the operation of the device, as will be hereafter explained, the shaft makes one complete revolution each time it is set in operation. Now, referring to Fig. 4, it will be apparent that if the armature 60 is depressed and shaft 50 is given a complete revolution, the operation will be as follows: Depression of the armature forces brush 51 into the path of the wheel teeth to condition the line switch for signaling; the tension of spring 66 forces forward the latch lever 63 until its head latches the armature in depressed position to maintain the operative relation of the line switch to the wheel, the switch 66 opening as it throws forward the latch lever so to open the magnet circuit; the tail of pawl 68 is thus thrown into the path of pin 72 and near the end of the rotation of the wheel pin 72 engages the pawl-tail and rocks pawl 68 so that pin 70 closes switch 71, after which, (the pawl having reached the limit of its pivotal movement) the latch lever is forced bodily rearward so that it releases the armature 60, whereupon brush 51 forces up the armature 60 to normal position and all of the parts are restored to normal arrangement substantially at the time that the wheel completes its cycle.

In order to insure that the shaft of the transmitter will start in its motor driven operation before any low resistance magnet 61 is fully energized, and will continue in operation until the signal-wheel shaft has made a complete revolution, I provide in the motor circuit a switch 75, normally open and adapted to be closed by either of two opposed levers 76 and 77, which I may term respectively the starting and stopping levers. Lever 76 is normally held in inoperative position by latch 78, which constitutes the armature of a motor-starting high resistance magnet 79, arranged as hereafter described, in a circuit common to all of the line-switch-controlling magnets 61, said magnet having connected with opposite terminals thereof a normally open switch 79′ also controlled by the starting lever 76. The stopping lever 77 is controlled by a cam 80 mounted on a shaft 50. The cam 80 has a notch 81 with a radial front wall, a concentric surface 82, and a slight depression from the true circle, as indicated at 83, adjacent the radial front wall of the notch 81. The arrangement of these switch-controlling parts for motor-switch 75 is such that when the armature 78 of starting-magnet 79 unlatches the starting lever 76 the falling of said lever closes the switches 75 and 79′, and as the cam 80 raises the stopping lever 77 a suitable projection on said lever presses upwardly against the switches 79 and 79′ to hold them closed and to raise the springs thereof upward. When the end of lever 77 is traveling on the concentric portion 82 of the cam 80, the springs of switches 79 and 79′ are raised so high that the starting lever 76 is lifted to an appropriate elevation to be latched by the armature 78, but as the portion 83 of the cam 80 passes under the end of the lever 77, the lever 76 (unless it be latched by the armature 78) may descend below the level at

which it may be latched by the armature 78. Obviously, if the starting magnet receives a single impulse the switches 75 and 79′, will be closed and will remain closed until the shaft makes a complete revolution, cam 80 lifting the starting lever to re-latched position and finally dropping the "stopping" lever 77 to initial position in notch 81, to open motor switch 75. Also it will be clear, if the magnet gets a second impulse while cam portion 83 is passing lever 77, the armature will unlatch lever 76, so that switches 75 and 79′ will not open when lever 77 drops in notch 81 of the cam, and so as often as this condition occurs the motor will continue in operation and the wheels will be revolved through successive cycles. The purposes of switch 79′ is to cut out magnet 79 when the latter is not needed for operation, so giving magnet 61 more current to insure them effective and timely operation.

The circuits connecting the key boards with the transmitter magnets and switches will vary in particular relation, but they provide in general a starting circuit for control by each key extending from battery through the switch or switches closed by depression of the key and thence through the line-switch magnet or magnets 61 of the signal wheel or wheels which are to respond to the depression of that key, and, in series with said magnets, through the motor controlling magnet 79. Also there is provided for the release magnet 14 of each key a circuit controlled by the switch 71 of the single wheel or plurality of wheels the functional operation whereof is initiated by depression of the key. In the specific construction shown 100 indicates the battery from which are run a positive lead 101—102 and two negative leads 103 and 104, the latter running in series through all of the switches 7 and 8 of the respective signal initiating keys, connecting first to the long blade 7 of the first key, 11, and from its upper contact 8 to the long blade of the next switch and so on. The battery wires 101—102 include between them the motor controlling magnet 79 and wire 102 has multiple connection 106 to all of the magnets 61 which control the respective line switches of the signal wheel, each said magnet having a connection 107 with one of the springs of its normally closed switch 66. Where a single signal wheel is controlled by each key the connections are very simple, as shown in the connections of switch 11. Lower contact 9 is connected by wire 108 with the remaining spring of switch 66 for key 11, so that upon closure of key-controlled switch 7—8 a starting circuit is established as follows: 100, 101, magnet 79, 102, 106, magnet 61, 107, switch 66, 108, switch 9—7, 104, 103, 100. The release circuit for key-magnet 14 in such arrangement is established by wire 109 from positive battery wire 102 to one spring of normally opened switch 71 and from the other spring by wire 110 to the release magnet 14 the remaining terminal of which is connected by wire 111 to the negative battery wire 103.

Where, as shown in the other keys, each key controls the line-switch magnets 61 of a plurality of signal wheels and (as one convenient means of effectuating the proper release) the release magnet for the corresponding key is to be controlled jointly by the release switches appurtenant to said two wheels, the wiring may conveniently be carried out on the following plan: The wire 108′ for each switch 66 may be connected with a common tie wire (each indicated by the same numeral as the wheel, followed by the letter A, as "2TA", "3TA", etc.) and the lower springs 10 and 10′ of the respective keys may be connected with the appropriate tie wires, which are lettered in accordance with the two wheels to be controlled, by wires 113 and 114, respectively. Thus the wires 113 and 114 for key 22 connect springs 10 and 10′ respectively to common tie wires 2TA and 2UA, so that, obviously, when spring 7 is depressed by the key, circuits are closed for the controlling magnets of both wheels 2T and 2U, from the negative battery wire 104 to positive battery wire 102 by respective paths 7—8 of key 11, 7—10 of key 22, 113, 2TA, 108′, switch 66, 107, magnet 61 for wheel 22, 106; and 7—10′ of key 22, 114, 2UA, 108′, switch 66, 107, and magnet 61, for wheel 2U, 106.

All of the release-controlling switches for the tens wheels may have one wire 120 connected to positive battery wire 102, while one spring for each said switch for each unit wheel is connected by wire 121 to negative battery wire 103. The remaining spring for each release switch appurtenant to a number wheel is connected to its respective common tie wire, indicated by the numeral of the wheel with the added letter B, as 2TB, 3TB, etc., as by wire 122. Each key release magnet 14, then, is connected by wires 123 and 124 between those common tie wires appurtenant to the respective wheels the operation whereof said key initiates, key 22 for instance having its release magnet 14 connected by wires 123 and 124 respectively with common tie wires 2TB and 2UB. Thus the energization of release magnet 14 for key 22 will occur only when the release-controlling switches 71 of both wheels 2T and 2U are closed, the circuits in that event being established as follows: 100, 103, 121, 71, 122 (the last three appurtenant to wheel 2U), 2UB, 124, 14, 123, (the last three appurtenant to key 22), 2TB, 122, 71 of wheel 2T, 120, 102, and thence to battery.

In general the operation of the device will

be as follows: Assuming that number key 11 is depressed, said key is immediately latched into pressed condition, thereby to open at 7—8 the negative battery connection for the main spring of all succeeding keys and at the same time closing at 7—9 a starting circuit which includes the line-switch-controlling magnet for wheel TU and also the motor-controlling magnet, said circuit comprising 100, 103, 104, 7, 9, 108, 66, 107, 61, 106, 102, 79, 101, 100. The motor-controlling magnet when energized attracts its armature, dropping the starting lever 76 to close both of the switches 75 and 79′ thereby cutting the starting magnet out of circuit (short circuit through 79′) and closing the motor circuit at 75. The increased flow of current due to the short circuiting of the motor-controlling magnet results in instant energization of the line-switch-controlling magnet 61 in said circuit which attracts its armature, depressing the contact brush 51 into position for coöperation with the teeth of the wheel TU and also releasing the latch lever 64 which is impelled forward by the resiliency of spring 66 so that armature is mechanically held depressed though the circuit through magnet 61 is immediately opened by the separation of switch springs 66. This condition of the parts of the key board and transmitter will continue until shaft 50 has made its complete revolution. Consequently the signal wheel TU transmits its signal over the line (16, 15, 50, TU, 51, 19, 18, 20, 17, 16), the signal being number 11 three times repeated to ring the gongs correspondingly. In the last few degrees of the revolution of the number-wheel shaft 50 the pin 72 on the number wheel strikes the pawl 68 (which has been thrown forward with the latch lever 63) and rocks said pawl to close the spring switch 71 and thereafter to force the latch lever 63 back to unlatched position, closing switch 66 and allowing spring brush 51 to raise the armature to normal position before pin 72 escapes from the pawl 68 and permits said pawl to return to its normal position under the influence of spring 69. The momentary closure of switch 71 as described closes the key-releasing circuit for release magnet 14 of the key 11 so that said magnet attracts the latching armature 13 and releases the key for restoration to raised position. During the rotation of the shaft 50 cam 80 has raised lever 77 and, through the switch springs 75 and 79′, elevated the starting lever 76 to position where it is latched to the armature 78 of the motor-controlling magnet 79. The starting lever is maintained in this latched condition by coaction of the concentric portion 82 of the cam with lever 27, but when (lever 76 being now latched) the lever drops from cam part 83 into the deep notch 81 of the cam the motor-controlling switch 75 and the short-circuiting switch 79′ open, thereby causing the motor to stop just as the complete revolution of the shaft is effected, and leaving the parts in their original positions.

If several keys are depressed successively on the key board, the stations will be called in succession without cessation of the motor operation, beginning with that station the key of which has its spring first in the series from battery 100. This will be readily apparent for obviously if keys 11 and 22 are to be depressed key 22 is disabled till key 11 has completed its restoration and closed its contacts 7—8 to complete the starting circuit for key 22. Though the restoration of key 11 may occur slightly in advance of the completion of the revolution of wheel shaft 50 the motor runs the transmitter through its second cycle, for, as cam portion 83 coacts with the stopping lever 77, (the starting lever having been latched during coaction of concentric portion 82 with the stopping lever) the magnet-short-circuiting switch 79′ opens. If key 22 has also been depressed (with contacts 7—8 for key 11 now closed) circuits run in parallel through magnets 61 for wheels 2T and 2U and then through magnet 79, so tripping starting lever 76 and cutting out magnet 79, which causes operation of magnets 61 for said wheels 2T and 2U to send their plural digit signal.

The connection of the circuits with the common tie wires is such that a key-releasing magnet will respond only to the closure of switches 71 for both the tens and units wheels involved in sending the signal for the released key. Thus since wheels 2T and 2U may jointly operate to send the number 22, the release magnet for wheel 22 is in series with the release-controlling switches 71 of both number wheels, so that the operation of said number-wheel switches serves to energize the release magnets of the one key 22, only.

It will be obvious that the apparatus as described is adaptable for many purposes where it is desired to actuate electro-responsive devices, such as call bells, fire alarm apparatus, telephone selective devices, and like forms of transmitters serving to transmit predetermined number signals over the line.

While I have herein described in some detail the specific embodiment of my invention, it will be apparent to those skilled in the art that numerous changes may be made without departure from the scope of the appended claims.

What I claim is:

1. Signal transmitting mechanism comprising a plurality of number wheels and complementary line-switch means, a magnet for each wheel and switch means controlling the operative association of its respective wheel with the line, and key means respectively controlling the appropriate magnets

for the number wheels and also controlling one another in predetermined succession.

2. In a device of the character described, the combination with a plurality of number wheels, means to rotate them, signal switches associated therewith, and means to control the operative association of the signal wheels with a signaling line, of a plurality of signal-initiating devices controlling the control means for appropriate signal wheels, and means governed by each signal-initiating device for disabling said control means of all subsequent signal-initiating devices.

3. In a device of the character described, the combination with a plurality of signal wheels, driving means therefor, complemental line-switch mechanism, and controlling means for connecting the respective wheels in operative relation with the line, of a plurality of signal-initiating devices each operatively associated with the controlling devices of appropriate wheels to transmit a predetermined signal in the line, said initiating devices being manually movable to set or operative position, means automatically to hold said devices in set position each until the completion of the signal operation which it initiates, means to prevent the initiation of any signal until the release of all prior signal-initiating means, and means for releasing each said signal-initiating device upon completion of its signal.

4. In a device of the character described, the combination with a plurality of signal wheels, driving means therefor, complemental line switch mechanism, and electro-responsive controlling means for connecting the respective wheels in operative relation with the line, of a plurality of signal initiating devices manually movable to set or operative position and each controlling certain of the electro-responsive controlling means, means automatically to hold each said signal initiating device in set position, and means automatically to release and restore the signal initiating device to normal condition upon completion of its signal.

5. In a device of the character described, the combination with a plurality of signal wheels, driving means therefor, complemental line switch mechanism, and controlling means for connecting the respective wheels in operative relation with the line, of a plurality of signal initiating devices manually movable to set or operative position, latch means automatically to hold each said signal initiating device in set position, a latch-releasing electro-magnet associated with each latch, a circuit therefor and switch means timed in operation by the rotation of the wheels for controlling the operations of said electro-magnet.

6. In an apparatus of the character described, a plurality of number wheels and complemental line-switch mechanism, a part movable to active position to condition each signal wheel and line-switch mechanism for transmission of a signal in the line, an electromagnet controlling the initial movement of said part, mechanical latch means for maintaining said parts in said active position, and means controlled by the rotation of the wheel for releasing said latch means.

7. In an apparatus of the character described, a line circuit, a number wheel and complemental line switch mechanism, a part movable to active position to condition said signal wheel and line switch mechanism for transmission of a signal in the line circuit, an electro-magnet for controlling the initial movement of said part, a circuit for said magnet, means automatically to break said circuit, mechanical latch means to maintain said part in active position after rupture of the magnet circuit, and means timed by the wheel rotation automatically to release said latch means.

8. In an apparatus of the character described, a plurality of number wheels and complemental line-switch mechanism, a part movable to condition each signal wheel and line-switch mechanism for transmission of a signal in the line, an electromagnet controlling the initial movement of said part, mechanical latch means for maintaining said parts in said position, a cut-out switch for the electromagnet controlled by the latch means, and means controlled by the rotation of the wheel for releasing said latch means.

9. In an apparatus of the character described, a plurality of wheels, a complemental contact brush for each wheel normally disconnected from the wheel, an electromagnet arranged to move said brush into position for coöperation with the wheel, latch means automatically operable to maintain the brush in said position, and means for releasing said latch controlled by the rotation of the wheel.

10. In an apparatus of the character described, a signal wheel, a complemental contact brush normally disconnected from its wheel, an electromagnet for moving said brush into active position for coöperation with the wheel, latch means automatically operable to maintain said brush in active position, and means for releasing said latch controlled by the rotation of the wheel.

11. In an apparatus of the character described, a signal wheel, a complemental contact brush normally disconnected from said wheel, an electromagnet for moving said brush into active position for coöperation with the wheel, a circuit for said magnet, a normally open initiating switch in said circuit, a normally closed switch in said circuit, means controlled by said magnet for opening the last said switch, latch means automatically operable to maintain said

brush in active position, and means for releasing said latch controlled by rotation of the wheel.

12. In a device of the character described, the combination of a number wheel, a line switch mechanism therefor, a part movable to condition said wheel and switch mechanism to transmit signals in a line, a magnet for initially moving said part to active position, a latch for holding said part in active position, and releasing means for said latch comprising a pawl, carried by the latch for movement toward and from the wheel, and a pawl-actuating part on the wheel.

13. In a device of the character described, the combination of a number wheel, a normally retracted contact brush, means to move the brush into active position for cooperation with the wheel, a pivoted latch for releasing said brush in active position, movable toward the wheel in effecting its latching operation, a pawl pivoted on the latch, and a part on the wheel moving in a path to engage said pawl when it is in forwardmost position, thereby to force the pawl rearwardly and release the latch during the rotation of the wheel.

14. In a device of the character described, a plurality of number wheels, a shaft therefor, an operating motor for said shaft, a motor-controlling switch, a magnet controlling said motor-controlling switch, line-signaling means for each wheel, a magnet for each said line signaling means controlling its operative connections with the line to transmit signals therein, key-controlled circuit connections for the wheel-controlling magnets and the motor-switch-controlling magnet, and means controlled by the rotation of the wheel-shaft for opening the motor-circuit switch.

15. In a device of the character described, the combination of a number wheel, its shaft, a driving motor therefor, motor-circuit-closing means including a movable part to be latched in circuit opening position when inactive, a latch therefor, means on the shaft for moving said part to latched position and a magnet controlling said latch.

16. In a device of the character described, the combination of a number wheel, its shaft, a driving motor therefor, motor-circuit-closing means including a movable part to be latched in circuit opening position when inactive, a latch therefor, means on the shaft for moving said part to latched position, a magnet controlling said latch and a manual signal initiating switch controlling said magnet.

17. In a device of the character described, the combination of a plurality of number wheels, a shaft therefor, a shaft-driving motor, a circuit-controlling switch for said motor, a line providing switch means for operation by each number wheel, an electromagnet for each number wheel controlling its operative association with the line, an electromagnet controlling the closure of the motor switch, circuit connections for said motor-switch-controlling magnet and the controlling magnet associated with the respective wheel including signal-initiating switches, keys for operating said switches, latching means for said keys, and means for releasing said keys and opening the motor switch controlled by the rotation of said numeral wheel shaft.

18. In a device of the character described, a plurality of number wheels bearing teeth representative of digits of different orders, normally disabled line connections for said number wheels, and an initiating key arranged to control the line connections of a plurality of wheels of different orders, causing them jointly to be conditioned to send a plural-digit number signal in the line.

19. In a device of the character described, a plurality of signal wheels and switches each wheel and its switch adapted to send a certain digit of a plural-digit number signal, a plurality of keys each identified with a certain plural-digit signal, and means for operation of the appropriate signal wheels by each said key comprising an electromagnet for each wheel, a switch for each key and circuit connections including respectively each said switch with those electromagnets whose wheels are adapted to send the digits forming the signal for that key.

20. In a device of the character described, the combination of a shaft for cyclic operation, a plurality of signal wheels thereon, switches for said wheels, each switch and wheel adapted to transmit a certain digit of a plural-digit number signal, a plurality of keys respectively identified with different plural digit number signals, means controlled by each said key for conditioning for transmitting operation the appropriate signal wheels which cumulatively present the number identified with the key, and means automatically to maintain the conditions inaugurated by the key operation throughout a cycle of operation of the shaft.

21. In a device of the character described, a plurality of signal wheels and switches, each wheel and its switch adapted to send a certain digit of a plural-digit number signal, a plurality of keys each identified with a certain plural-digit signal, means for latching each key when depressed, means for operation of the appropriate signal wheel by each said key comprising an electromagnet for each wheel, a switch for each key, and circuit connections including respectively each said switch with those electromagnets whose wheels are adapted to send the digits forming the signal for that key, and releasing means for each key controlled jointly by those wheels which are

adapted to send the digits forming the signal for that key.

22. In a device of the character described, a plurality of signal wheels and switches, each wheel and its switch adapted to send a certain digit of a plural-digit number signal, a plurality of keys each identified with a certain plural-digit signal, means for latching each key when depressed, operating means for each wheel and its switches controlled by those keys whose signals include the digit adapted to be sent by that wheel and its switch, and means to release each key including an electromagnet for each key, a switch for each wheel, and circuit connections including respectively each said electromagnet with those switches whose wheels are adapted to send the digits appropriate to the key released by that electromagnet.

23. In a device of the character described, a plurality of signal wheels, means to rotate said wheels, means associated with each wheel for sending a signal including an electromagnet for each wheel, means for starting said wheel-rotating means including a high resistance electromagnet, signal-initiating means including a switch for each of a plurality of number signals; circuit connections including each said switch, the electromagnet for the appropriate signal wheels, and said electromagnet of the starting means; and automatic short-circuiting means for the electromagnet of the starting means.

24. In a device of the character described, a plurality of signal wheels, means to rotate said wheels, means associated with each wheel for sending a signal, means to start the wheel-rotating means, signal-initiating means, operative connections between each signal initiating means, the appropriate signal wheels, and said starting means, said starting means including an electromagnet, switches controlled thereby, and circuit connections controlled by said switches, one said circuit connection short-circuiting said electromagnet.

25. In a device of the character described, a plurality of signal wheels, means to rotate said wheels, means associated with each wheel for sending a signal, means to start the wheel-rotating means, signal-initiating means, operative connections between each signal initiating means, the appropriate signal wheels, and said starting means, said starting means including an electromagnet, switches controlled thereby, and circuit connections controlled by said switches, one said circuit connection short-circuiting said electromagnet, and means controlled by the rotation of said wheels for opening said switches.

In testimony whereof I hereunto set my hand in the presence of two witnesses.

JUDSON McFELL.

In the presence of—

W. LINN ALLEN,

MARY F. ALLEN.