(12) UK Patent Application (19) GB (11) 2 207 902 (13) A

(43) Application published 15 Feb 1989

(21) Application No 8714304

(22) Date of filing 18 Jun 1987

(71) Applicant
Craig Medical Products Limited

(Incorporated in United Kingdom)

204a London Road, East Grinstead, Sussex, RH19 1EY

(72) Inventor
P L Steer

(74) Agent and/or Address for Service
D. Young & Co
10 Staple Inn, London, WC1V 7RD

(51) INT CL⁴
B65D 30/02 F16L 11/12

(52) Domestic classification (Edition J):
B8K 2KX 2M WC
F2P 1A36 P3
U1S 1299 B8K F2P

(56) Documents cited
GB 1302940 GB 0436730 GB 0395239

(58) Field of search
B8K
F2P
Selected US specifications from IPC sub-class
B65D

(54) Tubes for transmitting liquids and bags for containing liquids

(57) In a tube or bag, a wall thereof has scattered inwardly-projecting members 20, to prevent undesired obstruction of the tube or bag when it is kinked.

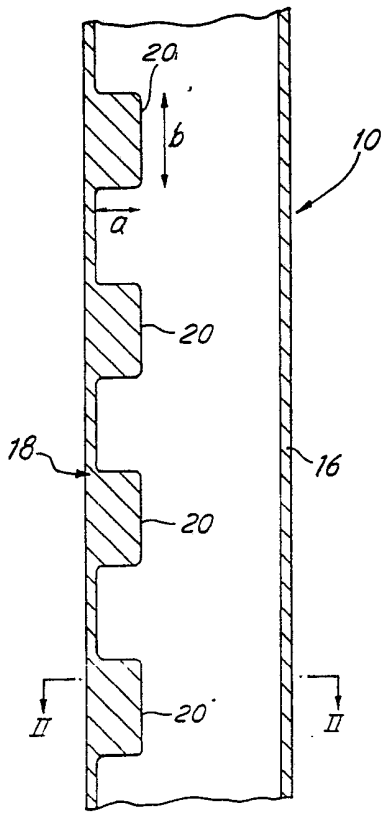

FIG.1

The drawing(s) originally filed was (were) informal and the print here reproduced is taken from a later filed formal copy

The claims were filed later than the filing date within the period prescribed by Rule 25(1) of the Patents Rules 1982.

GB 2 207 902 A

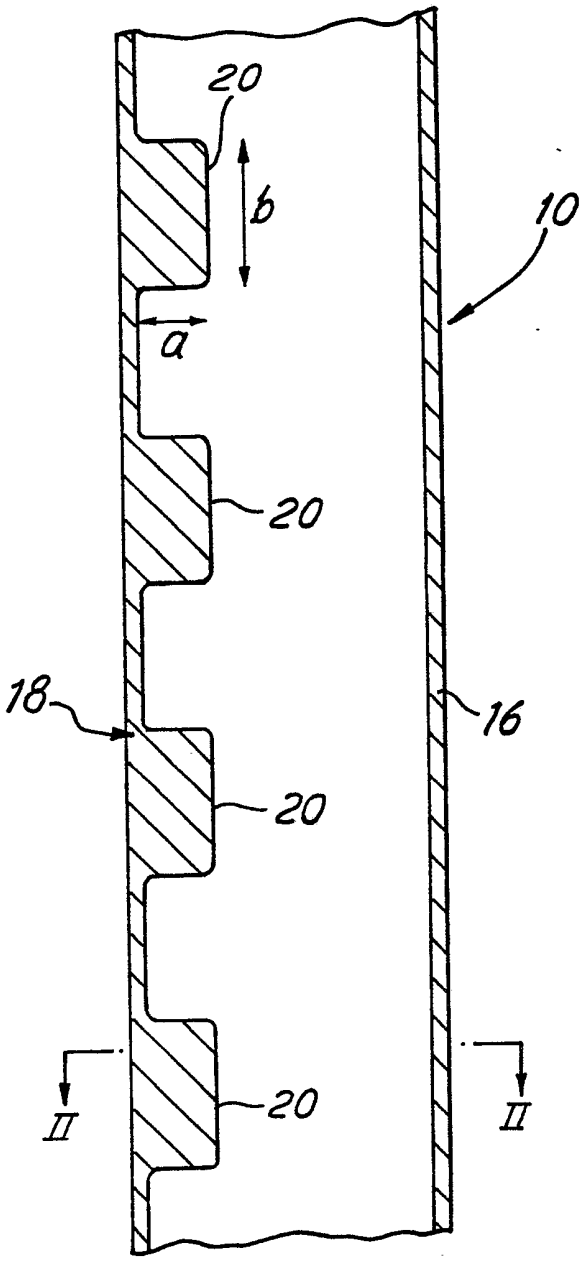

FIG.1

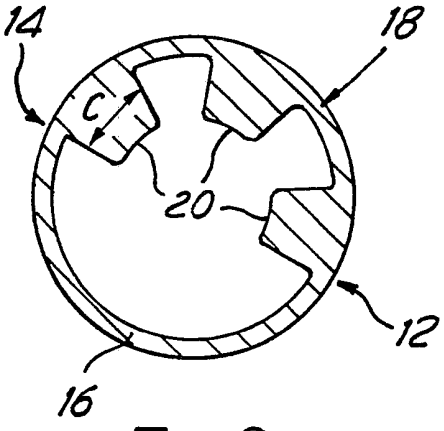

FIG.2

2207902

TUBES FOR TRANSMITTING LIQUIDS AND BAGS FOR CONTAINING LIQUIDS

This invention relates to tubes for transmitting liquids and bags for containing liquids.

In the medical field, particularly urine drainage, problems arise when tubes become kinked or bags become folded. This can occur due to movement of a wearer of a urine drainage bag, for example when the wearer is asleep. To the best of Applicant's knowledge and belief there is no truly effective way of preventing liquid obstruction due to kinking with currently available tubes and bags.

According to the present invention, there is provided a tube or bag in which a wall, or a substantial part of a wall, of a tube or a bag has scattered inwardly projecting members.

The invention will be better understood from the following non-limiting description of one example of the invention shown in the accompanying sketches in which:-

Figure 1 is a vertical axial diagrammatic cross section through a tube embodying one version of the invention; and

Figure 2 is a transverse diagrammatic cross section through the tube shown in Figure 1.

The illustrated tube 10 is made up of two plastics walls 16 and 18 axially secured together at longitudinally extending zones 12 and 14. The wall 16 is of a plain plastics strip. The wall 18 has, according to the invention, scattered inwardly projecting projections 20. These may be regularly distributed over the inner surface of the wall 18. The projections 20 may be formed by bubbles of the material containing entrapped air or gas.

If desired the whole tube may be made of material of the kind illustrated at 18.

The invention is based upon the concept that the presence of the projections 20, when the tube is kinked, prevents the complete closure of the pathway through the tube. The 20 projections in a kinked or twisted tube in effect define a labyrinthine path through which liquid can percolate irrespective of the extent of kinking of the tube. A similar desirable effect is found in the case of a folded urine bag.

The size of the projections in part depends on the tube diameter but they should not be too large or too small. Suitable projections may have the following approximate dimensions but other sizes are suitable so the invention is not regarded as limited to these values. The spacing between the projections is chosen to permit the liquid percolation to take place. For example, the projections may be regularly spaced with the spacing being from about 5% to about 80% of the maximum dimension of a projection. In a particular embodiment of the invention the projections may be regularly-spaced bubbles which are circular as seen in plan view and which are located with their centres spaced apart by a length about one and one-eighth times the diameter of a projection, in a regular array.

While the invention is not regarded as limited to particular values for the dimensions of the projections, suitable values for a, b and c (Figures 1 and 2) are as follows:-

a 2 to 5 mm

b 5 to 15 mm

c 1 to 5 mm.

Variations of the basic concept will occur to a man skilled in the art.

CLAIMS

1. A tube or bag in which a wall or a substantial part of a wall of the tube or bag has scattered inwardly-projecting members.

2. A tube or bag according to claim 1, in which the projecting members are formed by bubbles of the material of the wall containing entrapped air or gas.

3. A method of preventing undesired obturation of a liquid path through a tube which involves providing scattered inwardly-projecting members on the tube wall inner surface or on a substantial part thereof.

4. A tube or bag substantially as herein described with reference to and as illustrated in the accompanying drawings.

5. Any novel combination or sub-combination disclosed and/or illustrated herein.

Published 1988 at The Patent Office. State House. 66 71 High Holborn, London WC1R 4TP. Further copies may be obtained from The Patent Office, Sales Branch, St Mary Cray. Orpington, Kent BR5 3RD. Printed by Multiplex techniques ltd, St Mary Cray, Kent. Con. 1/87.