PCT WORLD INTELLECTUAL PROPERTY ORGANIZATION
International Bureau

INTERNATIONAL APPLICATION PUBLISHED UNDER THE PATENT COOPERATION TREATY (PCT)

(51) International Patent Classification 6 : G08B 21/00, A61G 12/00

A1

(11) International Publication Number: **WO 99/44180**

(43) International Publication Date: 2 September 1999 (02.09.99)

(21) International Application Number: PCT/US99/04088

(22) International Filing Date: 25 February 1999 (25.02.99)

(30) Priority Data:
09/031,363 26 February 1998 (26.02.98) US

(71) Applicant: BED-CHECK CORPORATION [US/US]; 222 E. 1st Street, Tulsa, OK 74103 (US).

(72) Inventors: LOVELY, Patrick, W.; 1839 E. 32nd Place, Tulsa, OK 74105 (US). HOLMES, Fred, H.; Route 3, Box 79, Cleveland, OK 74020 (US). SMITH, Toby, E.; 4001 S. Birch Place, Broken Arrow, OK 74011 (US).

(74) Agent: WATT, Terry, L.; Fellers, Snider, Blankenship, Bailey & Tippens, P.C., Suite 800, 321 S. Boston Avenue, Tulsa, OK 74103-3318 (US).

(81) Designated States: AL, AM, AT, AU, AZ, BA, BB, BG, BR, BY, CA, CH, CN, CU, CZ, DE, DK, EE, ES, FI, GB, GE, GH, GM, HU, ID, IL, IS, JP, KE, KG, KP, KR, KZ, LC, LK, LR, LS, LT, LU, LV, MD, MG, MK, MN, MW, MX, NO, NZ, PL, PT, RO, RU, SD, SE, SG, SI, SK, SL, TJ, TM, TR, TT, UA, UG, UZ, VN, YU, ZW, ARIPO patent (GH, GM, KE, LS, MW, SD, SL, SZ, UG, ZW), Eurasian patent (AM, AZ, BY, KG, KZ, MD, RU, TJ, TM), European patent (AT, BE, CH, CY, DE, DK, ES, FI, FR, GB, GR, IE, IT, LU, MC, NL, PT, SE), OAPI patent (BF, BJ, CF, CG, CI, CM, GA, GN, GW, ML, MR, NE, SN, TD, TG).

Published
With international search report.
Before the expiration of the time limit for amending the claims and to be republished in the event of the receipt of amendments.

(54) Title: MICROPROCESSOR BASED BED PATIENT MONITOR

(57) Abstract

This invention relates generally to monitoring systems and more particularly concerns devices and systems used to monitor patients lying in hospital beds or in other care giving environments. According to a first aspect of the instant invention, a microprocessor based patient monitor is disclosed which includes a loudspeaker driven by a power amplifier responsive to an input signal derived from a programmable volume control. The microprocessor synthesizes any one of multiple alarm sounds under software control, operates the programmable volume control of the alarm system and activates and deactivates the alarm in response to the electronic signals received from the sensor and a user interface. An electrically erasable programmable read-only memory accessible by the processor stores data which can be modified to tailor the operations of the monitor to suit a variety of different needs. According to still another aspect of the instant invention, a microprocessor-based patient monitor is disclosed which has a personality that is defined by software that is resident in modifiable nonvolatile memory, which software can thus be altered to change the programmed responses of the monitor. Finally, a software and hardware system is provided for reading information from and writing information to modifiable nonvolatile RAM within a microprocessor-based patient monitor. This information might be parameter settings, data values, or computer instructions.

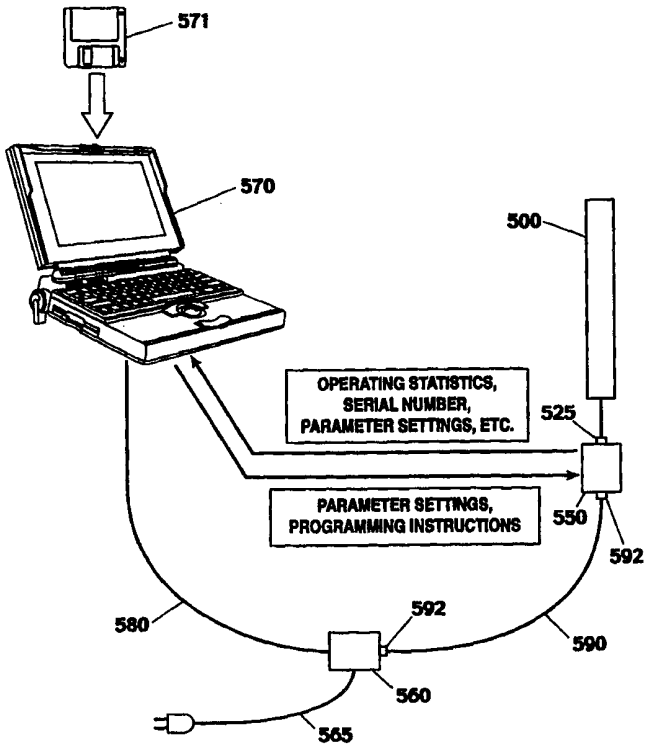

FOR THE PURPOSES OF INFORMATION ONLY

Codes used to identify States party to the PCT on the front pages of pamphlets publishing international applications under the PCT.

AL	Albania	**ES**	Spain	**LS**	Lesotho	**SI**	Slovenia
AM	Armenia	**FI**	Finland	**LT**	Lithuania	**SK**	Slovakia
AT	Austria	**FR**	France	**LU**	Luxembourg	**SN**	Senegal
AU	Australia	**GA**	Gabon	**LV**	Latvia	**SZ**	Swaziland
AZ	Azerbaijan	**GB**	United Kingdom	**MC**	Monaco	**TD**	Chad
BA	Bosnia and Herzegovina	**GE**	Georgia	**MD**	Republic of Moldova	**TG**	Togo
BB	Barbados	**GH**	Ghana	**MG**	Madagascar	**TJ**	Tajikistan
BE	Belgium	**GN**	Guinea	**MK**	The former Yugoslav Republic of Macedonia	**TM**	Turkmenistan
BF	Burkina Faso	**GR**	Greece			**TR**	Turkey
BG	Bulgaria	**HU**	Hungary	**ML**	Mali	**TT**	Trinidad and Tobago
BJ	Benin	**IE**	Ireland	**MN**	Mongolia	**UA**	Ukraine
BR	Brazil	**IL**	Israel	**MR**	Mauritania	**UG**	Uganda
BY	Belarus	**IS**	Iceland	**MW**	Malawi	**US**	United States of America
CA	Canada	**IT**	Italy	**MX**	Mexico	**UZ**	Uzbekistan
CF	Central African Republic	**JP**	Japan	**NE**	Niger	**VN**	Viet Nam
CG	Congo	**KE**	Kenya	**NL**	Netherlands	**YU**	Yugoslavia
CH	Switzerland	**KG**	Kyrgyzstan	**NO**	Norway	**ZW**	Zimbabwe
CI	Côte d'Ivoire	**KP**	Democratic People's Republic of Korea	**NZ**	New Zealand		
CM	Cameroon			**PL**	Poland		
CN	China	**KR**	Republic of Korea	**PT**	Portugal		
CU	Cuba	**KZ**	Kazakstan	**RO**	Romania		
CZ	Czech Republic	**LC**	Saint Lucia	**RU**	Russian Federation		
DE	Germany	**LI**	Liechtenstein	**SD**	Sudan		
DK	Denmark	**LK**	Sri Lanka	**SE**	Sweden		
EE	Estonia	**LR**	Liberia	**SG**	Singapore		

MICROPROCESSOR BASED BED PATIENT MONITOR

RELATED APPLICATIONS

This application is a continuation-in-part of application serial number 09 / 042,363, filed on February 26, 1998, the disclosure of which is incorporated herein by reference.

BACKGROUND OF THE INVENTION

This invention relates generally to monitoring systems and more particularly concerns devices and systems used to monitor bed patients in hospital or other care giving environments.

It is well documented that the elderly and post-surgical patients are at a heightened risk of falling. There are many reasons for this but, broadly speaking, these individuals are often afflicted by gait and balance disorders, weakness, dizziness, confusion, visual impairment, and postural hypotension (i.e., a sudden drop in blood pressure that causes dizziness and fainting), all of which are recognized as potential contributors to a fall. Additionally, cognitive and functional impairment, and sedating and psychoactive medications are also well recognized risk factors.

A fall places the patient at risk of various injuries including sprains, fractures, and broken bones — injuries which in some cases can be severe enough to eventually lead to a fatality. Of course, those most susceptible to falls are often those in the poorest general health and least likely to recover quickly from their injuries. In addition to the obvious physiological consequences of fall-related injuries, there are also a variety of adverse economic and legal consequences that include the actual cost of treating the victim and, in some cases, caretaker liability issues.

In the past, it has been commonplace to treat patients that are prone to falling by limiting their mobility through the use of restraints, the underlying theory being that if the patient is not free to move about, he or she will not be as likely to fall. However, research has shown that restraint-based patient treatment strategies are often more harmful than beneficial and should generally be avoided — the emphasis today being on the promotion of mobility rather than immobility. Among the more successful mobility-based strategies for fall prevention include interventions to improve patient strength and functional status, reduction of environmental hazards, and staff identification and monitoring of high-risk hospital patients and nursing home residents.

Of course, monitoring high-risk patients, as effective as that care strategy might appear to be in theory, suffers from the obvious practical disadvantage of requiring additional staff if the monitoring is to be in the form of direct observation. Thus, the trend in patient monitoring has been toward the use of electrical devices to signal changes in a patient's circumstance to a caregiver who might be located either nearby or remotely at a central monitoring facility, such as a nurse's station. The obvious advantage of an electronic monitoring arrangement is that it

frees the caregiver to pursue other tasks away from the patient. Additionally, when the monitoring is done at a central facility a single nurse can monitor multiple patients which can result in decreased staffing requirements.

Generally speaking, electronic monitors work by first sensing an initial status of a patient, and then generating a signal when that status changes, e.g., he or she has sat up in bed, left the bed, risen from a chair, etc., any of which situations could pose a potential cause for concern in the case of an at-risk patient. Electronic bed and chair monitors typically use a pressure sensitive switch in combination with a separate monitor / microprocessor. In a common arrangement, a patient's weight resting on a pressure sensitive mat (i.e., a "sensor" mat) completes an electrical circuit, thereby signaling the presence of the patient to the microprocessor. When the weight is removed from the pressure sensitive switch, the electrical circuit is interrupted, which fact is sensed by the microprocessor. The software logic that drives the monitor is typically programmed to respond to the now-opened circuit by triggering some sort of alarm — either electronically (e.g., to the nursing station via a conventional nurse call system) or audibly (via a built-in siren). Some examples of devices that operate in this general fashion may be found in U.S. Letters Patent Nos. 4,484,043, 4,565,910, 5,554,835, and 5,634,760, the disclosures of which are incorporated herein by reference.

That being said, patient monitoring systems that rely on sensor mats to detect the presence of a patient in a bed suffer from a variety of drawbacks. For example, the bed monitoring systems currently available in the marketplace feature externally accessible configuration switches that allow the caregiver to reconfigure the device at will and to adjust parameters such as the duration of the alarm, and the time lapse between the sensing of the "empty bed" condition and the sounding of an alarm. External switching makes tampering with the system extremely easy and makes it more difficult to establish and maintain a hospital-wide policy with respect to monitor settings.

A further problem with conventional bed monitoring systems is that they use oscillating transducers in their alarm audio circuits, resulting in single frequency audio alarms. Since bed monitor alarms are frequently employed in environments in which a multiplicity of other problems might also trigger audio alarms, if the single alarm sound provided by the bed monitor happens to be similar to one or more other alarm sounds heard in response to different monitors, confusion and consequential lengthened response times to patient monitor alarms may result.

Those skilled in the art know that there are many nurse call station configurations and it is to the economic advantage of a manufacturer to be able to accommodate all of them. However, another problem with the present state-of-the-art in bed monitoring systems is that they are typically pre-configured internally at the factory for one particular type of nurse call station. Thus, if the unit is misconfigured when it arrives at an installation, it may be necessary

to summon a medical technician to reconfigure it, since internal modifications to the unit are required to adapt it to different call station types. This can result in additional expense and delay in getting the unit correctly configured and into operation. Further, there are many hospitals that use multiple incompatible nurse call system types, each having been separately added as a new building or wing was constructed. The inability to quickly and reliable move electronic monitors between these systems means that the hospital will generally be required to maintain excess inventory of each type of compatible monitor, a result that ultimately adds to the health care costs borne by the consumer / patient.

Still another failure in known bed monitoring systems is that they do not provide a method of accumulating statistical data relating to the operation of the unit including, for example, the response times of the caregiver to alarm conditions. This sort of information could be very helpful to the maintenance and proper operation of the monitor, and for caregiver quality control purposes.

It is, therefore, a primary object of this invention to provide a patient monitor that is microprocessor-based so as to be reconfigurable by the uploading of configuration data to an electronically erasable programmable read only memory accessible by the microprocessor. A further object of this invention is to provide a microprocessor based patient monitor which synthesizes multiple alarm sounds in software for selection by the caregiver. It is also an object of this invention to provide a microprocessor based patient monitor having a nurse call interface allowing interconnection with any nurse call station without modification of the monitor. Yet another object of this invention is to provide a microprocessor based patient monitor having an electrically erasable programmable read only memory accessible by the microprocessor for logging statistical data with respect to the use of the monitor and the response time of the caregiver using the monitor. Another object of this invention is to provide a microprocessor based bed patient monitor which permits the downloading of the logged statistical data to a host microprocessor connected to the system. It is still another object of the instant invention to provide a system for configuration of monitor parameters and for recalling and analyzing statistical data accumulated therein.

Heretofore, as is well known in the bed monitor arts, there has been a need for an invention to address and solve the above-described problems. Accordingly, it should now be recognized, as was recognized by the present inventor, that there exists, and has existed for some time, a very real need for a electronic patient monitor that would address and solve the above-described problems.

Before proceeding to a description of the present invention, however, it should be noted and remembered that the description of the invention which follows, together with the accompanying drawings, should not be construed as limiting the invention to the examples (or preferred embodiments) shown and described. This is so because those skilled in the art to

which the invention pertains will be able to devise other forms of this invention within the ambit of the appended claims.

SUMMARY OF THE INVENTION

In accordance with the invention, a patient monitor is provided in which a processor receiving electronic signals from a sensor indicating the presence on the sensor and absence from the sensor of a patient is combined with an alarm system which includes a loudspeaker driven by a power amplifier which responds to an input signal derived from a programmable volume control to produce an aural alarm. The processor synthesizes at least one and preferably multiple alarm sounds under software control, operates the programmable volume control of the alarm system to select the decibel level of the alarm and activates and deactivates the alarm in response to the electronic signals received from the sensor and a user interface. An electrically erasable programmable read-only memory accessible by the processor stores a plurality of alarm sounds for selection by the processor for synthesis of the selected alarm sound. In addition, the electrically erasable programmable read-only memory stores multiple decibel levels for selection by the processor of the desired decibel level of the alarm sound. In the preferred embodiment, the patient monitor will be used to sense the presence of patient who is lying in a bed, however, it should be noted and remembered this monitor could also be used in other sorts of applications, including with chair and toilet monitors.

Preferably, the electrically erasable programmable read-only memory also permits storage of a plurality of options for the delay time between initiation of the absence of a patient from the sensor and the activation of the alarm by the processor. Furthermore, the monitor is preferably provided with an external switch connected to the processor for caregiver selection of the delay time from the plurality of delay time options.

It is also preferred that the electrically erasable programmable read-only memory log usage data with respect to the monitor including the total hours of use of the monitor, the total time of alarms sounded by the monitor, the total number of alarms sounded by the monitor and the response time between the most recent sounding of an alarm and a subsequent operation of the monitor by the caregiver. The monitor will include a port for downloading the log usage data to a host computer.

The monitor also includes a nurse call interface having a relay which is energized when the power amplifier is de-energized and which has a normally opened contact, a normally closed contact and a common contact for interconnecting the monitor to a nurse call system to one of the normally opened and normally closed contacts so that the monitor requires no modification to accommodate the type of nurse call station with which the monitor is used.

According to still another aspect of the instant invention, there is provided a bed monitor / computer system which allows easy on-site configuration of a monitor to work with different nurses stations. In more particular, the monitor of the instant invention is designed to be reconfigured through the use of a host computer, which obviates the need for internal modifications of monitor parameters through the use of dip switches, rotary dials, etc., which

are commonly used in the industry. In the preferred embodiment, a standard computer interface, such as serial interface, is provided as a means for communication between the monitor and a separate host computer. This allows the unit to be readily reprogrammed without risking the exposure of the internal electronic components to the environment.

According to still a further aspect of the instant invention, there is provided a software system for providing the monitor with new programming instructions or a new "personality" which will enable it to operate with potentially any plug-compatible nurse call station. In the preferred embodiment, the internal operating logic and various parameters which change the operation of the device to match a particular nurse call station are preferably stored in nonvolatile flash-type RAM which is RAM that can be modified on demand through the use of a host computer-to-patient monitor transfer. One obvious advantage of this arrangement is that it eliminates the many problems associated with mechanical configuration switches, such as dip switches and rotary dials, while providing an easy, inexpensive, and reliable way of upgrading or otherwise modifying the functionality of a monitor while it is in the field.

The foregoing has outlined in broad terms the more important features of the invention disclosed herein so that the detailed description that follows may be more clearly understood, and so that the contribution of the instant inventor to the art may be better appreciated. The instant invention is not to be limited in its application to the details of the construction and to the arrangements of the components set forth in the following description or illustrated in the drawings. Rather, the invention is capable of other embodiments and of being practiced and carried out in various other ways not specifically enumerated herein. Additionally, the disclosure that follows is intended to cover all alternatives, modifications and equivalents as may be included within the spirit and scope of the invention as defined by the appended claims. Further, it should be understood that the phraseology and terminology employed herein are for the purpose of description and should not be regarded as limiting, unless the specification specifically so limits the invention.

While the instant invention will be described in connection with a preferred embodiment, it will be understood that it is not intended to limit the invention to that embodiment. On the contrary, it is intended to cover all alternatives, modifications and equivalents as may be included within the spirit and scope of the invention as defined by the appended claims.

BRIEF DESCRIPTION OF THE DRAWINGS

Other objects and advantages of the invention will become apparent upon reading the following detailed description and upon reference to the drawings in which:

Figure **1** is a block diagram illustrating a preferred embodiment of the monitor;

Figure **2** is a schematic diagram illustrating a portion of a preferred embodiment of the processor of the monitor;

Figure **3** is a schematic diagram illustrating a portion of a preferred embodiment of the processor of the monitor;

Figure **4** is a schematic diagram illustrating a preferred embodiment of the user interface of the monitor;

Figure **5** is a schematic diagram illustrating a preferred embodiment of the audio section of the monitor;

Figure **6** is a schematic diagram illustrating a preferred embodiment of the signal condition circuit of the monitor;

Figure **7** is a schematic diagram illustrating a preferred embodiment of the non-volatile memory of the monitor;

Figure **8** is a schematic diagram illustrating a preferred embodiment of the nurse call interface of the monitor;

Figure **9** is a schematic diagram of a preferred embodiment of the power supply of the monitor;

Figure **10** is a flow diagram illustrating a preferred embodiment of a cold start routine of the monitor;

Figure **11** is a flow diagram illustrating a preferred embodiment of the executive routine of the monitor;

Figure **12** is a flow diagram illustrating a preferred embodiment of the hold mode routine of the monitor;

Figure **13** is a flow diagram illustrating a preferred embodiment of the monitor routine of the monitor;

Figure **14** is a flow diagram illustrating a preferred embodiment of a portion of the alarm mode of the monitor;

Figure **15** is a flow diagram of another portion of the alarm mode routine of the monitor;

Figure **16** is a flow diagram illustrating a portion of a preferred embodiment of the program mode of the monitor;

Figure **17** is a flow diagram illustrating a portion of a preferred embodiment of the program mode of the monitor;

Figure **18** is a flow diagram illustrating a portion of a preferred embodiment of the program mode of the monitor;

Figure **19** is a flow diagram illustrating a preferred embodiment of the data logger subroutine of the monitor; and

Figure **20** is a flow diagram illustrating a preferred embodiment of the pull-out protection subroutine of the monitor.

Figure **21** contains an illustration of the general environment of the instant invention, wherein a host computer is connected to the monitor for purposes of data transfer.

Figure **22** illustrates the main hardware elements of the reprogrammable monitor embodiment.

Figure **23** contains a flow chart that illustrates the principle computer steps in the personality loading routine.

Figure **24** is a flow chart of the principle steps in the parameter recall routine, wherein data is passed from the monitor to the host CPU.

DETAILED DESCRIPTION OF THE INVENTION

Microprocessor-Based Patient Monitor

According to a first aspect of the instant invention, there is provided a microprocessor based patient monitor that offers improved functionality in comparison with known control units by introducing added features and improvements in the intuitiveness of the operation. As is illustrated in Figure **1**, a preferred embodiment of the instant monitor hardware has seven functional blocks including a processor **10**, a user interface **40**, an audio section **70**, a signal conditioning circuit **100**, a non-volatile memory **130**, a nurse call interface **160** and a power supply **190**.

As is made clear in Figure **1**, the microprocessor **10** is responsible for various functions within the monitor including managing its user interface **40**, communicating with the nurse call interface **160**, and controlling the signal condition circuit **100** / audio section **70**. Additionally, the processor **10** is able to retrieve from and store to non-volatile memory **130** as needed.

As shown in Figures **2** and **3**, the processor **10** includes a microcontroller **11**, a latching display driver **13** and a latch **15**. Since the microcontroller **11** is synthesizing the alarm sound in software, it is important to run the microcontroller **11** at its maximum operating speed. The microcontroller **11** preferably has fourteen general purpose I/O pins grouped into a port A and a port B and one interrupt request input IRQ. The pins of the microcontroller **11** are preferably utilized as follows:

Port A Bit 0: via a multifunction bus **17** to D1 of the latch **15**, A_{IN} of the latching display driver **13**, INC of a volume control 71 in **the** audio section **70**, via a diode **25** to Ul11 of the user interface **40** and via a resistor R_1 to VCC;

Port A Bit 1: via the multifunction bus **17** to D2 of the latch **15**, B_{IN} of the latching display device **13** and U/D of the volume control **71**, via a diode **27** to UI12 of the user interface and via a resistor R_2 to VCC;

Port A Bit 2: via the multifunction bus **17** to D3 of the latch **15** and C_{IN} of the latching display driver **13**;

Port A Bit : via the multifunction bus **17** to D4 of the latch **15** and D_{IN} of the latching display driver **13**;

Port A Bit 4: to Key Input Enable of the user interface **40**;

Port A Bit 5: via the multifunction bus **17** to D6 of the latch **15**;

Port A Bit 6: to LE of the latching display driver **13**;

Port A Bit 7: to CLK of the latch **15**;

Port B Bit 0: to SDA of the non-volatile memory **130** (EEPROM Data), via a resistor R_3 to VCC and the power supply **190**;

Port B Bit 1: to SCL of the non volatile memory **130** (EEPROM clock), via a resistor R_6 to VCC and the power supply **190**;

Port B Bit 2: to the nurse call interface **160** (pull out detection);

Port B Bit 3: to CS of the volume control **71** (volume);

Port B Bit 4: to VH of the volume control **71** (audio out);

Port B Bit 5: to the signal condition circuit **100** (mat detection);

IRQ: (Interrupt Request) to the signal condition circuit **100** (mat input);

Reset: to VCC through the time delay R_{13}/C_{13}; and

OSCI & OSC2: to the master clock for the microcontroller **11**.

Additionally, the remaining pins of the latching display driver **13** are preferably used as follows:

A_{OUT}: Via a resistor R_4 to UI1 of the user interface **40**;

B_{OUT}: Via a resistor R_5 to UI2 of the user interface **40**;

C_{OUT}: Via a resistor R_7 to UI3 of the user interface **40**;

D_{OUT}: Via a resistor R_8 to UI4 of the user interface **40**;

E_{OUT}: Via a resistor R_{10} to UI5 of the user interface **40**;

F_{OUT}: Via a resistor R_{11} to UI6 of the user interface **40** ;

G_{OUT}: Via a resistor R_{12} to UI7 of the user interface **40**; and

LT and B1: to VCC

The remaining pins of the latch **15** are preferably used as follows:

Q_1: via a resistor R_{14} to UI8 of the user interface **40**;

Q_2: via a resistor R_{15} to UI9 of the user interface **40**;

Q_3: via a resistor R_{16} to UI10 of the user interface **40**;

Q_4: to the nurse call interface **160**;

Q_5: unused;

Q_6: to the nurse call interface **160**; and

D5 and CLR: to VCC.

The multifunction bus **17** to D1, 2, 3, 4 and 6 of the latch **15** capitalizes on the bidirectional feature of the microcontroller **11** to create a local data bus. This allows the

associated pins PA0, 1, 2, 3 and 5 of the microcontroller **11** to be used for several functions, reducing the total number of I/0 pins required and allowing for a smaller, less expensive microcontroller **11** to be used. The multifunction bus **17** sources information for a numeric display **41** via the latching display driver **13**, selects annunciators **43** to be illuminated via the latch **15**, energizes the nurse call relay K1 via the latch **15**, provides up/down information for the programmable volume control **71** and inputs the status of the keypad **45**. Operation of the multifunction bus **17** is purely under software control. The microcontroller **11** contains internal RAM **19**, EPROM **21**, and a Timer **23**. One suitable hardware choice for the microcontroller **11** is a Motorola MC68HC705J2, the latching display driver **13** is a Motorola 74HC4511 and the latch **15** is a Motorola 74HC174.

A resistor R_{13} and capacitor C_{13} connected between the power source VCC and the RESET port of the microcontroller **11** provide time delay at initialization and a typical clock circuit is connected to the OSC1 and OSC2 ports of the microcontroller **11**.

Turning to Figure **4**, the user interface **40** preferably consists of the numeric display **41**, an annunciator bank **43** including a HOLD annunciator **47**, a MON annunciator **49** and an ALARM annunciator **51** and the keypad **45** including a reset switch **53** and a delay adjust switch **55**. Needless to say, many other arrangements of the control switches and displays are possible and are well within the capability of one of ordinary skill in the art to devise.

The numeric display **41** is a seven segment display driven by the latching display driver **13**. The preferred latching display driver **13**, such as the Motorola 74HC4511, takes Binary Coded Decimal (BCD) in and decodes it into the appropriate segments to display the desired number. The BCD input is provided by D1-D4 of the multifunction bus **17**. The information is latched into the latching display driver **13** by Port A Bit 6. The latching operation frees up the multifunction bus **17** for other purposes while maintaining a stable display. The latching display driver **13** provides a blanking function, a totally dark display, by writing a number greater than nine to the BCD input. Four bits of data provide **16** possible combinations (0-15), while only ten combinations are defined in BCD (0-9). The other six combinations (10-15) result in turning off all of the display segments. The numeric display **41** is used to display the seconds of delay which precede an alarm in normal operation of the monitor. In addition, the display **41** is used to show selected options during the local programming mode, as is hereinafter further described in relation to the monitor software. All three annunciators, **43**, **45** and **47**, are LED's driven by the latching display driver **13**. The preferred latching display driver **13**, a Motorola 74HC4511, is capable of sourcing **20** milliamps per output **50**. No additional drive is necessary to each LED. The driver **13** has a hex latch (six individual D flip/flops with a common clock line). Only five latch outputs are implemented and one of those is unused in the current software. Q1 through Q3 are used for the annunciators **47**, **49** and

51, respectively. By using a latch **15** with sufficient drive capability, the latching display driver **13** provides the source current to illuminate each LED and also latches the data so that the annunciators **43**, **45** and **47** remain stable while the multifunction bus **17** is used for other purposes. To turn on a particular annunciator **47**, **49** or **51**, the processor **10** raises the appropriate bit of the multifunction bus **17**, D1 for ALARM **47**, D2 for MON **49** or D3 for HOLD **51**, and then toggles Port A Bit 7 to latch the data. Operating characteristics for each mode are hereinafter described in relation to the monitor software. The reset switch **53** and delay adjust switch **55** are inputted to the processor **10** on bits D1 and D2 of the multifunction bus **17**. The two switches **53** and **55** share a common select line so a read of either switch **53** or **55** always reads both switches **53** and **55**. To accomplish a read, the processor **10** must make Port A Bit 0 and Port A Bit 1 inputs. The switches **53** and **55** are then read by taking Port A Bit 4 low. The two inputs are pulled up by resistors R_1 and R_2 and these two bits may be pulled low through diodes D_1 and D_2 respectively. This can only happen if the appropriate switch **53** or **55** is closed and the key enable line is low.

Looking now at Figure **5**, the audio section **70** consists of a programmable volume control **71**, a power amplifier **73** and a loudspeaker **75**. The audio is a single bit square wave generated by the processor **10** under software control. The audio signal is divided to the requested volume by the programmable volume control **71**, the power amplified to a sufficient level to drive the loudspeaker **75**, and converted to audio by the loudspeaker **75**.

The volume control **71** is preferably a Xicor Corporation X9314 digital potentiometer. This integrated circuit performs the same function as a potentiometer except the wiper position VW is digitally positioned to any one of 32 (i.e., 0-31) possible steps. The circuit is designed such that position zero corresponds to a minimum volume (no sound) and position 31 is maximum volume. To control the volume chip select CS, which is connected to VCC via a pull-up resistor R_{32}, is set low (Port B Bit 3), the up-down pin U/D (mfb D1) is set low to reduce volume or high to increase volume, and the increment-decrement INC pin (mfb D0) is toggled the appropriate number of times to reach the new wiper position.

The multifunction bus **17** is used for the U/D control and for the INC control since these signals have no effect on the chip in the absence of a valid chip select signal. Therefore, using mfb D1 and mfb D2 will not effect the volume when used for other purposes and the chip select signal (active low) is high. The output of the programmable volume control **71** is AC coupled by a resistor R_{33} and capacitor C_5 and directed to the input of the audio power amplifier **73**.

The power amplifier is preferably a National Semiconductor LM388 audio amplifier which has adequate drive for the required volume levels and requires relatively few discrete components to produce a viable audio amplifier. It is used in its simplest configuration and

directly drives the unit's loudspeaker **75**. It preferably has a fixed gain of 20 and a resistor R_{26} scales the audio appropriately for the desired maximum output level.

The loudspeaker **75** is preferably a simple two inch polycone speaker. However, it should be noted that other arrangements are certainly possible and it is within the ordinary skill of in the art to devise. By way of example only, the loudspeaker element might be a piezoelectric device capable of generating an audible alarm signal. Thus, when the term "loudspeaker" is used hereinafter, that term should be construed in the broadest possible sense to include any device capable of emitting an audible alarm signal under the control of the microprocessor **10**. Additionally, when loudspeaker is used herein that term should also be taken to include an associated power amplifier, if one is necessary from the context of its use (as it usually will be). Finally, it should also be noted that it is not an essential element of the instant invention that the loudspeaker **75** be found within the body of the monitor. The speaker **75** could also be mounted externally thereto, and, as an extreme example, might by located in an adjacent hallway or at the nurses station.

The signal conditioning circuit **100**, shown in detail in Figure **6**, filters noise from the mat inputs JR1-1 and 2 and provides a reasonable degree of protection to the monitor from static discharge. Filtering at one input JR1-2 is accomplished by a single RC circuit including resistors R_{20} and R_{21} and a capacitor C_6 and at the other input JR1-1 by a simple RC circuit including resistors R_{19} and R_{31} and a capacitor C_3. This eliminates some noise and assists in increasing the immunity from static discharge. A static discharge to the monitor passes through the RC filters and is then clamped by surge limiting devices, RV_1 and RV_2 of Figure **6**. The combination of the first input components R_{20}, R_{21}, C_6 and RV_2 and the second input components R_{19}, R_{31}, C_3 and RV_1 should provide static protection far in excess of known monitors.

The non-volatile memory **130** illustrated in Figure **7** includes a 1 Kbit (128x8) electrically erasable programmable read only memory EEPROM **101**. It is connected via resistors R_{25} and R_{27} to the power supply interface connections J3-4 and J3-5. The actual IC chip is preferably a Microchip X24LC01 which uses a two wire serial interface to communicate with the processor **10**. The interface is based on the I^2C bus which has become the predominant standard for low cost inter-chip communications (i.e., "Inter-IC" bus, which is a standard means of providing a two-wire communication link between integrated circuits) . Detailed information on the chip and the I^2C bus may be found in the Microchip Nonvolatile Memory Products databook. The EEPROM **101** is used to store operating characteristics, usage information and device specific information such as a repair log and unit serial number. The operating characteristics are defined, in part, by a collection of user-modifiable parameters

that control various aspects of the monitor's operations, including, for example, the type of alarm tone (e.g., Figure **15**, item **329**), the relay action, the hold time delay, and the volume of the alarms. These memory locations may be modified either through use of the front panel control switches or, as hereinafter described, via a computer program that is executing on a remote host connected to the monitor via an electronic interface, such as a serial port. Usage information might consist, by way of example only, of an hour meter which logs total hours of use of the monitor, the total time alarming, the total number of alarms, the response time to the last alarm, and / or the date and time of past alarms (the calendar date and time being provided by, for example, a date / time chip **595** of the sort illustrated in Figure **22**).

Downloading usage information to a host computer allows a number of diagnostic statistics to be calculated, including the "average time to respond". This information is preferably only be written by the monitor, and read only to an inquiring host computer. Read only status is purely a software function of the host. Device specific information would typically not be used by the monitor and is never written to or read by the monitor. It is preferably written only at the time of manufacture or time of repair by an external host computer. The information is intended for use by the factory, a repair station, or a facilities biomedical staff and might include, for example, the date of the last ten repairs and corresponding work order numbers and the unit's serial number.

Turning now to Figure **8**, the nurse call interface **160** uses a relay K1 to provide isolation between the monitor circuitry and the nurse call system. A normally open contact **161**, a normally closed contact **163** and a common contact **165** of the relay K1 are connected to a connector J2. The nurse call cord (not shown) plugs into this connector J2 and would typically be an RJ-45 or similar connector. Since there is always a potential for inadvertent disconnection of a connector J2, two additional pins J2-4 and 5 are used in the connector J2 to provide a continuity loop. By monitoring this loop, the processor **10** can detect a pulled-out nurse call cord. If this condition is detected, a distinct in-room alarm is sounded. Pull-out protection may be disabled via the profile stored in the nonvolatile memory **130** when the system is used in a facility without a nurse call system or in a home. The relay K1 is energized in the non-alarming state. This effectively reverses the contacts **161** and **163** so that the normally open contact **161** appears to be normally closed and vice versa. Thus, a nurse call is issued whenever power is interrupted to the monitor. This provides a fail safe on the power supply **190** and its interconnects. A single RC filter consisting of a resistor R_{18} and a capacitor C_4 provides static protection for the processor **10**. The relay K1 is turned on by the transistor Q1 via a current limiting resistor R_{23} and a diode D_3 which absorbs the inductive kick which occurs when the relay K1 is de-energized.

As shown in Figure **9**, the power supply **190** includes an external connector J3. The connector J3 includes a transformer (not shown) connected between two pins J3-1 and J3-2 of the connector. Power VCC is brought into the monitor through a voltage regulator **191** connected to the first connector pin J3-1. Two additional pins J3-4 and 5 of this connector J3 are used for the read/write interface of the external EEPROM 101. Filter capacitors C_{11} and C_{12} are preferably connected on either side of the voltage regulator **191**.

Monitor Front Panel Control Functions

The internal software allows the monitor to perform a variety of functions. As illustrated in Figure **4**, the user interface **40** includes inputs allowing a user to modify control unit actions via the reset button **53** and to adjust the delay via the delay adjust button **55** and outputs for controlling operation of the 0 through 9 numeric display **41**, the status annunciators **43** and various aural signals.

An idle mode (HOLD), which is active when the monitor is not monitoring, enables automatic advancement to the monitor mode, manual override for immediate advancement to the monitor mode, adjustment of the delay time, aural indications of any unsafe conditions and logging of hours in use. The monitor mode (MON) enables monitoring of the patient for activity within the bed which could be a precursor for a bed evacuation, adjustment of the delay time, manual return to the idle mode (HOLD), automatic advancement to the alarm mode (ALARM), aural indications of any unsafe hardware conditions and logging of hours in use. The alarm mode (ALARM) enables generation of a nurse call through the nurse call system **160**, aural in-room alarm, manual return to the idle mode (HOLD) and logging of response time and total alarm time. A program mode enables the user to customize the features of the monitor and to update the non-volatile memory **130** with user selected parameters.

All functions which utilize the user interface **40** are consistent with the nomenclature which the user sees on the labels of the buttons **53** and **55** and on the numeric display **41**. For example, any features which use the reset button **53** have an intuitive connection to the word "reset". Likewise, the delay adjust button **55**, which preferably features a triangle pointing up, causes an upward adjustment in the numeric display **41** with appropriate roll over at a maximum value.

Internal Software / Logic Functions

Figure **10** illustrates the main steps that are executed within the monitor as part of a power-up (i.e., cold start) sequence. In the preferred embodiment, a cold start **201** will cause the processor **10** to automatically enter into the HOLD mode as part of step **201**. Then, the system initialize hardware **203** and variables **205**, after which it will then set the I^2C interface to inputs **207** to determine whether the interface is already being used, for example to change

the programs in the EEPROM **101**. An inquiry is then made as to whether the I^2C is busy **209**. If the response to this inquiry is "YES," then the inquiry is repeated until the response is "NO." If a "NO" response is received, the system proceeds to recall parameters stored previously within EEPROM **213**. The system will next inquire as to whether the delay time equals nine (step **215**). If the response to this inquiry is "YES," the system will next inquire as to whether the reset is pressed **217**. If the response to either the inquiry as to whether the delay time equals nine **215** or whether the reset is pressed **217** is "NO," then the system proceeds to go to executive routine **219**. If the response to the inquiry as to whether the reset is pressed **217** is "YES," the system proceeds to go to local configuration **221**.

As is illustrated in Figure **11**, if the system has gone into executive **223** mode, the system will again inquire as to whether the I^2C is busy **225**. If the response to this inquiry is "YES," the system will continue to inquire as to whether the I^2C bus is still busy **227**. As long as the response to this inquiry is "YES," the inquiry continues. If the response to the inquiry as to whether the I^2C bus is still busy **227** is "NO," then the system will go to cold **229** and resume from the cold start **201** as shown in Figure **10**. If, however, on inquiry as to whether I^2C is busy **225** the response is "NO," the system proceeds to display delay time **231** on the display **41** and will turn on hold annunciator light **233** which is an indication to the caregiver that there is no weight on the mat used to monitor the patient's presence. The system then inquires as to whether it is time to log (step **235**). In the preferred embodiment, every six minutes or 1/10th of an hour the system will log the lapse of an increment so as to maintain a record of total hours of use of the monitor. If six minutes have not elapsed, the response to the inquiry is "NO" and the system proceeds to inquire as to whether the delay adjust switch is pressed **237**. If six minutes have elapsed, the response to the inquiry as to whether it is time to log **235** is "YES" and the system will proceed to call data logger **239** so as to register this increment. The system then continues to the delay adjust switch pressed inquiry **237** until another six minute interval has elapsed and the call data logger **239** is again cycled. If the response to the inquiry as to whether the delay adjust switch is pressed **237** is "NO," the system proceeds to inquire as to whether the mat is pressed **241**. If the response to the inquiry as to whether the delay adjust switch is pressed **237** is "YES," the system proceeds to increment delay **243** by stepping to the next of the nine increments available for delay as hereinbefore discussed and then inquires as to whether the mat is pressed **241**. If the response to the mat pressed inquiry **241** is "NO," the system will recycle to the time to log inquiry **235** and continue the process until the response to the mat pressed inquiry **241** is "YES," indicating that a patient is on the sensor mat. If the response to this inquiry is "YES," the system then proceeds to go to hold delay **245**.

Turning now to Figure **12**, representing the transient condition between the hold mode **201** and the monitor mode **273**, when the monitor is at hold delay **247**, the system will initialize hold timer to program value **249**. Generally, the hold timer will permit selection by the caregiver of from 1 to 20 seconds as the interval that the patient's weight must be on the sensor mat before monitoring of the patient's presence is initiated. In the preferred embodiment described herein, this available time interval is in a range of 1 to 9 seconds. The system then proceeds to initialize flasher timer **251**. The flasher timer establishes the flash interval for the attenuator indicating that a patient's weight is on the sensor mat. With the timers initialized, the system proceeds to get keys **253** by examining the switches **53** and **55** of the keypad **45**. Inquiry is first made as to whether the caregiver has operated the delay adjust **255**. A "YES" response indicating that the delay adjust switch **55** is depressed will result in an increment change **257**. If the response to the delay adjust inquiry **255** is "NO" or the increment change **257** is made, the system continues on to inquire as to whether the reset is pressed **259**. If the response to this inquiry is "NO," the system proceeds to inquire as to whether the hold time is expired **261**. If the response to this inquiry is "NO," the system inquires as to whether the flash time has expired **263**. If the flash time has expired, providing a YES response, the system will toggle the hold light and reset the timer **265**. If the flash time has not expired or has been reset, the system will proceed to inquire as to whether there is a weight on the mat **267**. If the response to this inquiry is "NO," the system will go to executive **219**, returning to the loop illustrated in Figure **11**. If the response to the weight on mat inquiry **267** is "YES," the system will perform a pullout check **269** to determine if there is an improper connection in the system. After performing the pullout check **269**, the system will return to the get keys step **253** of the hold delay loop **247**. If, in the operation of the hold delay loop **247**, the response to the reset pressed inquiry **259** or the hold time expired inquiry **261** is "YES," then the system will go to monitor **271**, as will hereinafter be described.

The HOLD mode **235** is characterized by a continuous hold indicator **47** and the number of seconds of delay time is displayed on the numeric display **41**. The nurse call relay K1 is energized (non-alarming state). There is no testing of the sensor validation input, there is no pull-out detection, and the keypad **45** is monitored at least **20** times per second except during tone generation. Upon pressing the delay adjust button **55**, the delay is bumped by one second and the display **41** is updated with the new delay time. After nine seconds, the delay time resets to one second. If the reset button **53** is pressed, a 1/2 second tone at 1kHz is generated. Software exits this loop and enters the pre-monitor phase of the monitor mode MON when weight is detected on the mat (IRQ goes low). During the hold mode HOLD, logging of hours in use occurs every 1/10th of an hour (six minutes).

The main monitor routine is illustrated in Figure **13**. When the system goes to monitor **273**, it will change the annunciator condition by turning on MON and turning off HOLD **275**.

Thus, the HOLD annunciator **47** will be de-energized and the monitor annunciator **49** energized. The system will then inquire as to whether it is time to log **277**, as has been hereinbefore explained. If the response to this inquiry is "YES," then the system will call data logger **279** to log the expiration of the six minute increment. If the answer to the inquiry as to time to log **277** is "NO," or if an increment has been logged, the system will proceed to a get keys status **281**. The system will inquire as to whether the delay adjust switch is pressed **283**. If the response to this inquiry is "YES," an increment change **285** will be made in the time delay. If the response to the delay adjust inquiry **283** is "NO" or the increment change **285** has been made, the system will proceed to inquire as to whether the reset is pressed **287**. If the response to this inquiry is "YES," the system will go to executive **289** and perform the loop illustrated in Figure **11**. If the response to the reset pressed inquiry **287** is "NO," the system will proceed to call pull-out **291** to determine whether there is an electrical connection failure in the system. The system then inquires as to whether there is a weight on the mat **293**. If the response to this inquiry is "YES," the system will return to the time to log step **277** of the monitor loop **273**. If the response to the inquiry as to weight on the mat **293** is "NO," the system will proceed to go to alarm **295**. The monitor mode **273** has a transient pre-monitor phase shown in Figure **12** and a steady-state monitor phase shown in Figure **13**. The pre-monitor state is characterized by a flashing hold indicator **47**. The LED flash period is .2 seconds on and .2 seconds off. During the pre-monitor phase, the nurse call relay K1 is energized (non-alarming state), nurse call pull-out protection is active, the sensor input is validated, the numeric display **41** continues to display delay time, and the keypad **45** is polled at least 20 times per second. If the software detects an improperly inserted nurse call connector, a tone will be generated, preferably sixteen cycles of 400Hz followed by 42 msec of silence, repeated four times, followed by a minimum of 320 msec of silence before repeating the entire process. Pressing the delay adjust button **55** will increment the delay time one second up to a maximum of nine seconds. The delay time then resets to one second. The numeric display **41** is updated with each change in the delay time. Pressing the reset button **53** will cause the monitor to immediately proceed to the monitor phase **273**. This mode expires after a programmable hold time. The hold time defaults to ten seconds but may be programmed by the user for any time from 1 to 10 seconds. Upon expiration of the hold time or upon pressing the reset button **53**, the software advances to the monitor phase **273**. The software will return to the hold mode **247** if weight is removed from the mat prior to entering the monitor phase **273**.

The monitor phase of the monitor mode **273** is characterized by a solid monitor status indicator **49**. During this phase, the sensor is monitored for weight on mat, the nurse call relay K1 is energized (non-alarming state), nurse call pull-out protection is active, the numeric display **41** continues to display the delay time, and the keypad **45** is polled at least 20 times per

second. If an improperly inserted nurse call cord is detected, the unit will sound an alarm as described in the pre-monitor phase. Pressing the delay adjust button **55** will advance the delay time one second up to a maximum of nine seconds. The delay time then resets to one second. The numeric display **41** is updated with each change in the delay time. Pressing the reset button **53** will return the software to the hold mode **247**, allowing removal of the patient from the bed. Since there must be weight on the mat to be in this mode **247**, the hold mode **247** will automatically advance to the pre-monitor phase of the monitor mode **273**. To improve functionality, the hold time will temporarily be set to 25 seconds when this path is taken to allow sufficient time to remove the patient from bed. If weight is removed from the mat, the software advances to the pre-alarm phase of the alarm mode **302**. That parameter "hours in use" is logged / incremented every 1/10th of an hour.

The alarm mode **301** illustrated in Figure **14** consists of a transient re-alarm phase and a steady state alarm phase. The pre-alarm phase is characterized by a flashing alarm indicator **51**. The flash period is .2 seconds on and .2 seconds off. During the pre-alarm phase the nurse call relay K1 is energized (non-alarming state), the mat input is monitored, and the keypad **41** is polled at least 20 times per second. Returning weight to the mat will cause the software to return to the monitor mode **273**. Pressing the delay adjust button **55** has no effect. Pressing the reset button **53** will return the software to the hold mode **247**. Since this mode **247** is only active with weight off the mat, the monitor will remain in hold upon returning to the hold mode **247**. This mode **247** expires after the number of seconds displayed in the numeric display **41** and then enters the alarm phase.

The alarm phase of the alarm mode **301** is characterized by a solid ALARM indicator **51** and an audible alarm. During this mode the nurse call relay K1 is operated in accordance with a pre-programmed protocol and the keypad **41** is polled at least 20 times per second. Pressing the delay adjust button **55** has no effect. The audible alarm will continue to sound until the reset button **53** is pressed, returning the unit to the hold mode **247**. The alarm preferably provides one of six possible user selectable alarms (see, for example, **329**) including a 1kHz beep in intervals of .5 seconds on and .5 seconds off, a 1kHz beep in intervals of .25 seconds on and .25 seconds off, a 1kHz beep in intervals of 1 second on and 1 second off, 16 cycles at 400Hz followed by 18 cycles at 440Hz repeated 12 times followed by one second of silence, a rising whoop or a stepped alarm providing four alarms at 320 Hz in intervals of 28 cycles and 28 cycles off, four alarms at 392 Hz in intervals of 32 cycles on and 32 cycles off, four alarms at 277 Hz intervals of 24 cycles on and 24 cycles off with 1/2 second of silence. It is also possible to have no audible alarm. The nurse call relay K1 has three possible operating modes to accommodate various nurse call systems including continuous closure, one-shot and asynchronous **331**. At the termination of the ALARM mode **301**, the response time is written to the EEPROM **101**, the stored number of alarms is bumped by one

and rewritten to the EEPROM **101** and the current response time is added to the total alarm time and the EEPROM **101** is updated with the new value.

In the alarm mode **301** the system will initialize flash timer **303** and change the annunciator status to turn on alarm and turn off HOLD **305**. The system then inquires as to whether reset is pressed **307** and, if the response to this inquiry is "YES," the system will go to executive **309** and repeat the executive loop **223** illustrated in Figure **11**. If the response to this inquiry is "NO," the system will proceed to inquire as to whether the flash timer has expired **311**. If the response to this inquiry is "YES," the system will toggle the alarm light **313** and reset the timer **315**. If the response to the flash timer expired inquiry **311** is "NO" or the timer is reset **315**, the system will proceed to inquire as to whether there is weight on mat **317**. If the response to this inquiry is "YES," the system will go to monitor **319** and repeat the monitor loop **273** illustrated in Figure **13**. If the response to the weight on mat inquiry **317** is "NO," the system will inquire as to whether the delay timer expired **321**. In this step, the system determines whether the time selected by the caretaker to elapse after weight has left the mat and before weight has returned to the mat has expired. If the response to this delay time expired inquiry **321** is "NO," the system will return to the reset pressed inquiry **307** of the alarm loop **301**. If the response to the delay timer expired inquiry **321** is "YES," the system proceeds to loop A **323** of the alarm mode illustrated in Figure **15** to provide the audio alarm. In this phase of the alarm mode **301**, the system will set the volume **325** and initialize the alarm variables **327** established by the caregiver for the system. The system then dispatches for selected tone **329**, causing the monitor to give the audio tone selected from the six audio tones available to the caregiver. The system will also exercise relay per selected option **331**, causing the nurse call station relay K1 to function according to one of the four alternatives selected by the caregiver for the system. The system will next inquire as to whether the reset is pressed **333**. If the reset button **53** has not been operated by the caregiver, the response to the inquiry is "NO" and the system will return to the dispatch for selected tone **329** step of the alarm loop **301** and continue to provide the selected audio alarm. If the response to the reset press inquiry **333** is "YES," the system will bump event counter, save response time and total response **335** in which the system makes a record of the responses and response times of the caregiver. When this has been completed, the system will go to executive **337** and return to the executive loop **223** illustrated in Figure **11**.

The local configuration or program mode **341** provides the user with a means to select various user options and save these selections in the non-volatile memory **131**. To enter this mode **341**, the delay time is set to nine seconds. The monitor is then powered down. The monitor then is re-powered up with the reset button **53** pressed. The software will then illuminate multiple annunciators to indicate the particular phase of the programming mode **341** which has been entered. There are four phases of the program mode **341** including tone select,

relay action & pull-out detection enable, hold time select and volume adjust. The tone select phase will display the last tone selected in the numeric display **41**. A new tone may be chosen by cycling through the available options with the delay adjust button **55**. Preferably, the default for the first time to apply power is the 1kHz beep at .5 second intervals mentioned above. The relay action phase will display the current relay action in the numeric display **41**. A different action may be chosen by cycling through the available options with the delay adjust button **55**. The default for the first time to apply power is continuous operation. The available relay options are discussed above in relation to the alarm mode **301**. Programming to a three will disable the pull-out detection. This allows the unit to be used in facilities which do not have a nurse call system or choose not to connect to the nurse call system. Programming this to a zero, one, or two enables the pull-out detection. The hold time phase allows the user to adjust the time delay between a patient placing weight on the mat and the beginning of monitoring. The default is preferably 10 seconds. The user may select 1 to 10 seconds. A zero in the numeric display **41** represents 10 seconds. The volume adjust allows the user to select one of ten possible volume levels. The alarm is silent when set to zero and at full volume when set to nine. The software translates 1 through 9 into actual steps (0-31) of the wiper control VW of the programmable volume control **71**. When programmed from the external interface, all 32 steps are available. The default volume is seven (numeric displayed value) which translates to a wiper position of 25. For all of the above, a value is accepted and the next phase is entered by pressing the reset button **53**. After the programming of the volume control **71**, the monitor enters the hold mode **247**. If power is removed during the programming process, the new values up to the last time reset **53** was pressed will be saved.

In the local configuration loop **341**, the system will first turn on hold, monitor and alarm lights, load tone selection and output to numeric display **343**. The system then proceeds to get keys **345** as earlier discussed with respect to other system loops, inquiring as to whether the delay adjust is pressed **347**. If the response to this inquiry is "YES," the system will increment the toning selection **349** and then inquire as to whether the tone is greater than five **351**. This relates to the sequence of six tones earlier referenced in relation to the alarm mode **301**. If the response to this inquiry **351** is "YES," the system will reset the alarm mode to zero **353**. If, after incrementing tone selection **349** the tone is not greater than five **351** or is set to zero **353**, the system returns to the turn-on hold, monitor and alarm lights, load current tone selection and output numeric display step **343**. If the response to the delay adjust pressed inquiry **347** is "NO," the system next inquires as to whether the reset is pressed **355**. If the answer to this inquiry **349** is "NO," the system returns to the get keys step **345**. If the response to this inquiry **349** is "YES," the system will save tone to EEPROM **357**. When the tone has been saved in EEPROM **101**, the system will beep **359** to indicate this status. The system will then turn off alarm light, load current relay action and output to numeric display

361 and again proceed to get keys **363**. The system again inquires as to whether the delay adjust is pressed **365**. If the response to this inquiry **365** is "YES," the system will increment relay action **367** according to the sequence discussed in relation to the alarm mode **301**. The system will inquire as to whether the relay is greater than three **369**, determining which increment of the relay options the system will select. If the response to this inquiry **369** is "YES," indicating that the option will be greater than three, the system sets to zero **371** to begin a recycle of available selections. If the answer to the inquiry **369** is "NO" or if the selection is set to zero **371**, the system returns to the turn off alarm light, load current relay action and output to numeric display step **361**. If the response to the delay adjust pressed inquiry **365** is "NO" the system proceeds to inquire as to whether the reset is pressed **373**. If the answer to this inquiry is "NO," the system returns to the get keys step **363**. If the answer to this inquiry is "YES," the system proceeds to point B **375** of Figures **16** and **17**. Looking at Figure **17**, if the reset pressed inquiry **373** response is "YES," the system will save relay to EEPROM **377**, storing the selected relay position in the EEPROM **101**. The system then proceeds to beep **379** to advise the caregiver of the status. The system then turns on the alarm annunciator, turns off the monitor annunciator, loads the current hold time and outputs to numeric display **381**. The system then again proceeds to get keys 383, first inquiring as to whether the delay adjust is pressed **385**. If the response to this inquiry is "YES," the system will increment hold time **387**. Inquiry is made as to whether the hold is greater than nine **389** and if the response to this inquiry is "YES," the system will set to zero **391**. If the response to the inquiry **389** is "NO," or the system has been set to zero **391**, the system will return to the turn-on alarm enunciator, turn-off monitor enunciator, load current hold time and output numeric display **381**. If the response to the delay adjust pressed inquiry **385** is "NO," the system will then inquire as to whether the reset is pressed **393**. If the response to this inquiry is "NO," the system returns to the delay adjust pressed inquiry **385**. If the response to the inquiry **393** is "YES," the system will save hold time to EEPROM **395**, storing the selected delay time in the EEPROM **101**. The system will then provide a beep **397** to indicate the status and will then turn off the HOLD annunciator, turn on monitor annunciator, load, e.g., 7 as the volume and output to the numeric display **399**. That is, of the ten volume increments selectable, the system will automatically proceed to the seventh increment level. The system then proceeds through point C **401** as illustrated in Figure **18** to get keys **403** and inquire as to whether the delay adjust is pressed **405**. If the response to this inquiry **405** is "YES," the system will increment volume **407** and inquire whether the volume is greater than nine **409**. If the response to this inquiry **409** is "YES," the system will reset volume to zero **411**. If the response to the volume greater than nine **409** is "NO," or the system has set the volume to zero **411**, the system then returns through point D **413** to turn-off HOLD annunciator, turn-on monitor annunciator, load 7 as volume and output to numeric display **399** as shown in Figure

17. Returning to Figure **18**, if the response to the delay adjust pressed inquiry **405** is "NO," the system proceeds to inquire as to whether the reset is pressed **415**. If the response to this inquiry **415** is "NO," the system returns to the get key step **403**. If the response to the inquiry **415** is "YES," the system proceeds to look up actual volume **417**. The system then writes the volume to EEPROM **419**, storing the selected volume in the EEPROM **101**, and then goes to cold **421**, returning to the cold start **201** illustrated in Figure **10**.

The data logger subroutine **431** illustrated in Figure **19** is used by the system at the call data logger steps **239** and **279** of the executive loop **223** illustrated in Figure **11** and the monitor mode **273** illustrated in Figure **13**, respectively. In the data logger sub routine **431**, the system will read hours from RAM **433** and write hours to EEPROM **435**, storing the number of hours that the system has operated in EEPROM **101**. The system will then read minutes from RAM **437** and write minutes to EEPROM **439** to store any portion of an hour not already stored in EEPROM **101**. The system will then reset 0.1 hour timer **441** and return **443** to the routine making the data logger demand.

The pull-out protection sub routine **451** illustrated in Figure **20** is used by the system at the call pull-out steps **269** and **291** of the hold delay mode **247** illustrated in Figure **12** and the monitor mode **273** illustrated in Figure **13**, respectively. In the pull-out protection subroutine **451**, the system will read the output Q_6 of the latch and read the status of Bit 2 of Port B **455**. The system will then inquire as to whether PB2 is high **457**. If the response to this inquiry is "NO," the system will sound alarm **459** and return **461** to the pull-out protection step **451**. If the response to this inquiry is "YES," the system will proceed to return **461** to the routine making the pullout protection demand without sounding the alarm.

In summary, the monitor will preferably conform to the following specifications:

Specification	Min:	Max:	Units	Tolerance
Delay Time	1	10	seconds	+/-5%
Hold Time	1	10	seconds	+/-5%
Relay One-shot Duration	0.5	5	seconds	n/a
Relay Asynchronous On	0.25	2	seconds	n/a
Relay Asynchronous Off	0.25	2	seconds	n/a
Tone Programming	0	7	n/a	n/a
Relay Programming	0	2	n/a	n/a
Pull-out Programming	0	1	n/a	n/a

Specification	Min:	Max:	Units	Tolerance
Hold Time Programming	0	9	n/a	n/a
Warning Frequencies	n/a	n/a	Hertz	+/-10%
Tone Durations	n/a	n/a	seconds	+/-10%

Microprocessor-Based Monitor with a Modifiable Personality

According to a second aspect of the instant invention, there is provided a microprocessor based monitor substantially as described above, but wherein the software that controls the actions of the monitor is stored within modifiable nonvolatile memory (e.g., flash-RAM) within the device, so as to be modifiable to create a patient monitor that has different personalities, depending on the needs of a particular application. More specifically, it is contemplated that much, if not all, of the software illustrated in Figures **10** to **20** — the software that controls the personality / functionality of the unit — will be stored within the monitor in a form that can be modified to suit the requirements of any site or individual patient (per doctor's orders) and, more particularly, the needs of the particular nurse call station to which the monitor is connected.

Turning first to Figure **21** wherein the general environment of the instant invention is broadly illustrated, in the preferred embodiment the reprogrammable monitor **550** is connected to sensor mat **500** by way of an RJ-11 connector **525**. As has been discussed previously, the RJ-11 connector **525** provides the internal microprocessor **10** access to the state of the patient detector circuit within the mat **500**. During normal operations, power line **565** would be plugged into monitor **550** to provide a source of external power to the unit. However, Figure **21** illustrates the preferred configuration of the monitor **500** and a interconnected computer host **570** during exchange of information. Interface unit **560** is designed to act as a data conduit and pass serial information along line **580** from the host computer **570** to the monitor **550** and back again on demand from the host **570** or monitor **550**. Additionally, the instant interconnection incorporates a power line into the serial line **590** for use by the monitor **550** during programming. It is not essential that the power be incorporated into the interconnecting line **590**, but it is part of the presently preferred embodiment that it be so designed. In the event that a source of power is not needed via line **590**, that line could take the form of a simple parallel serial, USB, etc. cable and interface unit **560** could then be a standard computer port (serial, parallel, etc.). Additionally, it should be noted that, although the interface unit **560** is pictured as being a separate device that is external to both the monitor **550** and the host **570**, it might easily be incorporated into one unit, or the other, or both.

In the preferred embodiment, the lines **580** and **590** that interconnect the host computer **570** and electronic monitor **550** are serial lines, and the data communications protocol used is

the I^2C standard. However, those skilled in the art will recognize that there are many other standard and non-standard communications protocols that could be used in the alternative. For example, the instant inventors specifically contemplate that the interconnecting communications lines (**580** and **590**) could be parallel cables. Further, it might prove to be desirable in some cases to put a separate data port on the monitor **550** which might be, for example, a serial or parallel connector and which is dedicated for use in communications with a host computer **570**, i.e., it does not share the responsibility of conveying power to the unit during data transfer. Finally, it specifically contemplated by the inventors that it would even be possible to communicate with a remotely positioned monitor **550** through nurse call interface **130** (Figure **1**), thereby eliminating the need to physically bring together the host computer **570** and monitor **550**, it being well within the capability of one of ordinary skill in the art to modify the invention-as-disclosed to implement this variation.

Within the monitor **550** and as is illustrated in Figure **22**, data sent from the host computer **570** are received by the CPU **620** of the microprocessor **10** and then subsequently stored, preferably within a local flash RAM **610**. As is well known to those skilled in the art, many other similar arrangements might be used instead that would be functionally equivalent to using flash RAM, including using conventional RAM with battery backup, EEPROM, a local disk drive, etc, the key feature being that — what ever type of storage is used — it should be at least relatively nonvolatile for purposes of the instant embodiment and, most importantly, modifiable under local program control. Thus, in the text that follows the phase "modifiable nonvolatile RAM" will be used in the broadest sense to refer to the type of storage just described. Additionally, it is anticipated that CPU **620** will be provided with some amount of ROM **130** or other storage type for permanently storing information and which could contain, for example, the serial number of the unit, date of manufacture, and the code that would control the basic operations of the CPU **10** during cold starts, resets, personality uploads, etc.

During operation, the monitor **550** could use the flash RAM **620** as storage for various data parameter values including accumulated performance statistics, data / time stamps of alarm events, patient identification numbers, hold delay, delay time, speaker volume, type of alarm tone (i.e., what sort of alarm will be sounded — e.g., fast beep, slow beep, whoop, etc.), relay action type (e.g., continuous, one-shot, asynchronous, etc.), total time in service, date of last bio-med check,total number of alarms sounded, response time to last alarm, average response to last four alarms, alarm history (e.g., response times for the last fifteen or so alarms and time / date of alarm occurrence), repair history, hospital equipment identification number (e.g., asset number), or a current time / date stamp. Additionally, this same connection could be used to read parameters from the monitor **550** such as total time in service, date of last bio-medical check, the unit serial number, etc.

However, the main anticipated use for the flash RAM **620** is for storage of the operating personality of the unit. In particular, Figures **10** to **20** discussed previously are implemented within the monitor in the form of assembly language computer instructions which are stored in and read from ROM memory **130**, thereby making those program steps immutable, unless the memory chip containing them is replaced. In the instant embodiment, it is anticipated that much of the functionality of the software illustrated in those figures would be stored in a form that can be modified to suit the requirements of a particular nurse call station, or hospital environment, e.g., within flash RAM **620**.

As is broadly illustrated in Figure **23**, the personality loading program **700** within the monitor **550** is preferably initiated through the use of a non-maskable interrupt **705** (defined as a "master mode" interrupt) as is provided for by the I^2C communications standards. In more particular, when the CPU **610** senses an interrupt on the pins associated with port **593**, it preferably enters a slave mode, wherein the host computer **570** completely controls its operations. The host computer **570** then directs the monitor CPU **610** to begin receiving "data" **715** and storing that data **725** at predetermined locations within the flash RAM **620**, which data may be parameter values as discussed previously or, preferably, binary computer instructions that define the personality / operations of the unit.

At the conclusion of the loading process, the host computer will preferably require the monitor to execute a cold start **735**, after which the monitor will continue execution as before, only this time using the various aspects of the new personality stored **740** in flash-RAM. Of course, the obvious advantage of an arrangement such as this is that it permits the functionality of the monitor to be modified to suit specific applications and, indeed, makes it possible for a single monitor to function with multiple nurse call station formats with only minimal effort.

System for Programming a Reprogrammable Monitor

According to still a further aspect of the instant invention, there is provided a monitor / host software combination that allows the end-user to make personality changes in the software that controls the monitor. Additionally, this same system provides a means for the user to read and / or modify data values that are maintained in the nonvolatile memory of the patient monitor. In the preferred embodiment, the software that manages the user interface would run on a host computer **570** such as a lap top computer. As is well known to those skilled in the art, the software embodying the instant invention might be conveyed into the computer that is to execute it by way of any number of devices **571** including, for example, a floppy disk, a magnetic disk, a magnetic tape, a magneto-optical disk, an optical disk, a CD-ROM, flash RAM, a ROM card, a DVD disk, or loaded over a network.

As is broadly illustrated in Figures **21** through **23** and as has been discussed previously, a preferred embodiment of the instant invention uses a host computer **570** to load

operating parameters and executable instructions into the monitor. Additionally, this same connection is used to retrieve statistical and other information from the monitor. Further, cumulative statistical values such as total time spent in an alarm condition, alarm history, etc., can be reset (e.g., made equal to zero) by this same process.

As is illustrated in Figure **24**, the host control program for parameter and operating statistics recall **800** preferably begins by generating a non-maskable interrupt **805** which results in monitor **550** passing operating control to the host computer **570**. The host computer **570** then instructs the monitor CPU **610** to pass the contents of specific memory locations (steps **815** to **830**) back to itself. The data returned from the monitor **550** are then presented to the user for review. Needless to say, once the data have been collected additional analysis of the resulting information would certainly be useful in some situations and that additional step has been specifically contemplated by the instant inventors.

Conclusions

Although the preceding text has occasionally referred to the electronic monitor of the instant invention as a "bed" monitor, that was for purposes of specificity only and not out of any intention to limit the instant invention to that one application. In fact, the potential range of uses of this invention is much broader than bed-monitoring alone and might include, for example, use with a chair monitor, a toilet monitor, or other patient monitor, each of which is configurable as a binary switch, a binary switch being one that is capable of sensing at least two conditions and responding to same via distinct electronic signals. In the preferred embodiment, those two conditions would be the presence of patient and the absence of a patient from a monitored area. Although a pressure sensitive switch is the binary switch of choice for use in the preferred embodiment, other types of switches could work as well for some applications. Additionally, it should be noted that the use of the term "binary" is not intended to limit the instant invention to use only with sensors that can send only two signal types. Instead, binary switch will be used herein in its broadest sense to refer to any sort sensor that can be utilized to discern whether a patient is present or not, even if that sensor can generate a multitude of different of signals.

Thus, it is apparent that there has been provided, in accordance with the invention, a monitor and method of operation of the monitor that fully satisfies the objects, aims and advantages set forth above. While the invention has been described in conjunction with specific embodiments thereof, it is evident that many alternatives, modifications and variations will be apparent to those skilled in the art and in light of the foregoing description. Accordingly, it is intended to embrace all such alternatives, modifications and variations as fall within the spirit of the appended claims.

THE CLAIMS

WHAT IS CLAIMED IS:

1. A bed patient monitor comprising:

(a) a loudspeaker, said loudspeaker being driven by a power amplifier and said amplifier responding to an input signal derived from a programmable volume control to produce an aural alarm; and

(b) a processor

(1) for receiving electronic signals from a sensor indicative of the presence thereon and absence therefrom of a patient,

(2) for synthesizing at least one alarm sound under software control,

(3) for operating said programmable volume control to select a decibel level of said at least one alarm sound, and

(4) for activating and deactivating said alarm in response to said electronic signals.

2. A monitor according to Claim **1** further comprising

(c) electrically erasable programmable read only memory for storing a plurality of alarm sounds for selection by said processor of said at least one alarm sound.

3. A monitor according to Claim **1** further comprising

(c) electrically erasable programmable read only memory for storing a plurality of decibel levels for selection by said processor of said decibel level of said at least one alarm sound.

4. A monitor according to Claim **1** further comprising

(c) electrically erasable programmable read only memory for storing a plurality of options for a delay time between an initiation of absence of a patient from the sensor and an activation of said alarm by said processor.

5. A monitor according to Claim **4** further comprising

(d) an external switch connected to said processor for selecting said delay time from said plurality of options.

6. A monitor according to Claim **1** further comprising

(c) electrically erasable programmable read only memory for logging usage data including total hours of use of the monitor, total time of alarm sounding by the monitor, total number of alarms sounded by the monitor and a response time

between a most recent sounding of an alarm and a subsequent operation of the monitor.

7. A monitor according to Claim **6** having a port for downloading said logged usage data to a host computer.

8. A monitor according to Claim **1** further comprising

(c) a nurse call interface having a relay which is energized when said power amplifier is deenergized and having a normally open contact, a normally closed contact and a common contact for interconnecting the monitor to a nurse call system through one of said normally open and normally closed contacts.

9. A reprogrammable patient monitor for use with a binary switch, said binary switch detecting at least two states,

a first state corresponding to a presence of a patient on said binary switch, and,

a second state corresponding to an absence of said patient from said binary switch,

comprising:

(a) a microprocessor, said microprocessor

(a1) being positionable so as to be in electronic communication with said binary switch, and

(a2) responding to said binary switch when placed into electronic communication therewith;

(b) modifiable nonvolatile RAM accessible by said microprocessor,

(b1) said modifiable nonvolatile RAM containing at least a plurality of modifiable computer instructions utilizable by said microprocessor, and,

(b2) said modifiable computer instructions defining at least a portion of said response of said microprocessor to said binary switch; and,

(c) a loudspeaker in electronic communication with said microprocessor and responsive thereto, said loudspeaker sounding an alarm at least when said microprocessor senses said second state of said binary switch.

10. A reprogrammable patient monitor according to Claim **9**, further comprising:

(d) a port for downloading information from and uploading information to a host computer, said microprocessor being in electronic communication with said port.

11. A device according to Claim **9**, wherein said modifiable nonvolatile RAM further contains at least one data item.

12. A device according to Claim **11**, wherein said at least one data item is selected from the group consisting of a patient identification number, an alarm tone option, a relay action option, a hold delay, a delay time, a speaker volume, a total time in service, a date of last bio-med check, a total number of alarms sounded, a response time to a last alarm, an average response to a last four alarms, an alarm history, a repair history, and an hospital inventory number.

13. A reprogrammable patient monitor according to Claim **9** wherein said binary switch is selected from the group consisting of a bed patient monitor, a chair patient monitor, and a toilet seat patient monitor.

14. An apparatus for altering a personality of a reprogrammable patient monitor, wherein is provided the device of Claim **1**, further comprising:

(d) a host computer, said host computer containing a plurality of data values for use by said reprogrammable patient monitor; and,

(e) an interface unit, said interface unit

(e1) being in electronic communication with said host computer and with said reprogrammable patient monitor, and

(e2) passing at least one of said plurality of data values between said host computer and said reprogrammable patient monitor upon demand.

15. A reprogrammable patient monitor according to Claim **9**, wherein

said loudspeaker is driven by a power amplifier,

said amplifier responding to an input signal derived from a programmable volume control to produce an aural alarm, and,

wherein said microprocessor operates said programmable volume control to produce a synthesized alarm under software control.

16. A method of altering a personality of a reprogrammable patient monitor, said reprogrammable patient monitor containing computer instructions and data in modifiable nonvolatile RAM, comprising the steps of:

(a) establishing a communications link between a host computer and said reprogrammable patient monitor;

(b) transmitting at least one byte of information from said host to said reprogrammable patient monitor;

(c) storing said at least one byte of information within said modifiable nonvolatile RAM, thereby creating a modified personality of said reprogrammable patient monitor; and,

(d) using said reprogrammable patient monitor to monitor a changeable status of a binary switch, said reprogrammable patient monitor responding to a change in said changeable status of said binary switch according to said modified personality.

17. A device adapted for use by a digital computer wherein a plurality of computer instructions defining at least steps (a) and (b) of the method of Claim **16** are encoded, said device being readable by said host computer, said computer instructions programming said host computer to perform said method, and, said device being selected from the group consisting of a floppy disk, a magnetic disk, a magnetic tape, a magneto-optical disk, an optical disk, a CD-ROM, flash RAM, a ROM card, or a DVD disk.

18. A method of altering a personality of a reprogrammable patient monitor according to Claim **16**, wherein step (b) includes the steps of:

(b1) obtaining from a user at least one parameter value, said at least one parameter value consisting of at least one byte of information, and,

(b2) transmitting said at least one byte of information from said host computer to said reprogrammable patient monitor.

19. A method of altering a personality of a reprogrammable patient monitor according to Claim **18**, wherein said parameter value of step (b1) is selected from the group consisting of a patient identification number, an alarm tone option, a relay action, a hold delay, a delay time, and a loudspeaker volume.

20. A method of altering a personality of a reprogrammable patient monitor according to Claim **16**, wherein said at least one byte of information of step (b) is a binary computer instruction.

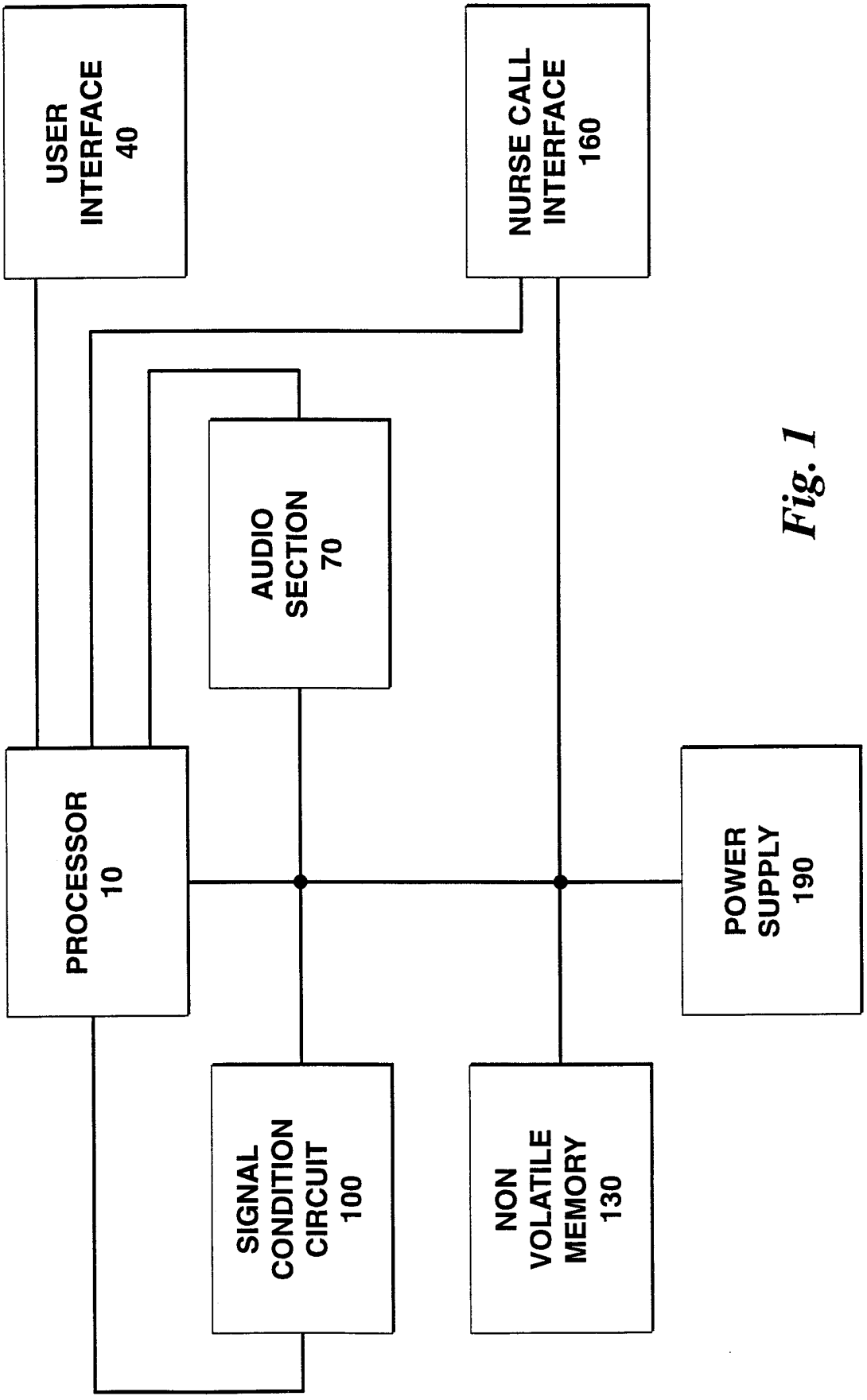
USER INTERFACE 40
NURSE CALL INTERFACE 160
AUDIO SECTION 70
PROCESSOR 10
POWER SUPPLY 190
SIGNAL CONDITION CIRCUIT 100
NON VOLATILE MEMORY 130

Fig. 1

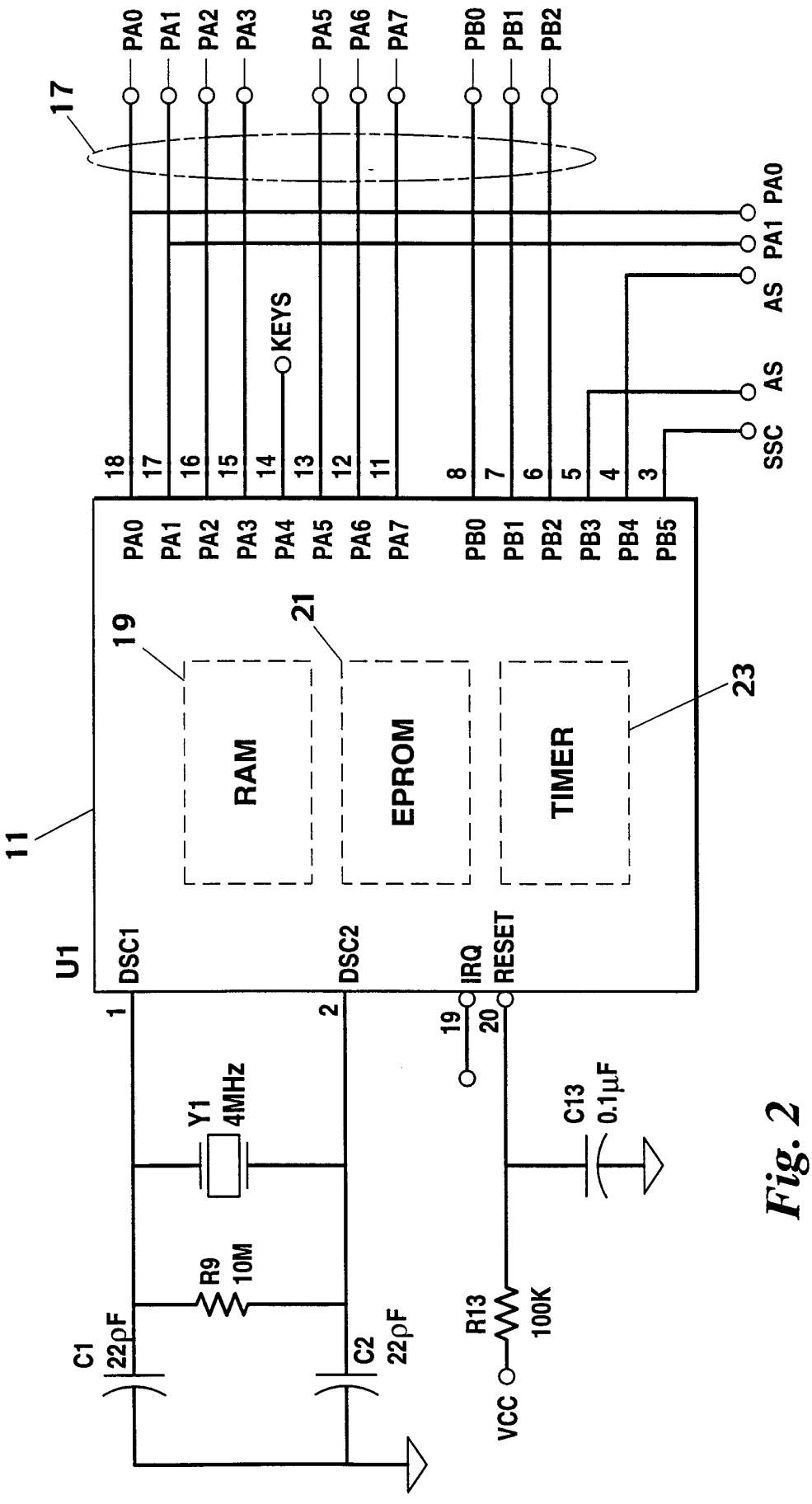
17
PA0
PA1
PA2
PA3
PA5
PA6
PA7
PB0
PB1
PB2
KEYS
PA0
PA1
AS
AS
SSC
18
17
16
15
14
13
12
11
8
7
6
5
4
3
PA0
PA1
PA2
PA3
PA4
PA5
PA6
PA7
PB0
PB1
PB2
PB3
PB4
PB5
19
21
23
RAM
EPROM
TIMER
11
U1
DSC1
DSC2
IRQ
RESET
1
2
19
20
Y1
4MHz
C13
0.1µF
R9
10M
C1
22pF
C2
22pF
R13
100K
VCC

Fig. 2

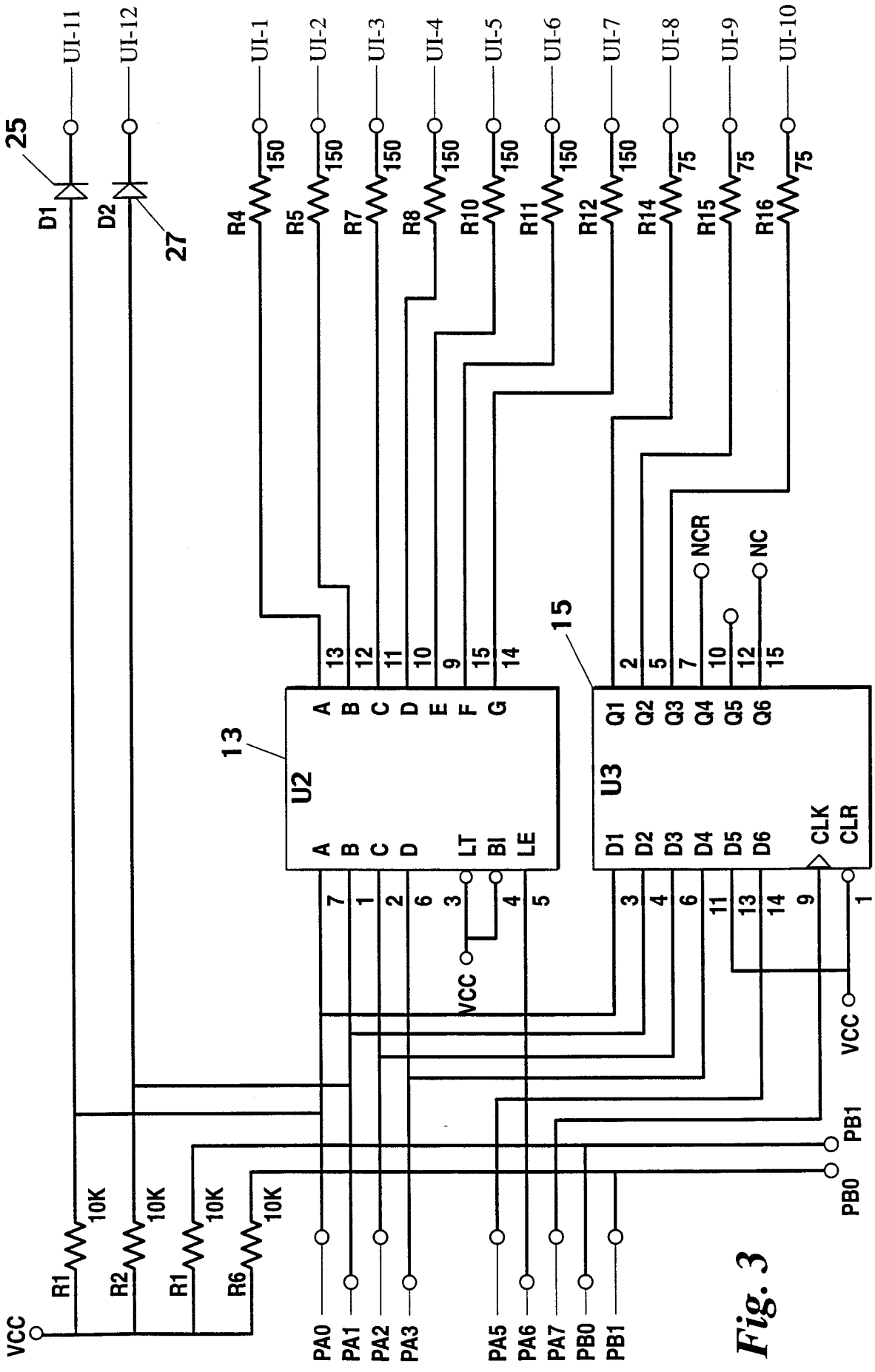
25
D1
D2
27
UI-11
UI-12
UI-1
UI-2
UI-3
UI-4
UI-5
UI-6
UI-7
UI-8
UI-9
UI-10
R4 150
R5 150
R7 150
R8 150
R10 150
R11 150
R12 150
R14 75
R15 75
R16 75
13
U2
A B C D E F G
13 12 11 10 9 15 14
A B C D LT BI LE
7 1 2 6 3 4 5
15
U3
Q1 Q2 Q3 Q4 Q5 Q6
2 5 7 10 12 15
NCR
NC
D1 D2 D3 D4 D5 D6 CLK CLR
3 4 6 11 13 14 9 1
VCC
VCC
PB1
PB0
R1 10K
R2 10K
R1 10K
R6 10K
VCC
PA0 PA1 PA2 PA3 PA5 PA6 PA7 PB0 PB1

Fig. 3

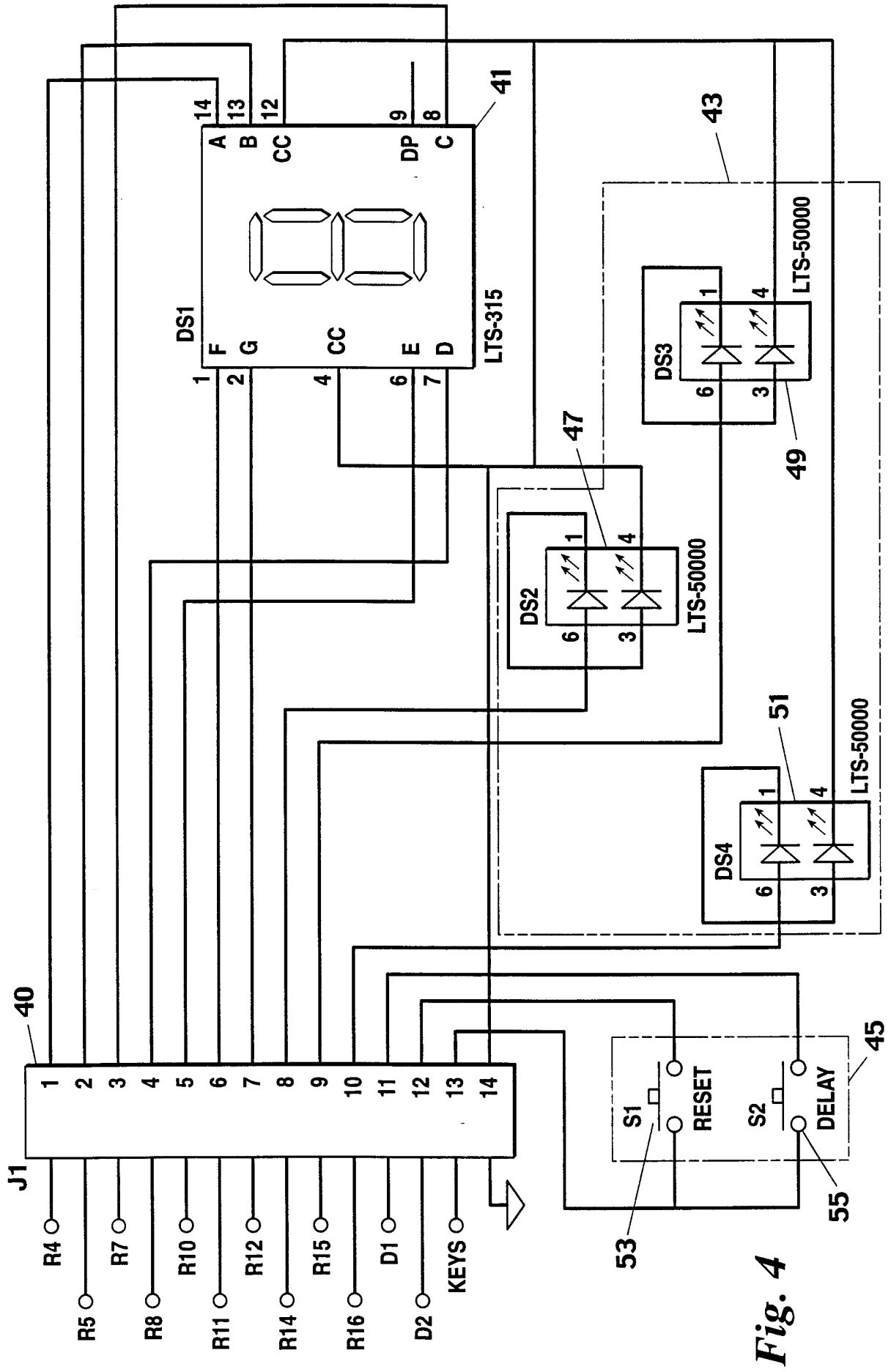
41
43
DS1
LTS-315
A
B
CC
DP
C
F
G
CC
E
D
DS3
LTS-50000
49
47
DS2
LTS-50000
51
DS4
LTS-50000
40
J1
45
S1
RESET
S2
DELAY
53
55
R4
R5
R7
R8
R10
R11
R12
R14
R15
R16
D1
D2
KEYS

Fig. 4

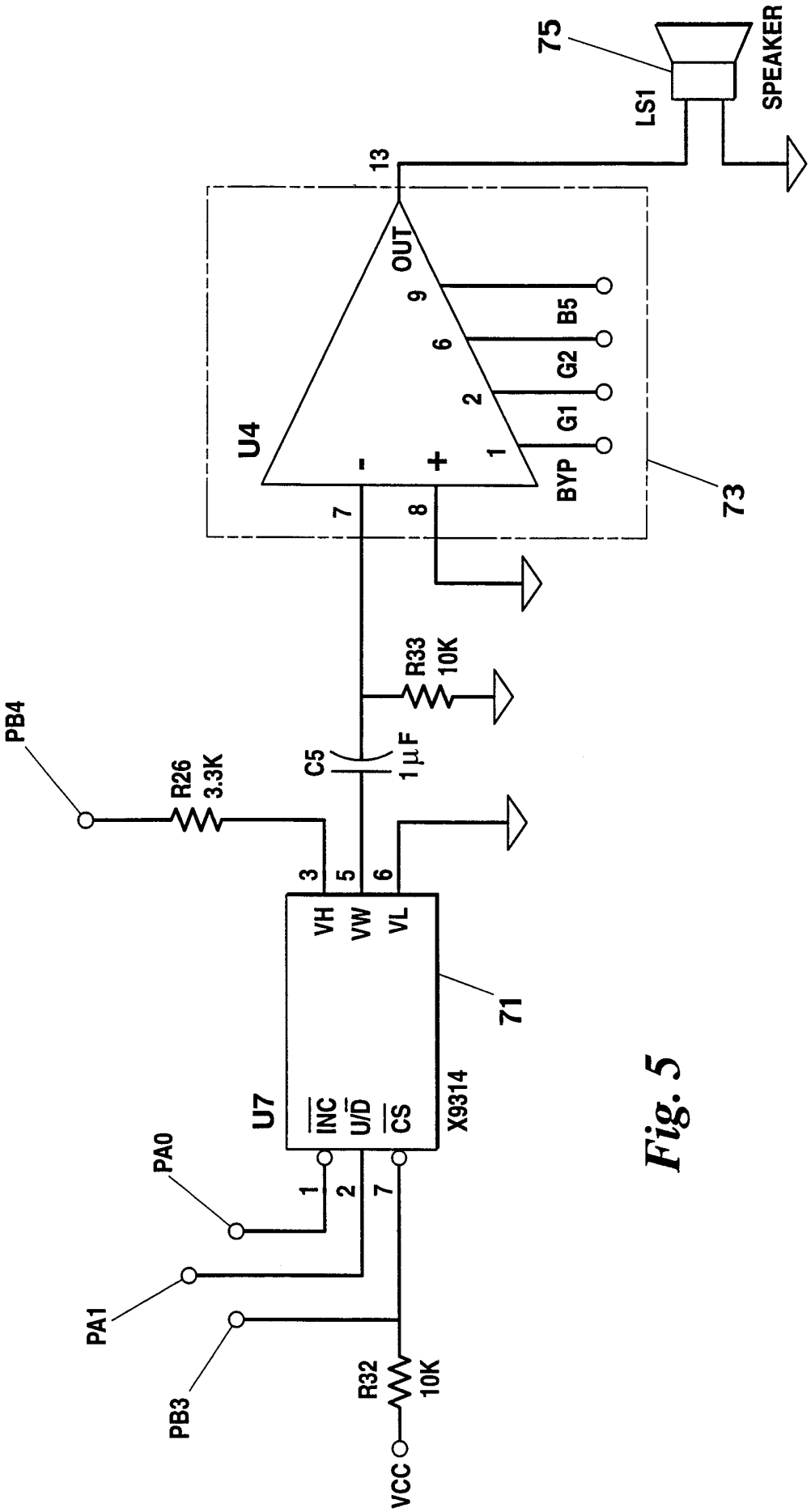
75
SPEAKER
LS1
13
OUT
9
6
2
1
B5
G2
G1
BYP
U4
-
+
7
8
73
R33
10K
PB4
R26
3.3K
C5
1µF
3
5
6
VH
VW
VL
71
U7
INC
U/D
CS
X9314
PA0
PA1
PB3
1
2
7
R32
10K
VCC

Fig. 5

Fig. 6

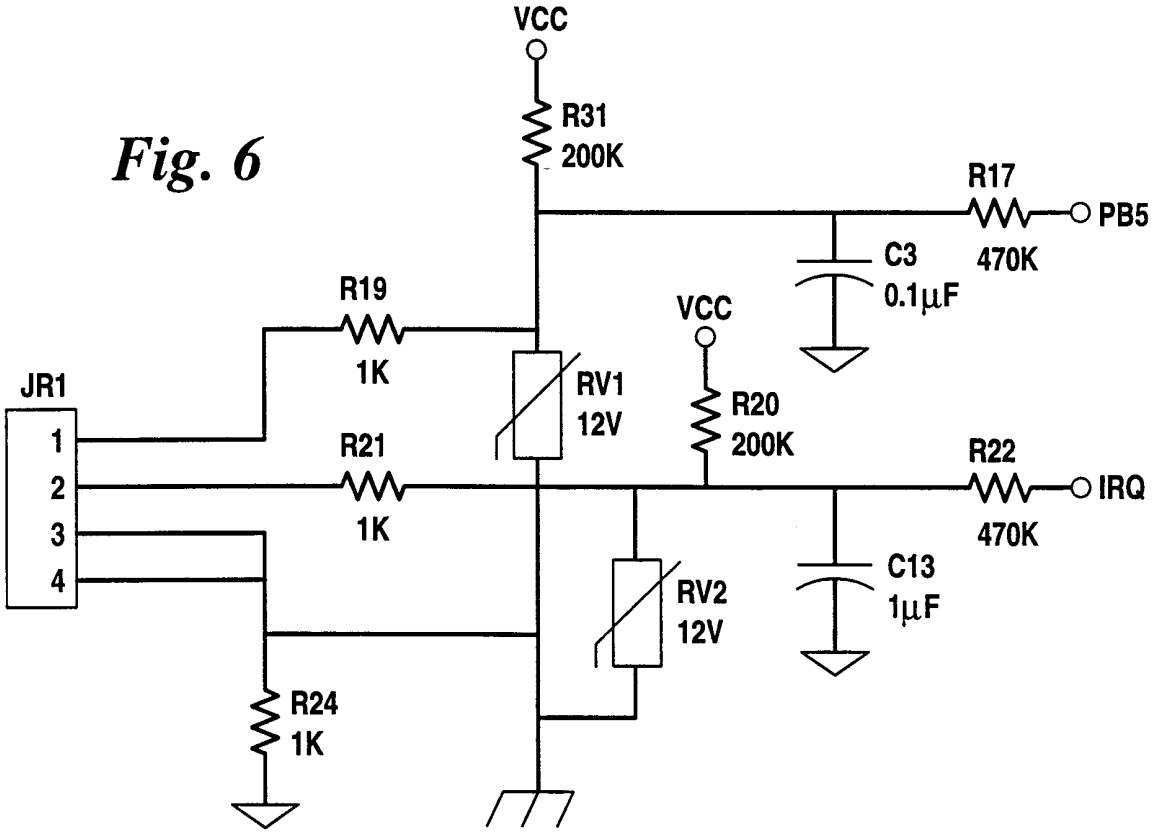
VCC
R31
200K
R17
PB5
470K
C3
0.1µF
R19
1K
VCC
JR1
RV1
12V
R20
200K
1
2
3
4
R21
1K
R22
IRQ
470K
C13
1µF
RV2
12V
R24
1K

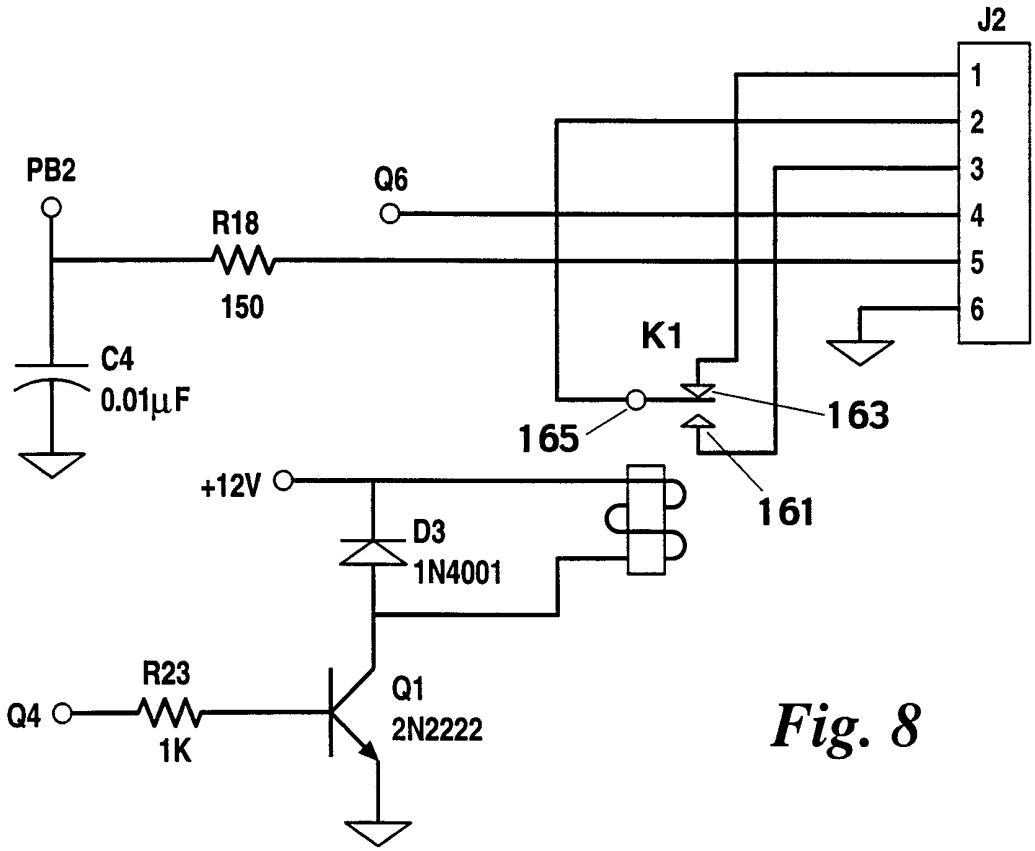
J2
1
2
3
4
5
6
PB2
Q6
R18
150
K1
C4
0.01µF
165
163
161
+12V
D3
1N4001
R23
Q1
2N2222
Q4
1K

Fig. 8

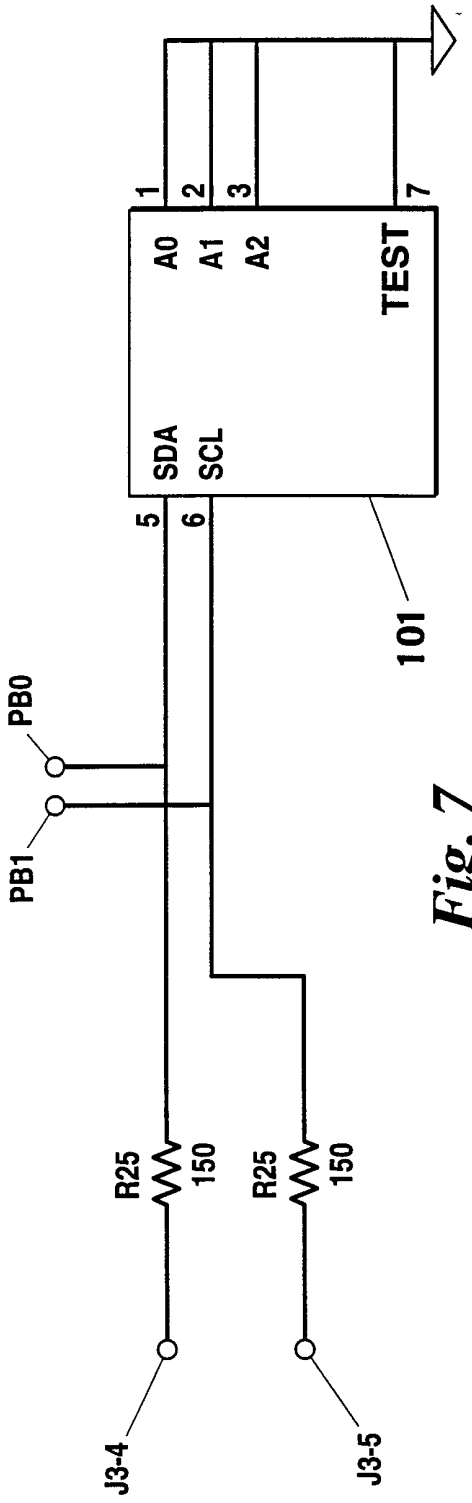
A0
A1
A2
TEST
SDA
SCL
1
2
3
7
5
6
101
PB0
PB1
R25
150
R25
150
J3-4
J3-5

Fig. 7

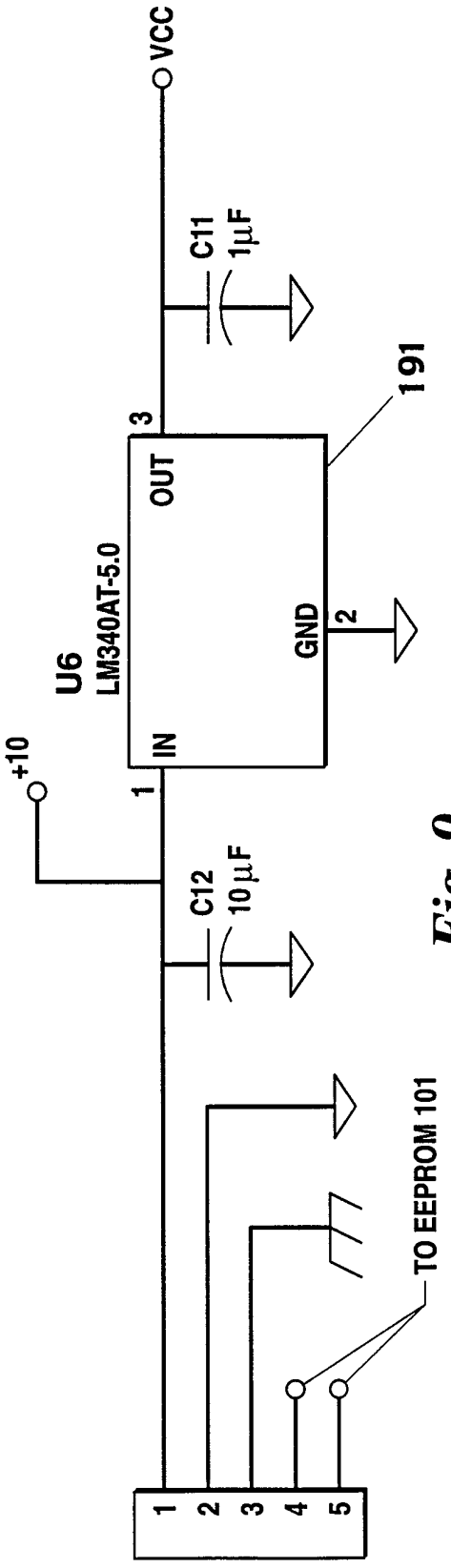
VCC
C11
1µF
191
3
OUT
U6
LM340AT-5.0
GND
2
IN
1
+10
C12
10µF
TO EEPROM 101
1
2
3
4
5

Fig. 9

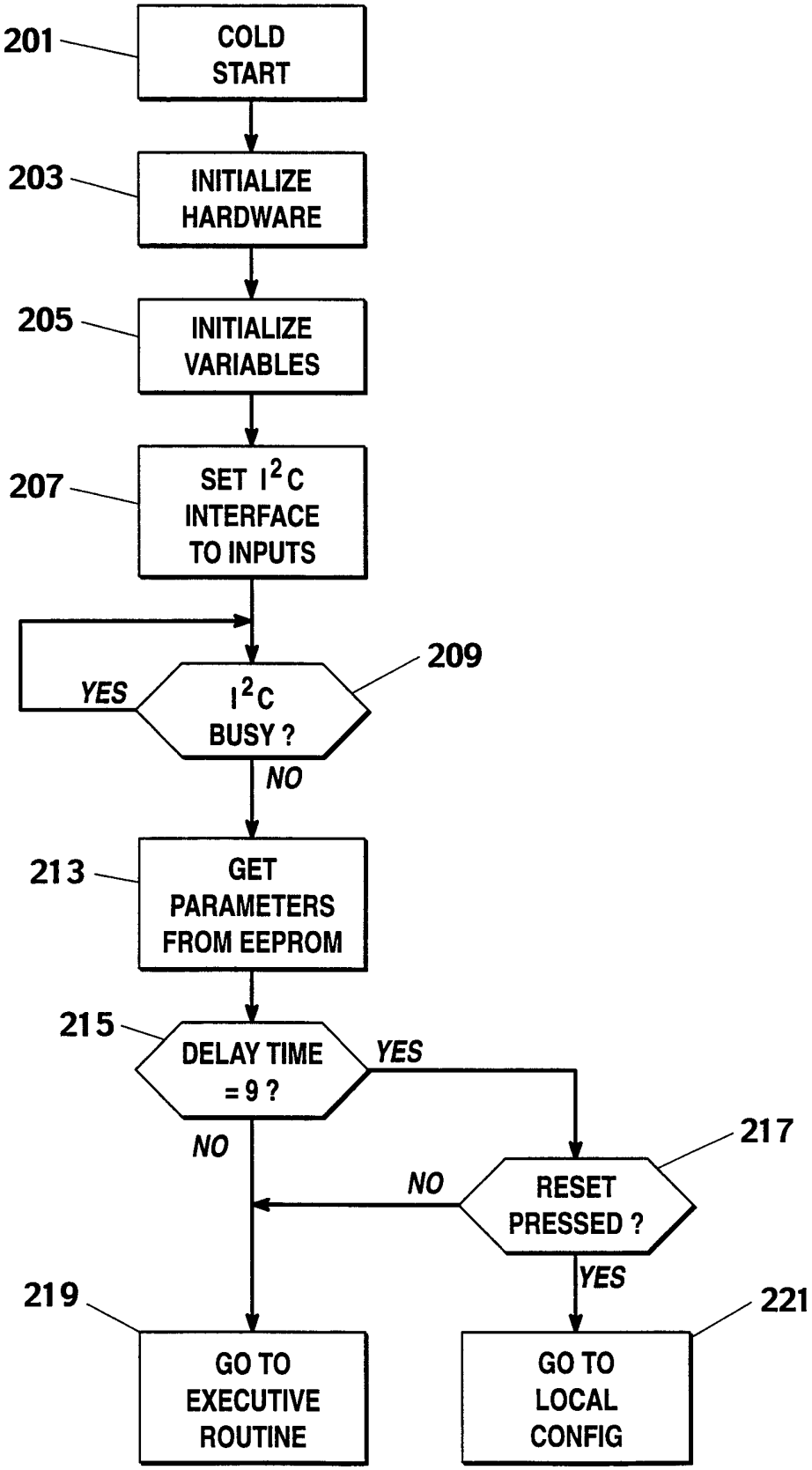
201
COLD START
203
INITIALIZE HARDWARE
205
INITIALIZE VARIABLES
207
SET I2C INTERFACE TO INPUTS
209
YES
I2C BUSY ?
NO
213
GET PARAMETERS FROM EEPROM
215
DELAY TIME = 9 ?
YES
NO
217
NO
RESET PRESSED ?
YES
219
GO TO EXECUTIVE ROUTINE
221
GO TO LOCAL CONFIG

Fig. 10

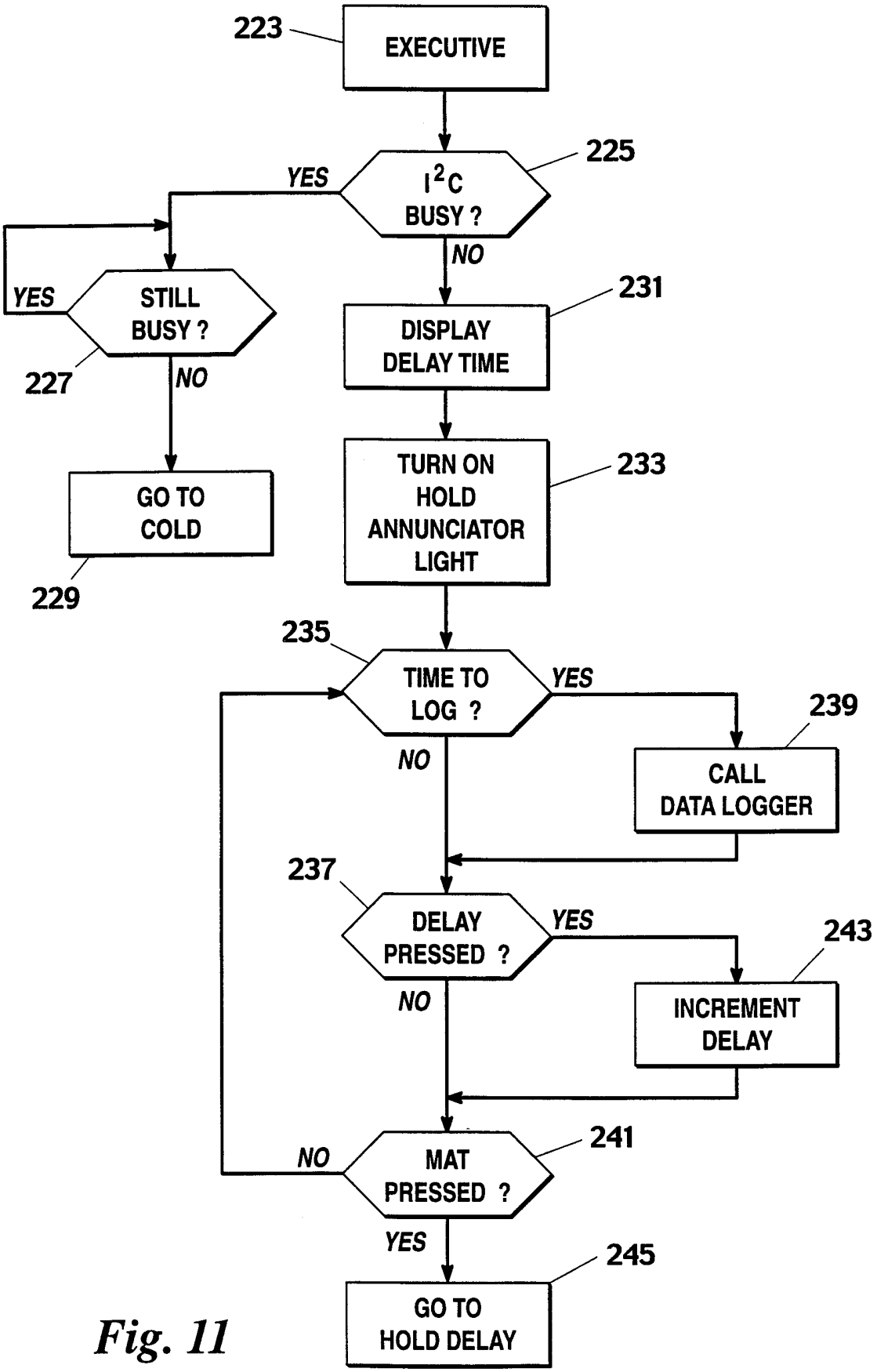
223
EXECUTIVE
225
YES
I²C BUSY ?
NO
YES
STILL BUSY ?
227
NO
231
DISPLAY DELAY TIME
GO TO COLD
229
TURN ON HOLD ANNUNCIATOR LIGHT
233
235
TIME TO LOG ?
YES
239
NO
CALL DATA LOGGER
237
DELAY PRESSED ?
YES
243
NO
INCREMENT DELAY
NO
MAT PRESSED ?
241
YES
245
GO TO HOLD DELAY

Fig. 11

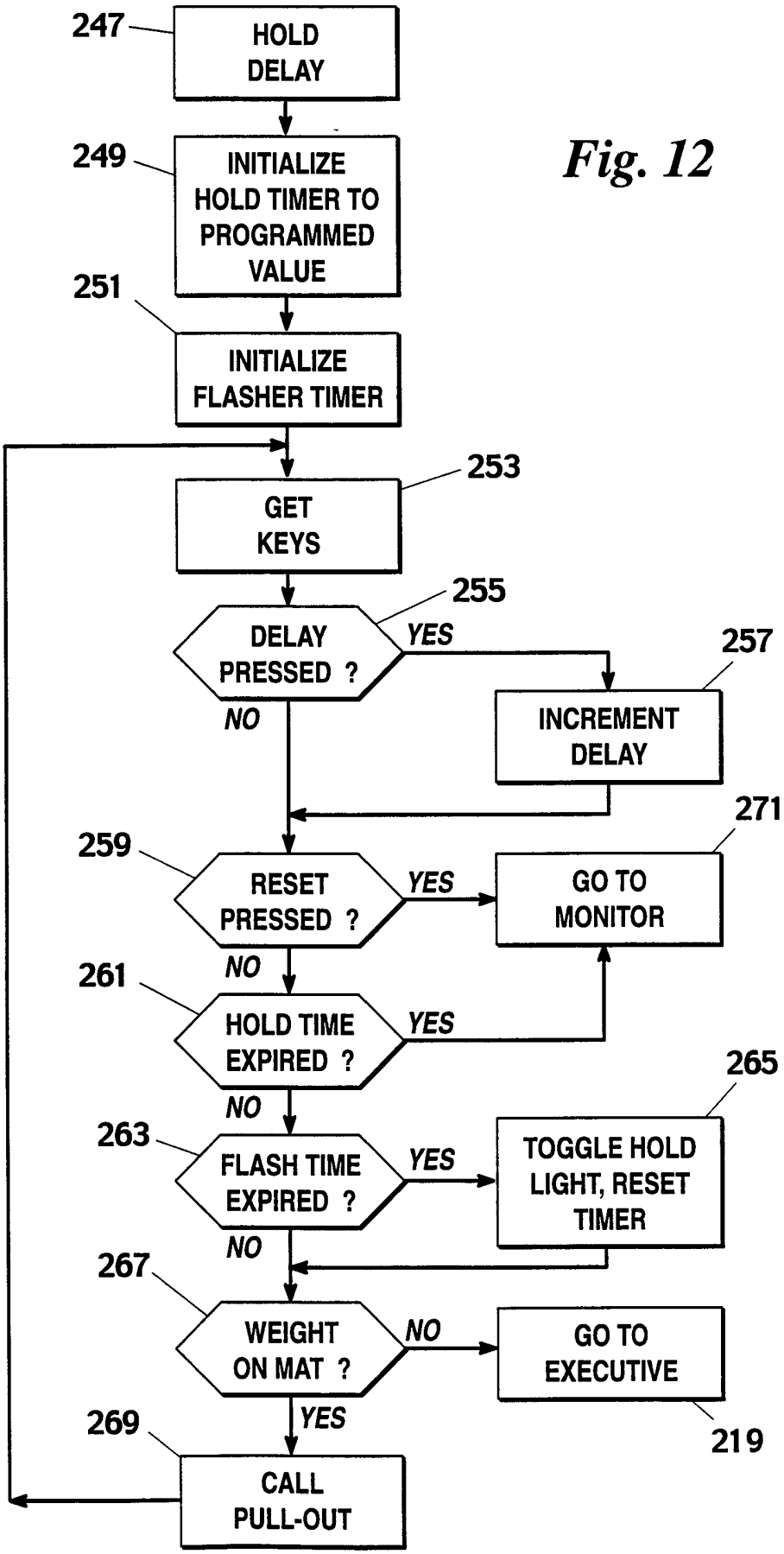
247
HOLD DELAY
249
INITIALIZE HOLD TIMER TO PROGRAMMED VALUE
251
INITIALIZE FLASHER TIMER
253
GET KEYS
255
DELAY PRESSED ?
YES
NO
257
INCREMENT DELAY
259
RESET PRESSED ?
YES
271
GO TO MONITOR
NO
261
HOLD TIME EXPIRED ?
YES
NO
265
263
FLASH TIME EXPIRED ?
YES
TOGGLE HOLD LIGHT, RESET TIMER
NO
267
WEIGHT ON MAT ?
NO
GO TO EXECUTIVE
219
YES
269
CALL PULL-OUT

Fig. 12

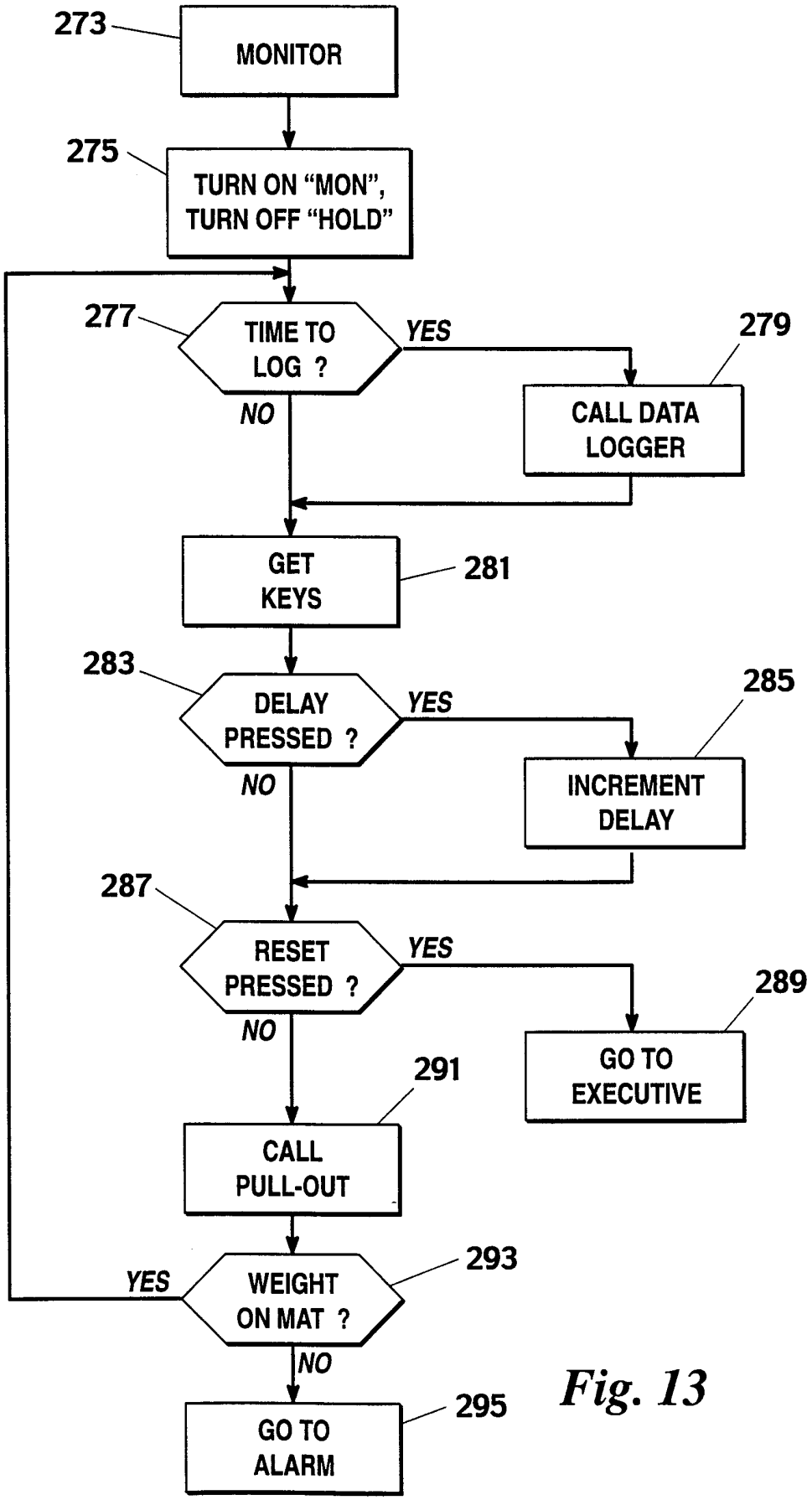
273
MONITOR
275
TURN ON "MON", TURN OFF "HOLD"
277
TIME TO LOG ?
YES
NO
279
CALL DATA LOGGER
GET KEYS
281
283
DELAY PRESSED ?
YES
NO
285
INCREMENT DELAY
287
RESET PRESSED ?
YES
NO
289
GO TO EXECUTIVE
291
CALL PULL-OUT
293
WEIGHT ON MAT ?
YES
NO
295
GO TO ALARM

Fig. 13

Fig. 14

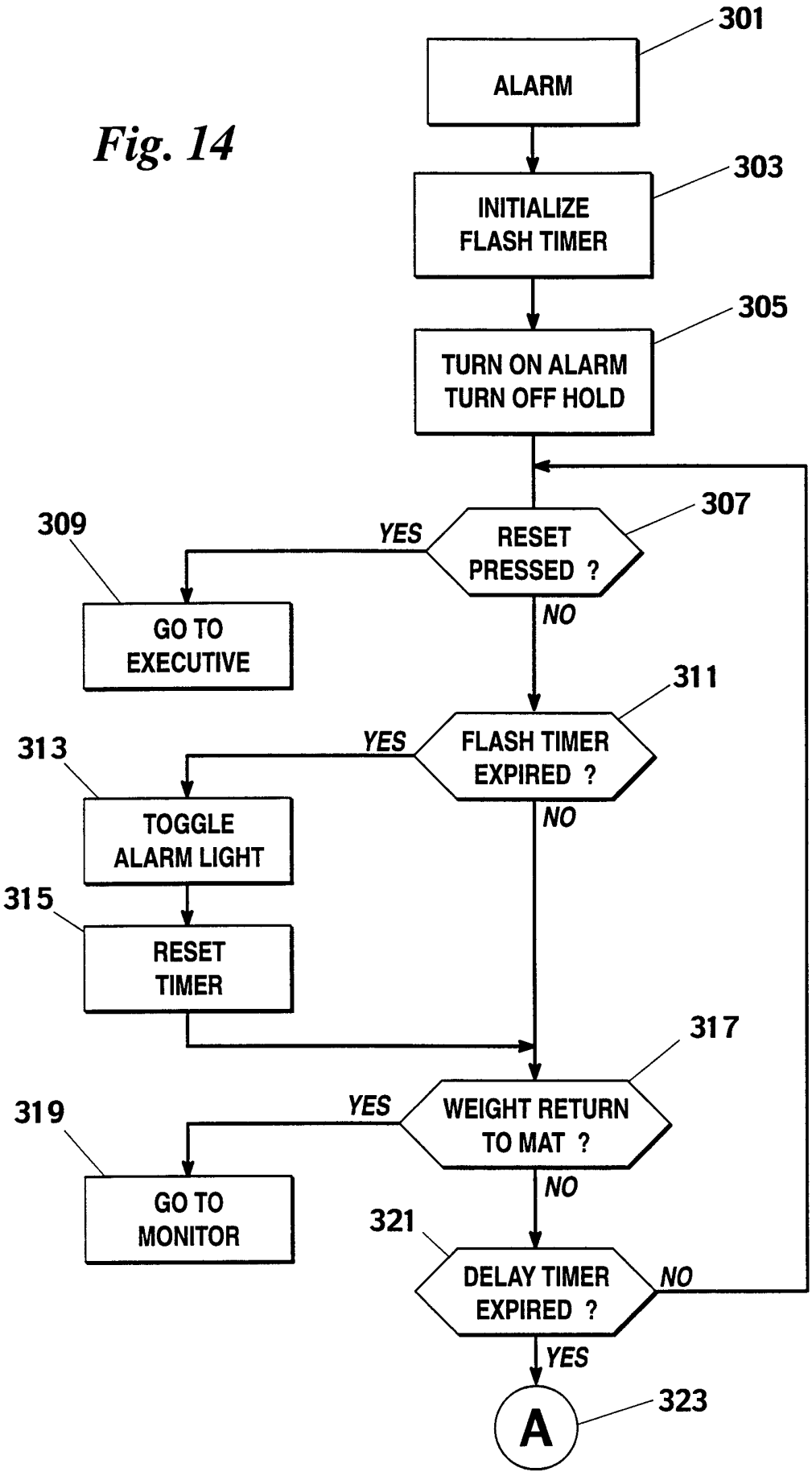
301
ALARM
303
INITIALIZE FLASH TIMER
305
TURN ON ALARM TURN OFF HOLD
307
RESET PRESSED ?
YES
309
GO TO EXECUTIVE
NO
311
FLASH TIMER EXPIRED ?
YES
313
TOGGLE ALARM LIGHT
NO
315
RESET TIMER
317
WEIGHT RETURN TO MAT ?
YES
319
GO TO MONITOR
NO
321
DELAY TIMER EXPIRED ?
NO
YES
A
323

Fig. 15

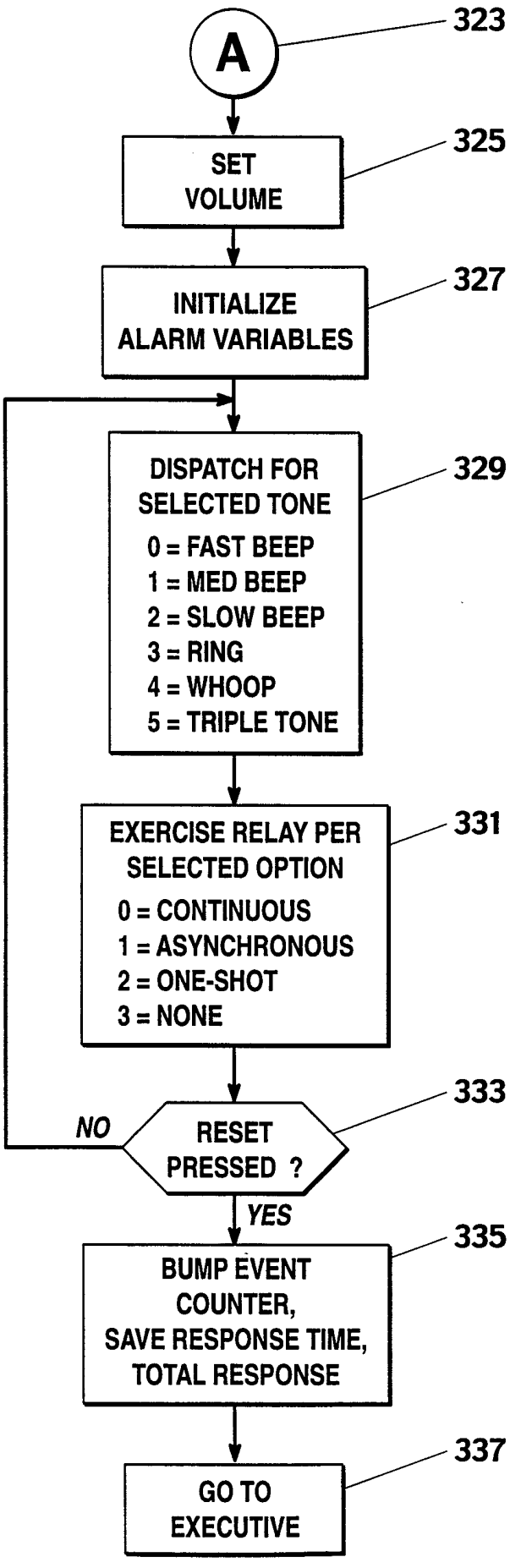
A
323
SET VOLUME
325
INITIALIZE ALARM VARIABLES
327
DISPATCH FOR SELECTED TONE
0 = FAST BEEP
1 = MED BEEP
2 = SLOW BEEP
3 = RING
4 = WHOOP
5 = TRIPLE TONE
329
EXERCISE RELAY PER SELECTED OPTION
0 = CONTINUOUS
1 = ASYNCHRONOUS
2 = ONE-SHOT
3 = NONE
331
NO
RESET PRESSED ?
333
YES
BUMP EVENT COUNTER, SAVE RESPONSE TIME, TOTAL RESPONSE
335
GO TO EXECUTIVE
337

Fig. 16

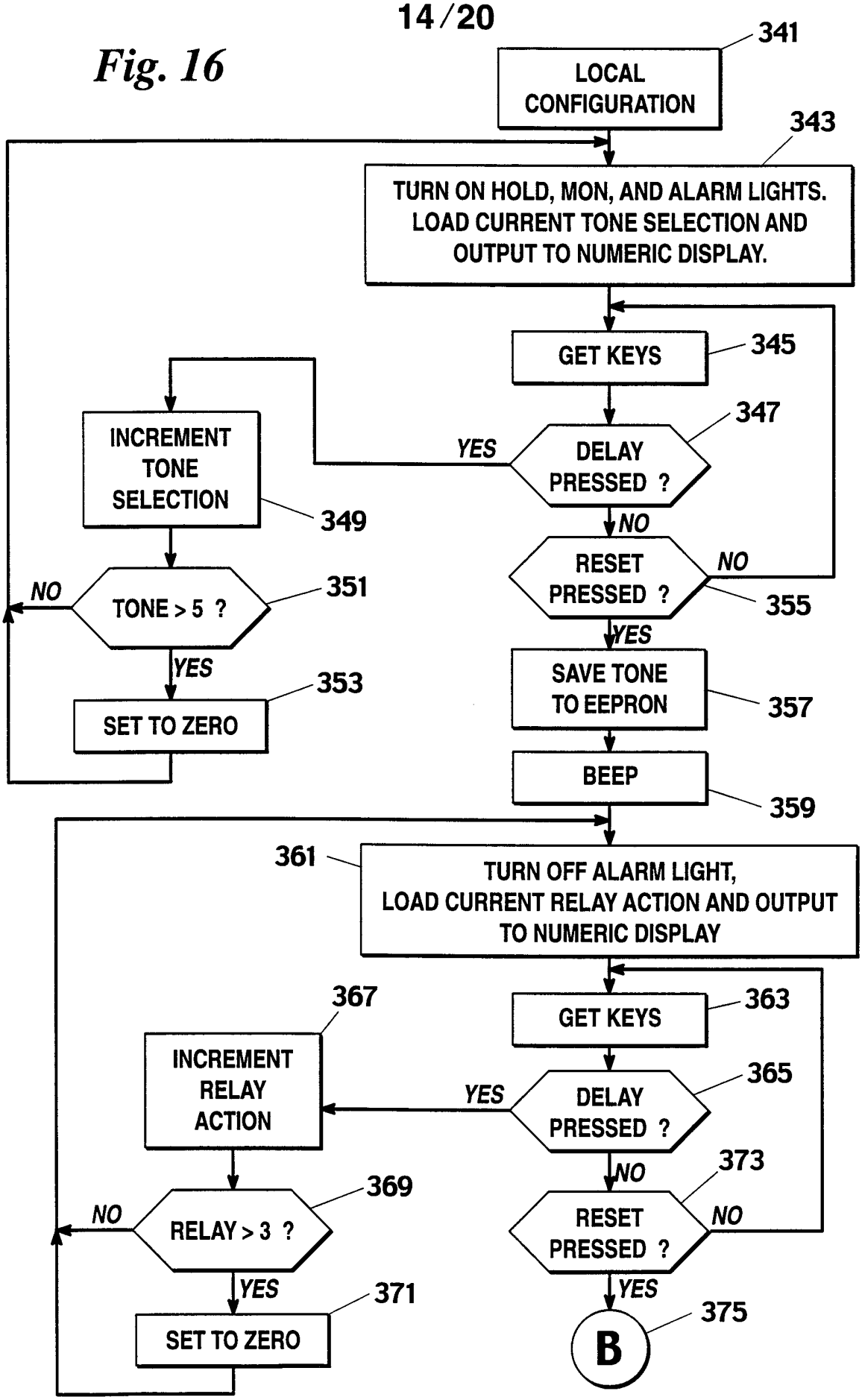
341
LOCAL CONFIGURATION
343
TURN ON HOLD, MON, AND ALARM LIGHTS. LOAD CURRENT TONE SELECTION AND OUTPUT TO NUMERIC DISPLAY.
GET KEYS
345
347
DELAY PRESSED ?
YES
NO
INCREMENT TONE SELECTION
349
TONE > 5 ?
351
NO
YES
SET TO ZERO
353
RESET PRESSED ?
355
NO
YES
SAVE TONE TO EEPRON
357
BEEP
359
361
TURN OFF ALARM LIGHT, LOAD CURRENT RELAY ACTION AND OUTPUT TO NUMERIC DISPLAY
GET KEYS
363
365
DELAY PRESSED ?
YES
NO
367
INCREMENT RELAY ACTION
RELAY > 3 ?
369
NO
YES
SET TO ZERO
371
RESET PRESSED ?
373
NO
YES
B
375

Fig. 17

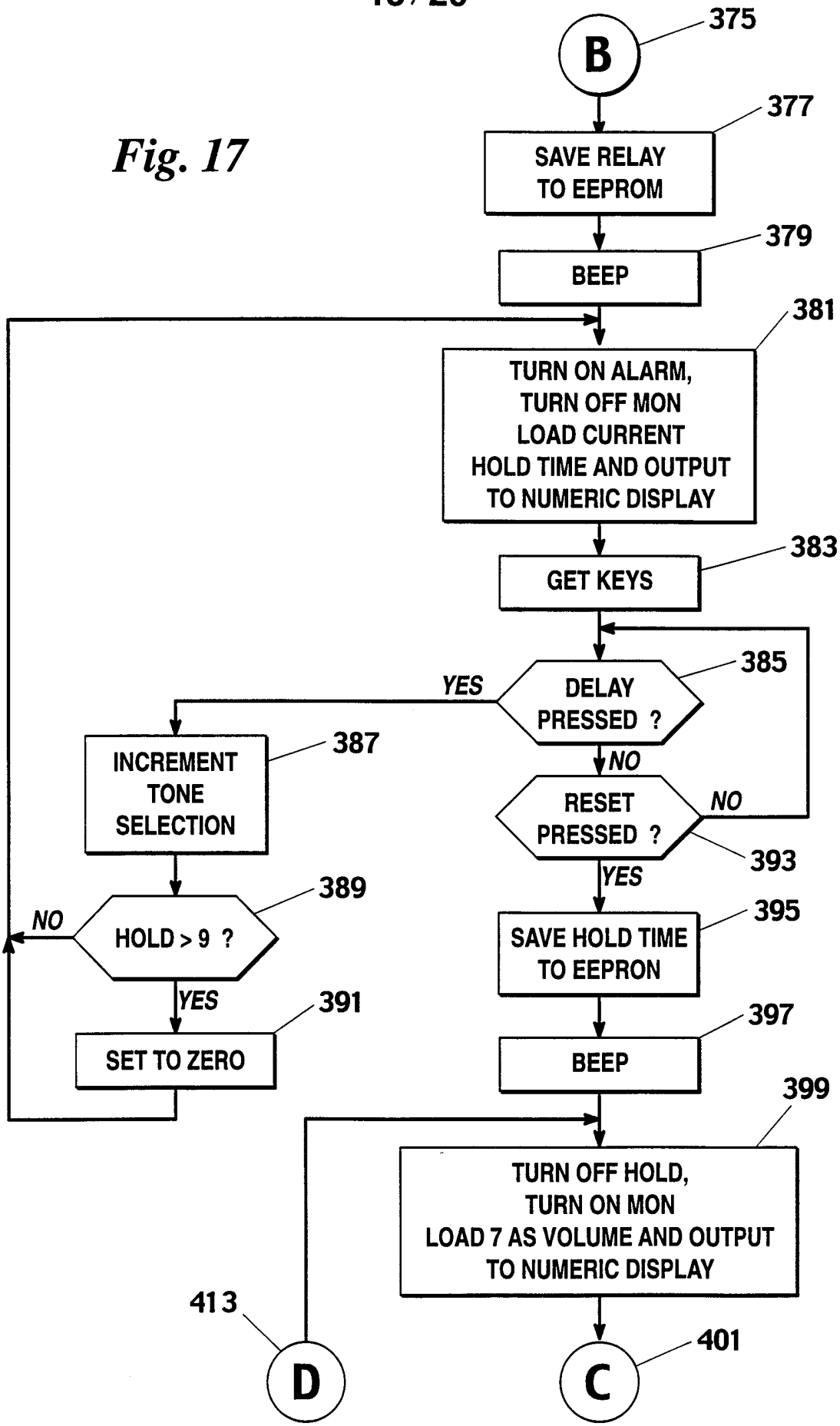
B
375
SAVE RELAY TO EEPROM
377
BEEP
379
TURN ON ALARM, TURN OFF MON LOAD CURRENT HOLD TIME AND OUTPUT TO NUMERIC DISPLAY
381
GET KEYS
383
DELAY PRESSED ?
385
YES
NO
INCREMENT TONE SELECTION
387
RESET PRESSED ?
NO
393
YES
HOLD > 9 ?
389
NO
YES
SET TO ZERO
391
SAVE HOLD TIME TO EEPRON
395
BEEP
397
TURN OFF HOLD, TURN ON MON LOAD 7 AS VOLUME AND OUTPUT TO NUMERIC DISPLAY
399
413
D
C
401

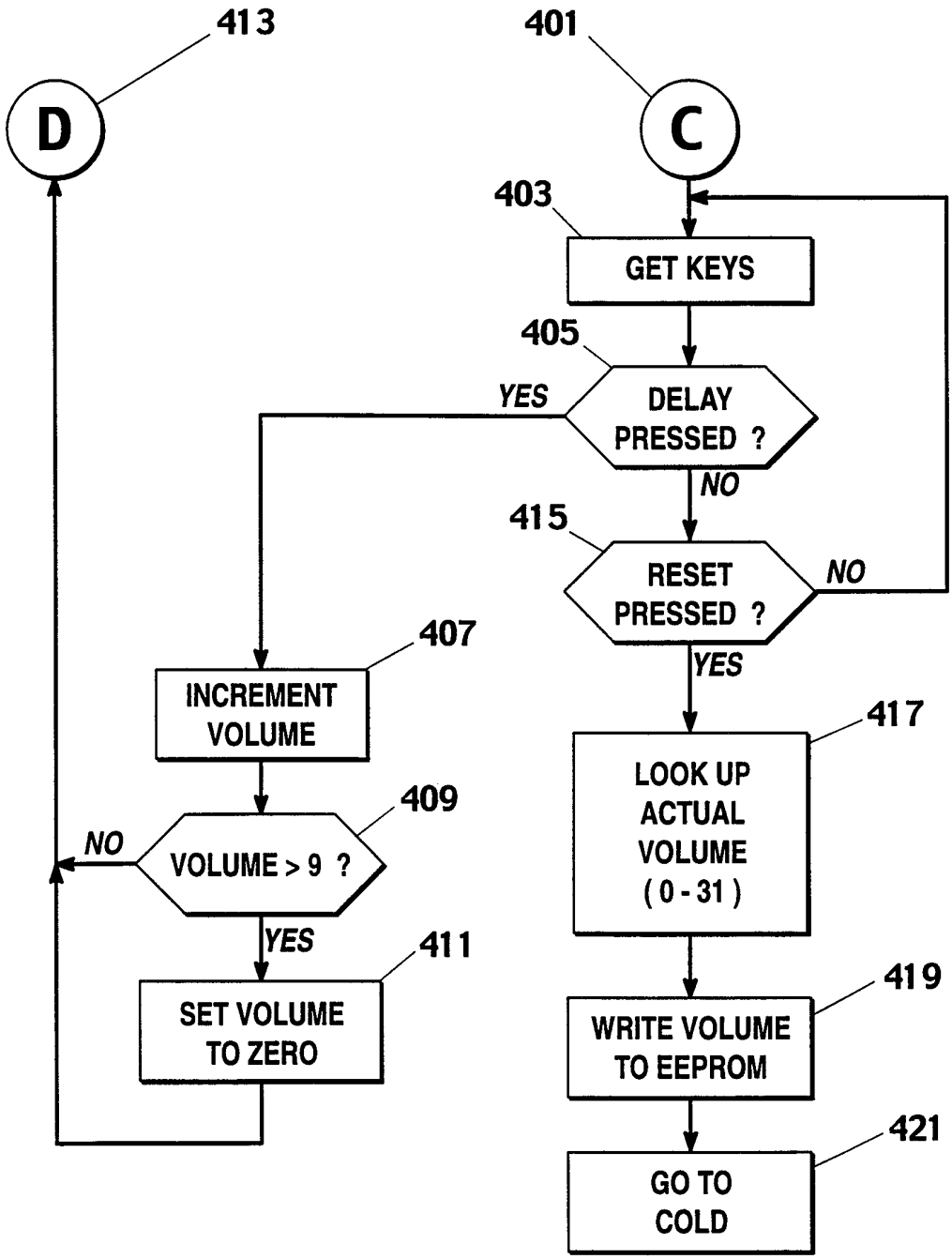
413
D
401
C
403
GET KEYS
405
DELAY PRESSED ?
YES
NO
415
RESET PRESSED ?
NO
YES
407
INCREMENT VOLUME
409
VOLUME > 9 ?
NO
YES
411
SET VOLUME TO ZERO
417
LOOK UP ACTUAL VOLUME (0 - 31)
419
WRITE VOLUME TO EEPROM
421
GO TO COLD

Fig. 18

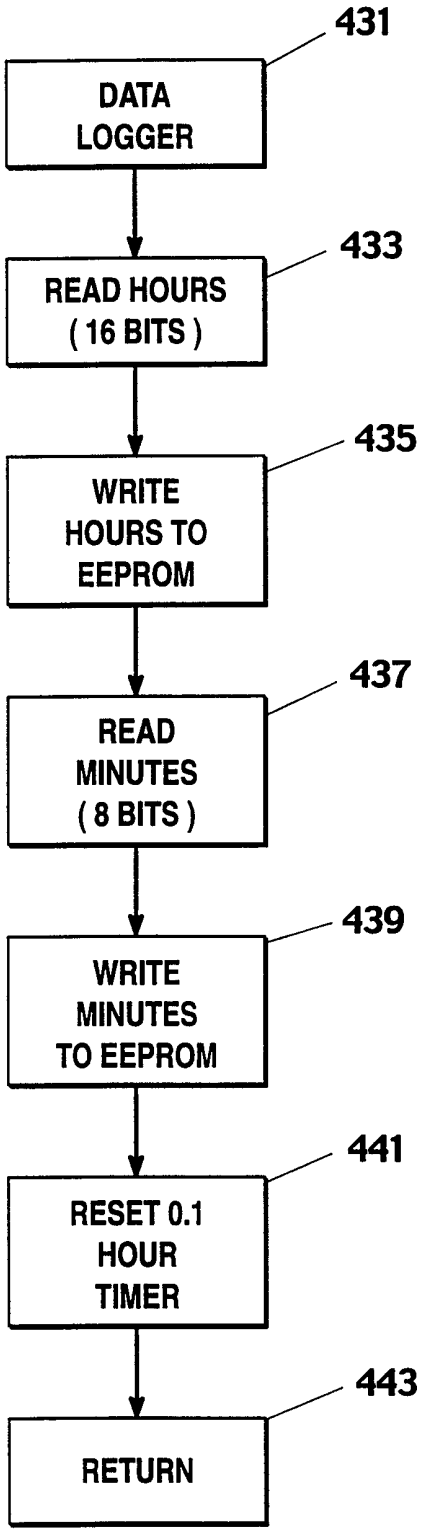
431
DATA LOGGER
433
READ HOURS (16 BITS)
435
WRITE HOURS TO EEPROM
437
READ MINUTES (8 BITS)
439
WRITE MINUTES TO EEPROM
441
RESET 0.1 HOUR TIMER
443
RETURN

Fig. 19

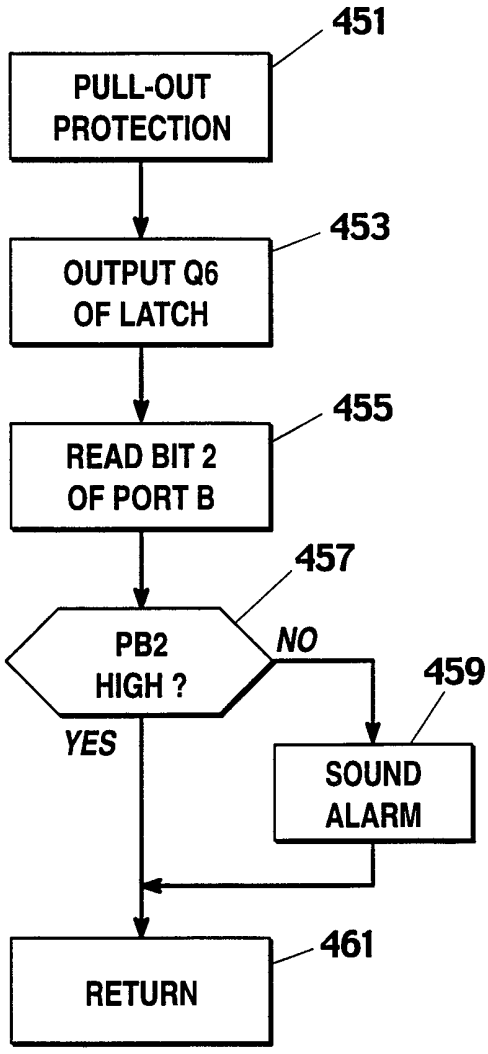
451
PULL-OUT PROTECTION
453
OUTPUT Q6 OF LATCH
455
READ BIT 2 OF PORT B
457
PB2 HIGH ?
NO
459
SOUND ALARM
YES
461
RETURN

Fig. 20

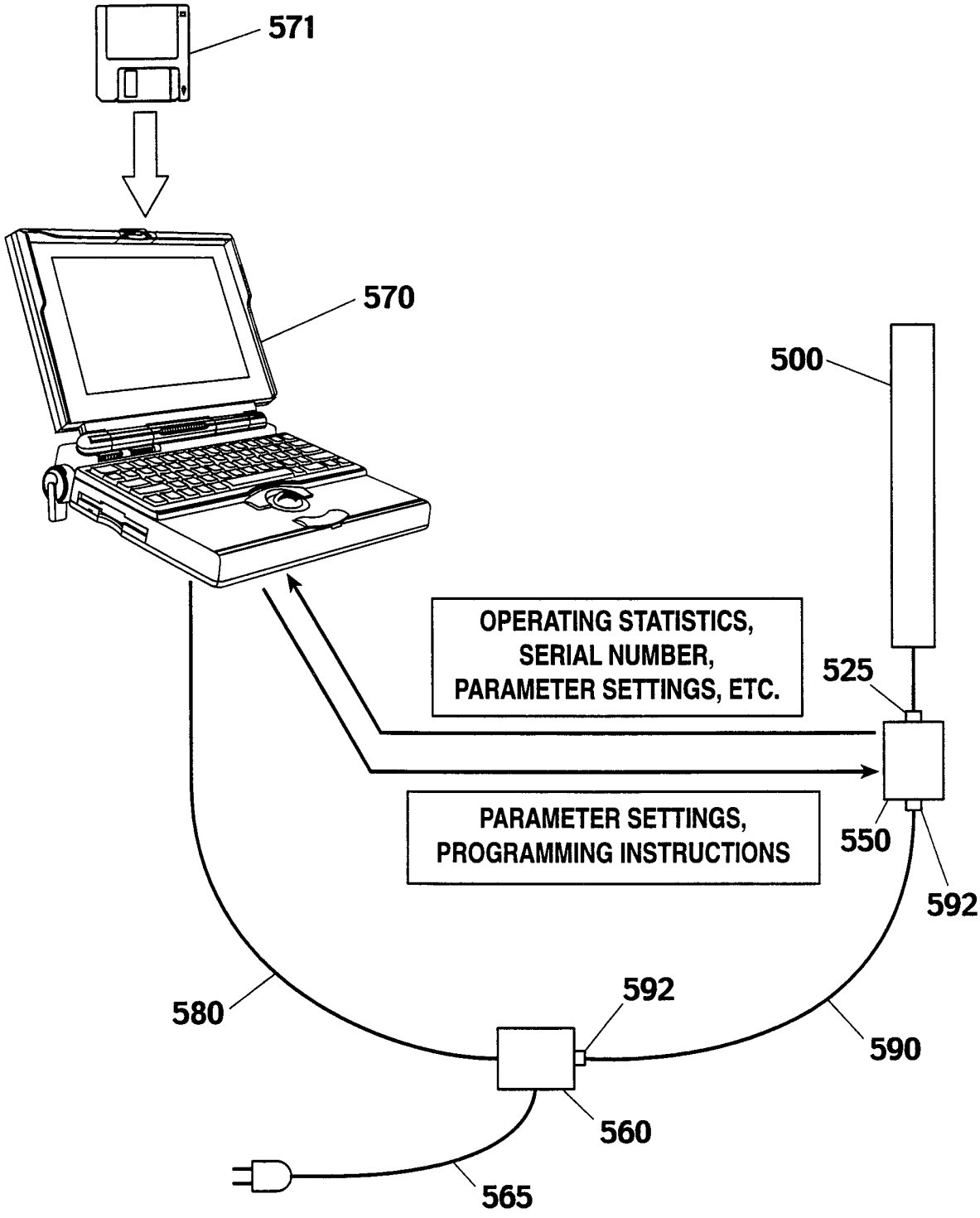
571
570
500
OPERATING STATISTICS,
SERIAL NUMBER,
PARAMETER SETTINGS, ETC.
525
PARAMETER SETTINGS,
PROGRAMMING INSTRUCTIONS
550
592
592
580
590
560
565

Fig. 21

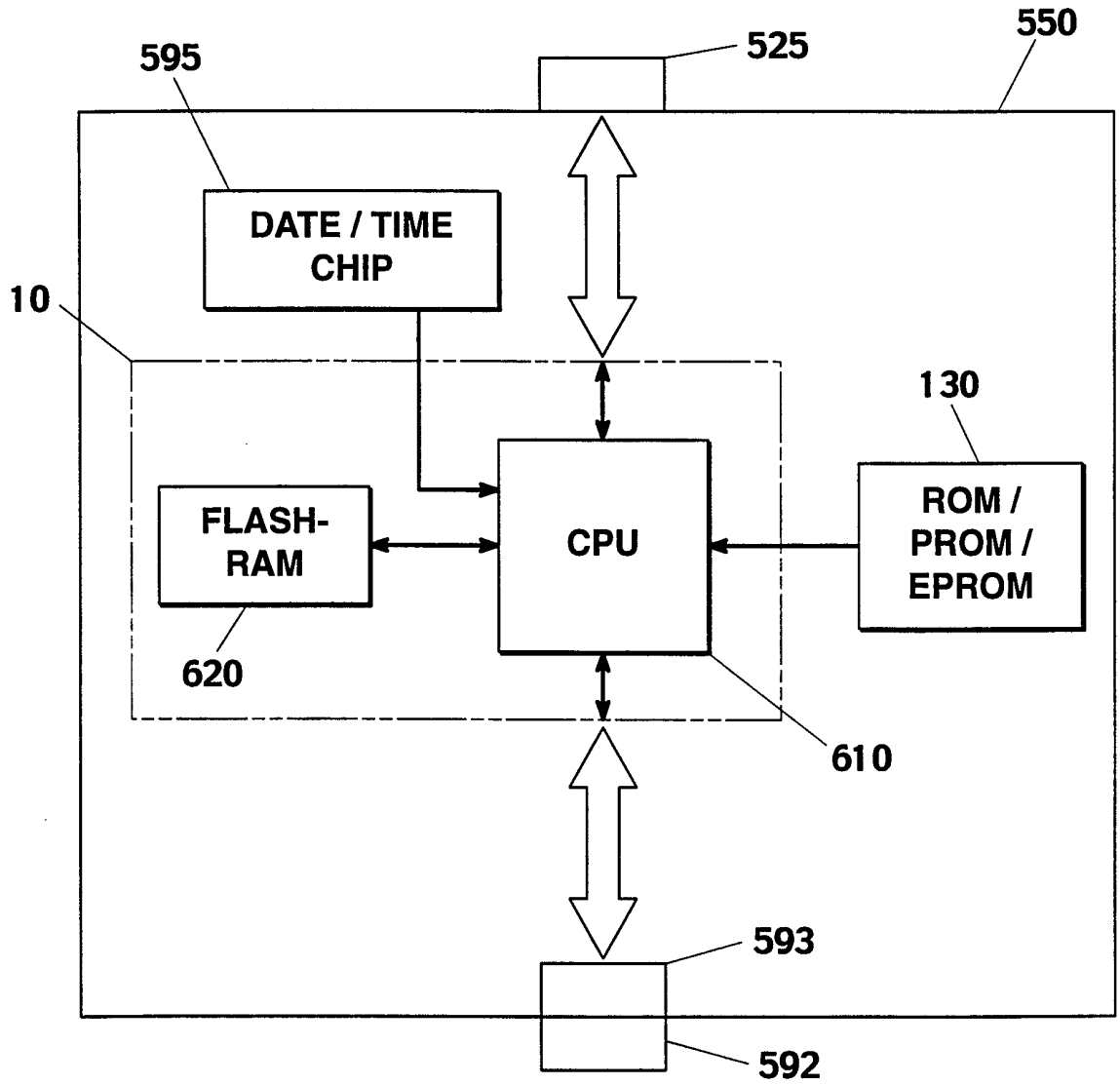
595
525
550
DATE / TIME CHIP
10
130
FLASH-RAM
CPU
ROM / PROM / EPROM
620
610
593
592

Fig. 22

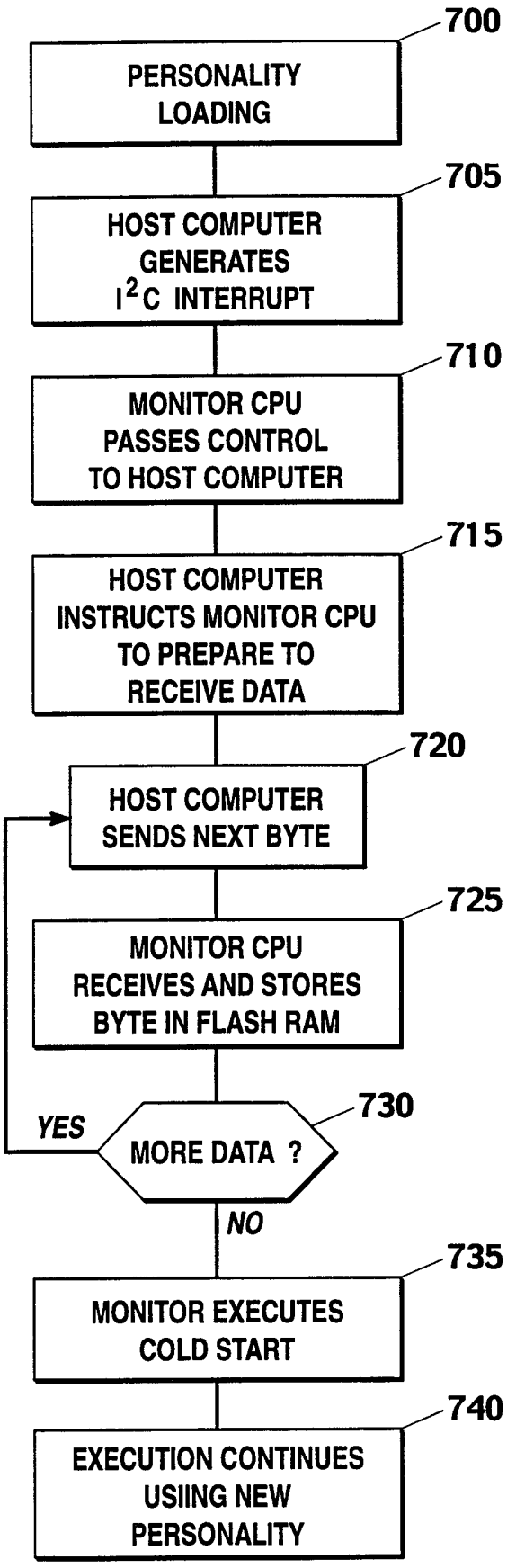
700
PERSONALITY LOADING
705
HOST COMPUTER GENERATES I2C INTERRUPT
710
MONITOR CPU PASSES CONTROL TO HOST COMPUTER
715
HOST COMPUTER INSTRUCTS MONITOR CPU TO PREPARE TO RECEIVE DATA
720
HOST COMPUTER SENDS NEXT BYTE
725
MONITOR CPU RECEIVES AND STORES BYTE IN FLASH RAM
730
YES
MORE DATA ?
NO
735
MONITOR EXECUTES COLD START
740
EXECUTION CONTINUES USIING NEW PERSONALITY

Fig. 23

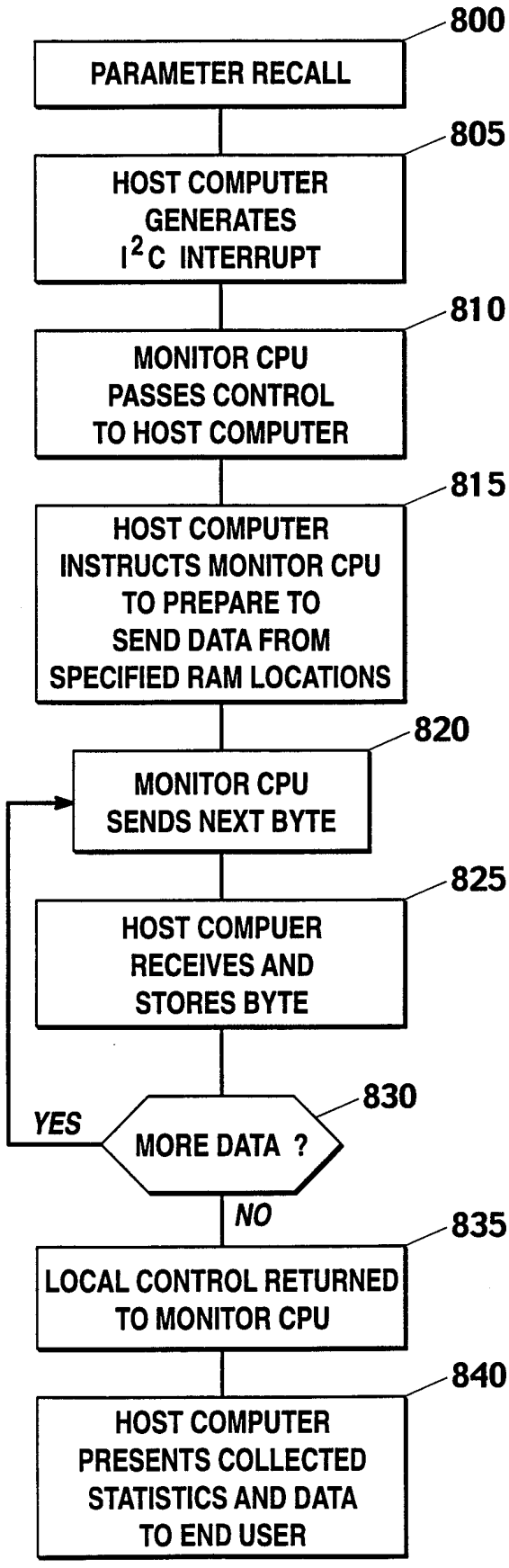
800
PARAMETER RECALL
805
HOST COMPUTER GENERATES I2C INTERRUPT
810
MONITOR CPU PASSES CONTROL TO HOST COMPUTER
815
HOST COMPUTER INSTRUCTS MONITOR CPU TO PREPARE TO SEND DATA FROM SPECIFIED RAM LOCATIONS
820
MONITOR CPU SENDS NEXT BYTE
825
HOST COMPUER RECEIVES AND STORES BYTE
830
YES
MORE DATA ?
NO
835
LOCAL CONTROL RETURNED TO MONITOR CPU
840
HOST COMPUTER PRESENTS COLLECTED STATISTICS AND DATA TO END USER

Fig. 24

INTERNATIONAL SEARCH REPORT

Inte. .ional Application No
PCT/US 99/04088

A. CLASSIFICATION OF SUBJECT MATTER
IPC 6 G08B21/00 A61G12/00

According to International Patent Classification (IPC) or to both national classification and IPC

B. FIELDS SEARCHED

Minimum documentation searched (classification system followed by classification symbols)
IPC 6 G08B A61G A61B

Documentation searched other than minimum documentation to the extent that such documents are included in the fields searched

Electronic data base consulted during the international search (name of data base and, where practical, search terms used)

C. DOCUMENTS CONSIDERED TO BE RELEVANT

Category °	Citation of document, with indication, where appropriate, of the relevant passages	Relevant to claim No.
Y	EP 0 191 906 A (BED CHECK CORP) 27 August 1986 see abstract; claim 1; figure 1 & US 4 565 910 A cited in the application & US 4 484 043 A cited in the application ---	1,9,16
Y	WO 96 03727 A (BED CHECK CORP ;NEWHAM PAUL F (US)) 8 February 1996 see page 16, line 27 - page 17, line 18; claims 1,2; figure 1 & US 5 554 835 A cited in the application ---	1,9,16
Y	WO 97 06519 A (HILL ROM CO INC) 20 February 1997 see claim 1; figures 1,2 ---	1,9,16

-/--

[X] Further documents are listed in the continuation of box C.

[X] Patent family members are listed in annex.

° Special categories of cited documents :

"A" document defining the general state of the art which is not considered to be of particular relevance

"E" earlier document but published on or after the international filing date

"L" document which may throw doubts on priority claim(s) or which is cited to establish the publication date of another citation or other special reason (as specified)

"O" document referring to an oral disclosure, use, exhibition or other means

"P" document published prior to the international filing date but later than the priority date claimed

"T" later document published after the international filing date or priority date and not in conflict with the application but cited to understand the principle or theory underlying the invention

"X" document of particular relevance; the claimed invention cannot be considered novel or cannot be considered to involve an inventive step when the document is taken alone

"Y" document of particular relevance; the claimed invention cannot be considered to involve an inventive step when the document is combined with one or more other such documents, such combination being obvious to a person skilled in the art.

"&" document member of the same patent family

Date of the actual completion of the international search	Date of mailing of the international search report
28 June 1999	06/07/1999

Name and mailing address of the ISA	Authorized officer
European Patent Office, P.B. 5818 Patentlaan 2 NL - 2280 HV Rijswijk Tel. (+31-70) 340-2040, Tx. 31 651 epo nl, Fax: (+31-70) 340-3016	Breusing, J

1

Form PCT/ISA/210 (second sheet) (July 1992)

INTERNATIONAL SEARCH REPORT

Inte. .onal Application No
PCT/US 99/04088

C.(Continuation) DOCUMENTS CONSIDERED TO BE RELEVANT

Category °	Citation of document, with indication,where appropriate, of the relevant passages	Relevant to claim No.
A	US 5 224 496 A (PALMER MORRIS J ET AL) 6 July 1993 see abstract; figure 3 see column 6, line 9 - line 18	10-12
A	WO 95 03596 A (HILL ROM CO INC) 2 February 1995 see the whole document	1
A	WO 95 22363 A (DEBIOTECH SA ;NEFTEL FREDERIC (CH)) 24 August 1995 see page 10, line 27 - line 35; figure 5	17
A,P	WO 98 10391 A (NEWHAM PAUL) 12 March 1998 see page 14; figure 1	1
A	PATENT ABSTRACTS OF JAPAN vol. 097, no. 004, 30 April 1997 & JP 08 322810 A (NIPPON DENSHI KOGYO KK), 10 December 1996 see abstract	1
A	PATENT ABSTRACTS OF JAPAN vol. 095, no. 010, 30 November 1995 & JP 07 168990 A (CANON INC), 4 July 1995 see abstract	2,3

1

INTERNATIONAL SEARCH REPORT

Information on patent family members

Inte. ,onal Application No
PCT/US 99/04088

Patent document cited in search report	Publication date	Patent family member(s)	Publication date
EP 0191906 A	27-08-1986	US 4484043 A	20-11-1984
		AT 29325 T	15-09-1987
		AT 60455 T	15-02-1991
		AU 562562 B	11-06-1987
		AU 2124183 A	24-04-1984
		AU 581356 B	16-02-1989
		AU 6662186 A	09-04-1987
		CA 1199988 A	28-01-1986
		DK 264384 A	29-05-1984
		EP 0107058 A	02-05-1984
		GR 79658 A	31-10-1984
		WO 8401457 A	12-04-1984
		US 4565910 A	21-01-1986
		ZA 8307147 A	24-12-1984
		CA 1235770 A	26-04-1988
		US 4700180 A	13-10-1987
WO 9603727 A	08-02-1996	US 5554835 A	10-09-1996
		US 5600108 A	04-02-1997
		US 5654694 A	05-08-1997
		US 5633627 A	27-05-1997
		US 5640145 A	17-06-1997
		AU 3145395 A	22-02-1996
		AU 3271395 A	22-02-1996
		CA 2194698 A	08-02-1996
		CA 2194699 A	08-02-1996
		GB 2305297 A,B	02-04-1997
		GB 2305761 A,B	16-04-1997
		WO 9603726 A	08-02-1996
		US 5623760 A	29-04-1997
WO 9706519 A	20-02-1997	US 5699038 A	16-12-1997
		AU 6596896 A	05-03-1997
		EP 0880768 A	02-12-1998
US 5224496 A	06-07-1993	NONE	
WO 9503596 A	02-02-1995	US 5561412 A	01-10-1996
		AU 7397994 A	20-02-1995
		CA 2166548 A	02-02-1995
		EP 0708951 A	01-05-1996
		US 5699038 A	16-12-1997
		US 5838223 A	17-11-1998
WO 9522363 A	24-08-1995	FR 2716286 A	18-08-1995
		AU 691258 B	14-05-1998
		AU 1815195 A	04-09-1995
		CA 2182722 A	24-08-1995
		DE 69502936 D	16-07-1998
		DE 69502936 T	08-10-1998
		EP 0744974 A	04-12-1996
		JP 9510054 T	07-10-1997
		US 5764159 A	09-06-1998
WO 9810391 A	12-03-1998	AU 4410197 A	26-03-1998
		GB 2332063 A	09-06-1999