Aug. 11, 1925. 1,549,143

P. A. MEEHAN

METHOD OF BURNING BRICK AND ANALOGOUS WARE IN TUNNEL KILNS AND CAR FOR BURNING THE WARE

Filed Dec. 15, 1921 2 Sheets-Sheet 1

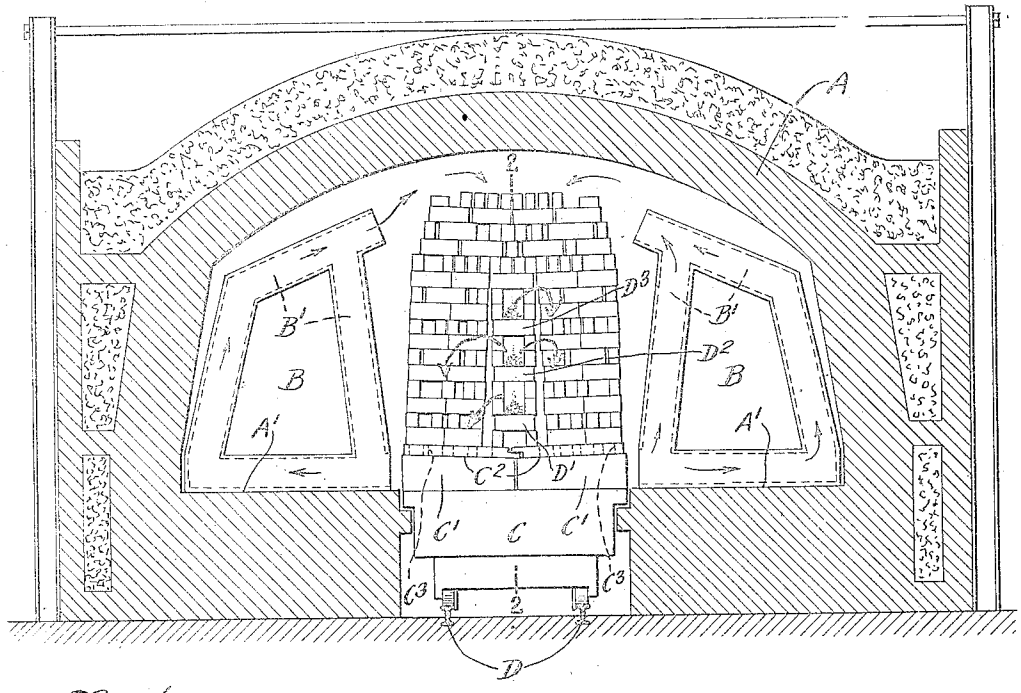

Fig. 1.

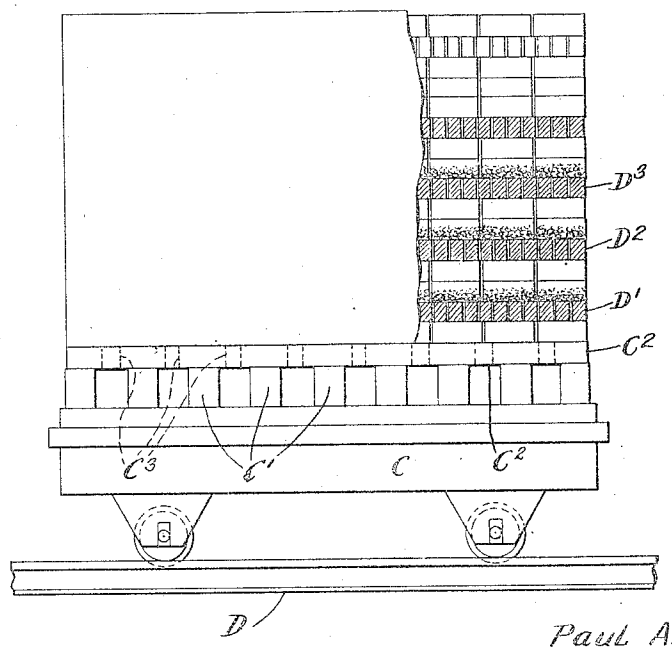

Fig. 2.

INVENTOR
Paul A. Meehan

BY
John E. Dubbell
ATTORNEY

Aug. 11, 1925. 1,549,143

P. A. MEEHAN

METHOD OF BURNING BRICK AND ANALOGOUS WARE IN TUNNEL KILNS AND CAR FOR BURNING THE WARE

Filed Dec. 15, 1921 2 Sheets-Sheet 2

Fig. 3,

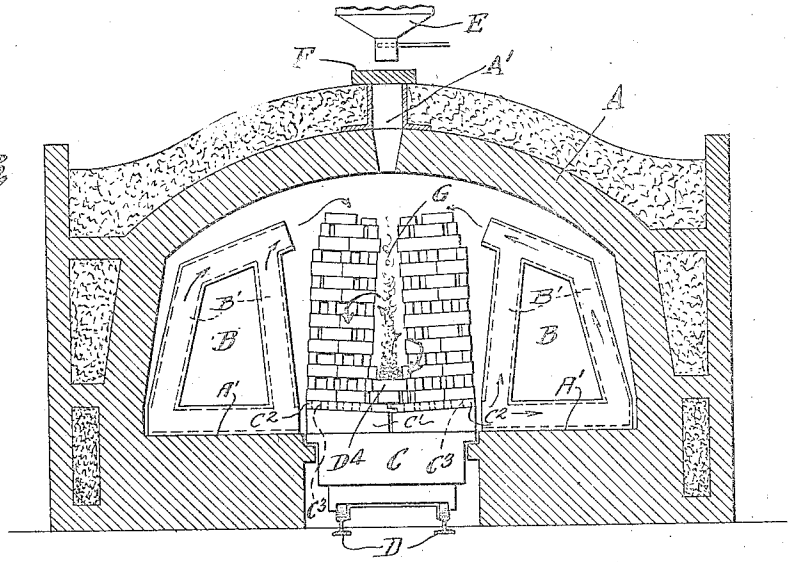

Fig. 4,

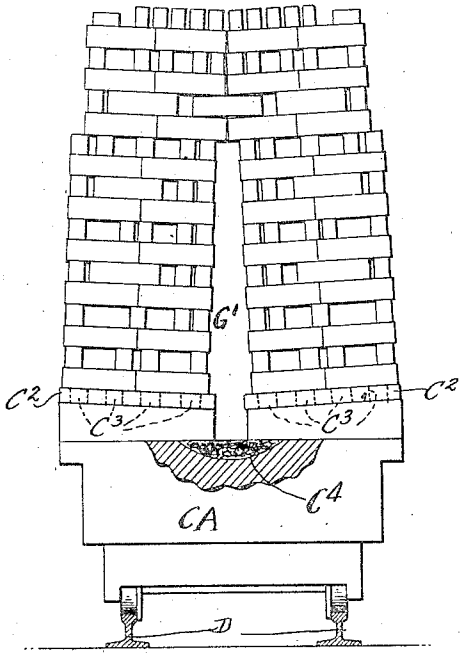

Fig. 5,

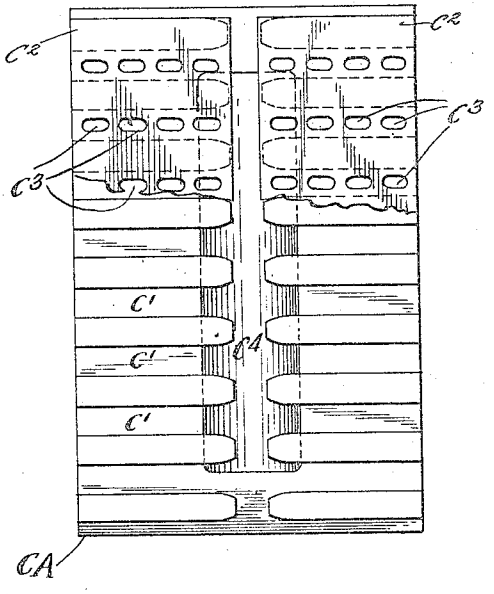

INVENTOR
Paul A. Meehan
BY
Edwin E. Dubbell
ATTORNEY

Patented Aug. 11, 1925. 1,549,143

UNITED STATES PATENT OFFICE.

PAUL A. MEEHAN, OF CLEVELAND, OHIO, ASSIGNOR TO AMERICAN DRESSLER TUNNEL KILNS, INC., OF CLEVELAND, OHIO, A CORPORATION OF NEW YORK.

METHOD OF BURNING BRICK AND ANALOGOUS WARE IN TUNNEL KILNS AND CAR FOR BURNING THE WARE.

Application filed December 15, 1921. Serial No. 522,526.

To all whom it may concern:

Be it known that I, PAUL A. MEEHAN, citizen of the United States, and resident of Cleveland, in the county of Cuyahoga and State of Ohio, have invented certain new and useful Improvements in Methods of Burning Brick and Analogous Ware in Tunnel Kilns and Car for Burning the Ware, of which the following is a specification.

In burning brick and analogous ware in tunnel kilns difficulty is experienced in getting sufficient heat into the portion of the load of ware on each kiln car traversed by the central longitudinal or vertical plane of the kiln and particularly the ware adjacent this plane at the bottom of the load and in general it has been found practically impossible to adequately burn this portion of the ware without either overheating the ware at the sides of the car or subjecting the ware to an otherwise unnecessarily prolonged heat soaking. The object of the present invention is to overcome this difficulty by supplementing the ordinary kiln heating means with provisions for locally heating the portion of the ware not adequately heated by the main kiln heating means. A further object is the provision of a suitable car.

In carrying out the invention I obtain this local heating effect by burning a suitable fuel such as coal or coke in the ware stacked on each car as it passes through the kiln. The local heating fuel thus burned in the ware may be deposited in the ware prior to the introduction of the cars carrying the ware into the kiln, though in some cases the fuel may be fed into the ware as the latter traverses the kiln through fuel charging holes formed in the roof of the kiln. In either event the ware should be stacked on the cars in such manner as to provide the proper combustion space for the local heating fuel, and to provide for the passage of the flame and products of combustion into the portion of the mass of ware to be heated thereby, and if a hearth or fire-box for the local heating fuel is not formed in the cars the ware should be stacked to provide such hearth or fire-box. When the local heating fuel is supplied through charging holes in the kiln to the ware during its transit through the kiln, the ware should be stacked to permit the passage of the fuel onto the hearth or grate on which it is to be burned.

My invention is applicable in general to kilns of either the muffle heated or open fire type. I am aware, of course, that various arrangements have heretofore been proposed for heating tunnel kilns by burning fuel on the cars carrying the ware as the latter pass through the kiln, but in such prior arrangements the kiln is heated actually or mainly by the fuel thus burned on the ware or ware carrying car and in general the heat distribution in such kilns is not better, but on the contrary, worse than in ordinary open fire or muffle heated kilns. With my invention the fuel burnt on the cars or in the ware furnishes but a small portion of the heat requirements of the kiln and the heat thus furnished is utilized as a means for overcoming unavoidable defects in the distribution of the heat furnished by the main kiln heating means.

The various features of novelty which characterize my invention are pointed out with particularity in the claims annexed to and forming a part of this specification. For a better understanding of the invention, however, and the advantages possessed by it, reference should be had to the accompanying drawings and descriptive matter in which I have illustrated and described preferred modes of carrying out my invention.

Of the drawings:

Fig. 1 is a transverse section of a tunnel kiln with a loaded car therein;

Fig. 2 is a side view of the car shown in Fig. 1 with the ware at the right hand side of the view shown in section on the line 2—2 of Fig. 1;

Fig. 3 is a view taken similarly to Fig. 1 illustrating a modified form of my invention;

Fig. 4 is an end elevation illustrating a second modification of my invention; and

Fig. 5 is a plan view with a portion of the ware supporting platform broken away.

In the drawings and referring first to the construction shown in Figs. 1 and 2, A represents a continuous tunnel kiln of the well known Dressler type in which the main kiln heating means comprise combustion chambers B mounted on benches A′ at the

sides of the pathway for the goods carrying cars C which run on the track rails D. The combustion chambers are formed with channels B′ in their walls extending transversely to the length of the kiln through which the kiln atmosphere may circulate in the direction indicated by the arrows to thereby transmit the heat generated in the combustion chambers to the ware. The cars C shown are of known type formed with channels C′ adjacent their upper surface which extend into the car structure immediately beneath the ware supporting platform and are open at their outer ends and are also open to the ware through ports or slots C^3 formed in the ware supporting platform C^2. The ware supporting platform as shown is inclined downward from each side of the car toward the center of the car to facilitate the stacking of the main mass of ware on the car in two columns or masses one at each side of the central plane through the kiln and each normally inclined toward the other at its upper end. As shown the ware stacked on the car is bricks. The local heating which it is the object of the present invention to provide is obtained in the construction shown in Fig. 1 by the piling of the bricks to provide one or more hearths or grates extending lengthwise of the car along the vertical central plane of the latter. As shown there are three of these hearths, D′, D^2 and D^3, each being formed of a single course of bricks extending transversely to the length of the car and spaced to provide narrow draft channels between the bricks. The bricks forming the lower hearth D′ are supported at their ends by spaced apart longitudinal courses of bricks placed on edge and the side wall of the fire-box above each hearth is shown as formed by longitudinally extending courses of bricks arranged two high and supported by the ends of the corresponding hearth forming bricks. The bricks forming the supports for the hearth forming brick and side walls of the combustion chambers are loosely spaced as shown in Fig. 2 to provide lateral ports from the fire-box or combustion chambers into the adjacent masses of bricks. With the bricks loaded on the cars as shown in Figs. 1 and 2, the proper amount of fuel is placed on each hearth or each fire-box preparatory to the introduction of the car into the kiln. Advantageously the fuel used is anthracite coal or coke breeze and is distributed along the length of the fire boxes. In ordinary practice appreciably more fuel is placed on the hearth D′ than on the hearths D^2 and D^3, as the greatest need for the local heating effect is at the bottom of the loaded ware. With ware loaded as shown in Figs. 1 and 2 and with the fuel in place in the fire-boxes as the loaded cars pass through the kiln they are heated up more or less gradually to the maximum temperature reached in the kiln and are then cooled down to a suitable temperature after removing. The fuel supplied on the hearths D′, D^2 and D^3 ignites when the cars reach a point in the kiln at which the temperature is sufficiently high for the purpose and the heat thus generated is almost wholly absorbed by the adjacent portion of the ware which is that portion less readily heated by the main kiln heating means.

While I have illustrated the use of my invention in connection with a muffle heated kiln of the Dressler type, it is to be understood that the invention is useful in other types of kilns, and in general is even more desirable in other types of kilns since in other types of kilns in use the heat distribution throughout the ware is in general less uniform than in the Dressler type of kiln.

In the modification illustrated in Fig. 3 fuel to provide the local heating effect is introduced into the ware as the latter is in transit through the kiln shown as of the Dressler type, through one or more suitably disposed charging orifices A′ formed in the roof of the kiln. As shown a fuel supply hopper E is suspended above each charging orifice A′ which may be closed when coal is not being passed into the furnace by a suitable brick or damper F. The ware on the cars, in carrying out my invention in accordance with Fig. 3, should be piled to provide a port or ports in the upper portion of the ware through which the fuel may fall from the charging orifice on to the hearth D^4 provided for the purpose. This hearth as shown is like the hearth D′ of Figs. 1 and 2, and as shown the port G through which the fuel falls on to this hearth extends the full length of the car and is provided by arranging the ware on the car in two spaced apart masses inclined toward one another.

In some cases the hearth for the auxiliary heating effect may be formed in the car itself as distinguished from forming it in the ware piled on the car. As shown, for example, in Figs. 4 and 5, the hearth C^4 is formed below the level of the work supporting platform C^2 of the car CA adjacent the center of the car, and usually below the bottom of the channels C′ when the latter are used, the products of combustion passing mainly up from the burning fuel on the hearth C^4 into the longitudinally extending channel G′ formed in the ware loaded on the car and thence into the bricks at the sides of the channel.

My invention is especially adapted for use in burning bricks, because of the ease with which the ware may be arranged to obtain the desired local heating, and because the relatively large tonnage of bricks as compared with most other ware necessary for

commercial, economical operation leads to a reduction to the minimum of the prolounged heat soaking treatment by which alone it is possible to adequately heat the lower central portions of the ware on the cars without overheating the ware at the side of the car with the ordinary kiln heating means. The amount of fuel which must be burnt to produce a substantially beneficial local heating effect is comparatively small; and I have found in the use of my invention that with a comparatively non-volatile fuel such as anthracite coal or coke breeze containing but little volatile matter, it is possible to obtain this local overheating without damaging any of the ware or at most only a very small portion of the ware when the latter is a coarse product such as bricks.

While in accordance with the provisions of the statutes I have illustrated and described the best modes of carrying out my invention now known to me, it will be apparent to those skilled in the art that changes in form may be made without departing from the spirit of my invention as set forth in the appended claims.

Having now described my invention, what I claim as new and desire to secure by Letters Patent, is:

1. The improved method of heating ware in a continuous tunnel kiln which consists in supplying the main portion of the heat requirements of the kiln in the usual manner and separately supplying heat to secure a local heating effect obtained by burning fuel in proximity to the lower portion of the ware in the kiln along the central longitudinal central plane through the kiln.

2. The improvement in the operation of heating ware on cars in their passage through a tunnel kiln heated in the usual manner, which consists in arranging the ware to provide a combustion space extending longitudinally of the kiln along the vertical central plane through the kiln adjacent the bottom of the mass of ware on the kiln and supplying solid fuel to said combustion space to thereby locally heat the ware in proximity to said combustion space.

3. A car of the character described comprising a wheeled platform upon which bricks may be stacked, and a fuel box located within and removed from the sides of the car.

4. A car of the character described comprising a wheeled platform having a bed thereon provided with heat flues extending transversely of the car, and a fuel box fashioned in the bed at a point removed from the sides of the car and communicating with said flues.

5. A car of the character described comprising a wheeled platform upon which bricks may be stacked, and a fuel box located within and removed from the sides of the car, such box extending longitudinal of the car through substantially its length.

6. A car of the character described comprising a wheeled platform having a bed thereon constructed with a series of transverse heat flues, each flue having a series of hollow flue blocks adapted to convey heat products upward and with a longitudinal fuel box removed from the sides of the car and adapted to supply heat to said flues and to bricks set in stacks upon said bed.

7. A car of the character described comprising a wheeled platform, a bed thereon, a longitudinal central fuel box formed in said bed and transverse heat flues also formed therein and having their inner ends in communication with said fuel box and their outer ends open to receive heat.

8. A car of the character described comprising a wheeled platform upon which brick may be stacked, and a fuel box located in the longitudinal central portion thereof.

9. The combination with a car comprising a wheeled platform having a longitudinal fuel box located near the middle thereof, of bricks laid in a stack, the bricks occupying the central portion of the stack set to form a combustion chamber above the fuel box.

Signed at Cleveland, in the county of Cuyahoga and State of Ohio this 13th day of December A. D. 1921.

PAUL A. MEEHAM.