(No Model.)

H. SPENCER, Jr.

BLIND FASTENING DEVICE.

No. 590,711. Patented Sept. 28, 1897.

Fig. 1.

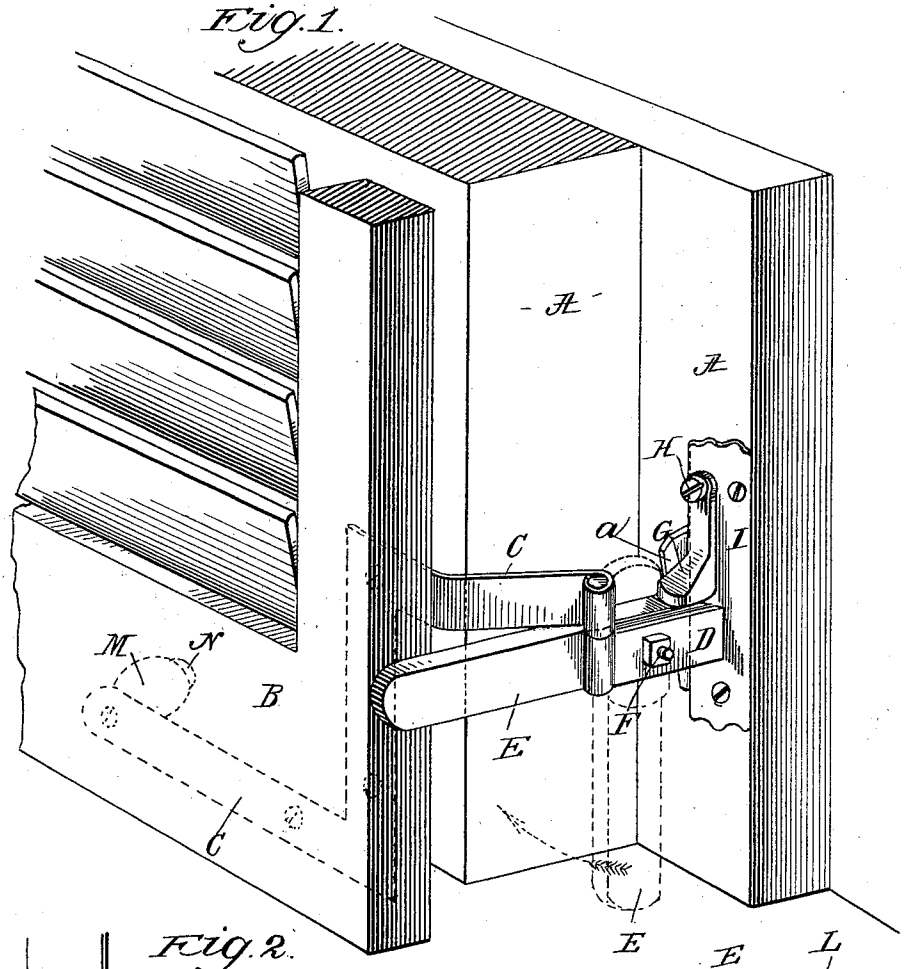

Fig. 2.

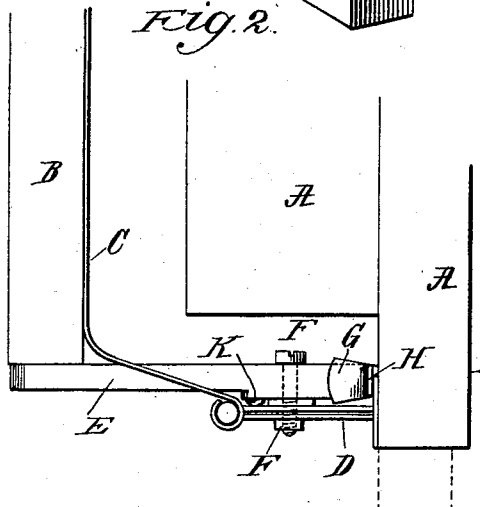

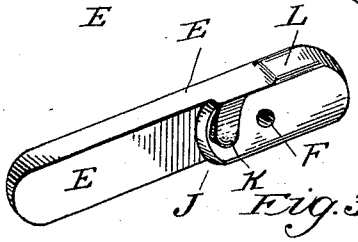

Fig. 3.

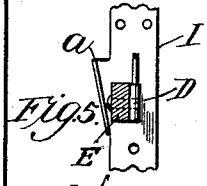

Fig. 5.

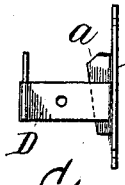

Fig. 4.

Witnesses
Edward L. Rowland.
A. Bodine Morrison

Harvey Spencer Jr
Inventor

By his Attorney Phillips Abbott

THE NORRIS PETERS CO., PHOTO-LITHO., WASHINGTON, D. C.

UNITED STATES PATENT OFFICE.

HARVEY SPENCER, JR., OF NEW YORK, N. Y.

BLIND-FASTENING DEVICE.

SPECIFICATION forming part of Letters Patent No. 590,711, dated September 28, 1897.

Application filed October 24, 1896. Serial No. 609,966. (No model.)

To all whom it may concern:

Be it known that I, HARVEY SPENCER, Jr., a citizen of the United States, and a resident of New York city, in the county of New York and State of New York, have invented certain new and useful Improvements in Blind-Fastening Devices, of which the following is a specification.

My invention relates to a new and useful device for fastening blinds, and is adapted to be attached to or made as a part of the ordinary and most approved form of blind-hinge for outside blinds—*i. e.*, those having a bracket-like, stationary member comprising a base-plate and an outwardly-extending part with an upwardly-presented trunnion on its end adapted to be set upon the face of the casing or equivalent part, the base-plate being parallel with the side of the house and the bracket-like extension at right angles thereto, and a swinging member which engages, by means of an eye, with the trunnion at one end and at the other end is screwed flatwise to the face of the blind, the bracket of the stationary member being in one horizontal plane and the horizontal part of the swinging member being in another and different horizontal plane located above the plane of the stationary part.

By my invention I avoid the necessity of having any appliances attached to the sides of the house to hold the blind open and also obviate all danger incident to persons leaning out of the window to fasten or unfasten the blinds, and I so construct my device that rattling of the blind is prevented and defacement of the sill and of the side of the house by reason of the presence thereon of cumbersome fastening devices is avoided. Unobtrusive fastening devices on the sill, however, are desirable to hold the blind closed.

Briefly stated, my invention consists in a pivoted lever or brace fastened to the stationary or non-swinging part of the lower hinge of the blind. The lever is gravity-acting in operation, so that when the blind is open it can be swung up into operative position and in turn released without leaning out of the window and with one hand only, and by its engagement with the rear edge of the blind it securely holds the same and may be arranged to exert pressure upon the blind, so that it will be held against the side of the house or a suitable stop provided for it, if desired, thus avoiding rattling. I prefer to use a rubber-tipped knob attached to the side of the house or to the blind, against which the blind shall be stopped to avoid defacing the house.

Referring to the drawings, Figure 1 illustrates a perspective of portions of the side of a window-casing and blind, showing my invention in operative position. Fig. 2 illustrates a plan view of that which is shown in Fig. 1. Fig. 3 illustrates a detail of the lever. Fig. 4 illustrates a detail of one form of the stationary part of the blind-hinge. Fig. 5 illustrates a front view of that which is shown in Fig. 4. These last two figures are reduced in size.

A is the window-casing, which may be of any preferred construction.

B is the blind.

C is the member of the hinge which is attached to the blind and swings with it.

D is the member of the hinge which is attached to the casing and does not swing.

Referring now to the parts which constitute my invention, E is a lever which is pivoted in any suitable manner, as at F, to the stationary part D of the hinge.

G is a swinging gravity-acting latch which is pivoted at H to the base-plate I of the stationary part of the hinge.

The lever E is preferably made with an offset J (see Fig. 3) and is provided with a cam-shaped rib or projection K, and, if desired, it may have an enlarged upwardly-projecting section L for the latch, hereinafter referred to, to engage with.

a is a short flange made on the base-plate I of the hinge, projecting outwardly therefrom, and its upper end is preferably inclined laterally from the base-plate, as shown best in Fig. 5, so that the rear end of the lever E, when being swung into its horizontal position, will pass between the bracket and the inclined surface of this flange and be clamped between it and the part D of the hinge. Thus the lever E, when in its horizontal position, will be more firmly supported and strain taken away from the pivot or bolt F because of the lateral thrust given to the bar or lever by the inclined surface of the flange, which will

cause its other end to press against the edge of the opened blind.

M is a block or suitable projecting knob, preferably tipped with rubber N, substantially the same as the well-known base-board stop, which is fastened in any suitable manner to the outside of the blind, but not in the position shown in Fig. 1, it being illustrated there because of the fact that the blind in that drawing is not shown as of full width, but preferably at about the same distance from the farther edge of the blind as the last screw of the hinge C is from the near edge of the blind. Its precise location upon the blind is, however, a matter of no consequence. No claim is made to this feature. It is illustrated and described merely to show all parts of a blind when provided with this invention. It may be fixed to the house, if preferred.

The operation is as follows: When the blind is closed and my invention not in operation, the latch hangs by gravity in a position shown in Fig. 1, and the lever E hangs vertically, as shown in dotted lines in that figure. When, however, the blind is open, it is swung back against the side of the house until stopped by the rubber-tipped stop M N. Then the operator with one hand moves the lever E upwardly, as indicated by the arrow in Fig. 1, until its forward end passes behind the rear edge of the blind, and at about that time the cam-shaped projecting surface K takes a bearing against the rear side of the stationary part of the hinge, so that the point of the lever E is thrust laterally against the rear edge of the blind. By the time the lever E has taken its horizontal position its crowding against the rear edge of the blind is such as to press the blind with considerable force against the side of the house, or against the buffer N of the knob M, if it be used. The lever E is maintained in proper position to exert this pressure by reason of the adjustment of the bolt or pivot F and the nut thereof, and when the lever has taken its normal position the swinging latch G (which has during the preceding operations been moved out of the way, if it interfered therewith) is again allowed to swing automatically into its normal position, where it is held by the action of gravity, and when in that position it overlaps the rear end of the lever E, as seen in Fig. 2, and prevents it from dropping. In this way the blind is held firmly open and all rattling is obviated.

When it is desired to close the blinds, the movements of the parts above described are reversed and the lever E allowed to attain its vertical position, as shown in dotted lines in Fig. 1, whereupon the blind may be closed; and it will be particularly noted that one hand only is required to manipulate the device, and also that it is peculiarly strong and effective, since its action is not that of a mere hook which catches over some part of the blind or hinge, and thus holds it, but on the contrary that the lever acts as a brace or crowding device which is supported at two points—*i. e.*, by its bolt and the point of contact with the hinge at K or its equivalent—and that in operation it puts the blind under pressure by crowding it against the side of the house, and consequently there is no rattling of any of the parts; and it will be further observed that under my invention no fastening devices are required upon the side of the house, and very simple and unobtrusive ones only are necessary to hold the blinds closed; furthermore, that when the knob M N is employed no defacement either of the side of the house or of the blind is possible when the latter is open; also, that no part of the operator's body is projected beyond the plane of the window, excepting his hand, to manipulate the parts; that the parts are exceedingly inexpensive and durable in their character, and that the invention may be applied to outside blinds and blind attachments as now commonly constructed by simply drilling suitable holes through the bracket part of the stationary member of the hinge and attaching the necessary added parts.

The knob M N is not essential. If preferred, the free edge of the blind may rest against the house, the adjustments being such as to exert the proper pressures to hold it and to prevent rattling; also, the parts may be made of any desired material and the cam action or squeezing effect produced in a variety of ways, the projecting cam-like surface K being illustrated by me as one method only; also, by proper modification of construction the lever and coacting parts may be located on the blind and made to engage with the stationary part of the hinge instead of being constructed as shown. I prefer, however, the form shown.

I claim—

1. In combination with a blind a hinge the members whereof are located in different horizontal planes, a lever or brace pivotally connected to the bracket of the lower member one end of which is adapted to be swung outwardly and upwardly into engagement with the rear edge of the blind, and the other into engagement with a laterally-bearing surface, and a device to sustain the said lever in its operative position, for the purposes set forth.

2. In combination with a blind, a hinge the stationary member whereof is provided with a base-plate and bracket projecting therefrom, a bar or brace pivoted to said bracket, and provided with a cam-shaped surface whereby it is given a lateral thrust, when in operative position, thus exerting pressure upon the blind, for the purposes set forth.

3. A blind-fastening device, comprising a lever or brace pivoted at or near one end to the stationary member of the hinge, said stationary member itself having an inclined surface adapted to engage with the lever as it approaches the horizontal position, thus re-

lieving the pivot of strain, and crowding the lever against the blind, and means to maintain the lever in said horizontal position, for the purposes set forth.

4. A blind-fastening device comprising a base-plate, a bracket projecting at right angles therefrom, a lever or brace pivoted to the bracket, an inclined surface on the base-plate, adapted to engage with its rear end, and a cam-shaped surface on the lever, outside of the pivot, whereby the lever is braced laterally, and strain removed from its pivot, and a latch to maintain the lever in said operative position, for the purposes set forth.

Signed at New York, in the county of New York and State of New York, this 22d day of October, A. D. 1896.

HARVEY SPENCER, JR.

Witnesses:
PHILLIP ABBOTT,
A. BODINE MORRISON.