June 4, 1935. F. K. HENDRICKSON 2,003,362

ROVING FRAME BUILDER MOTION

Filed May 17, 1933

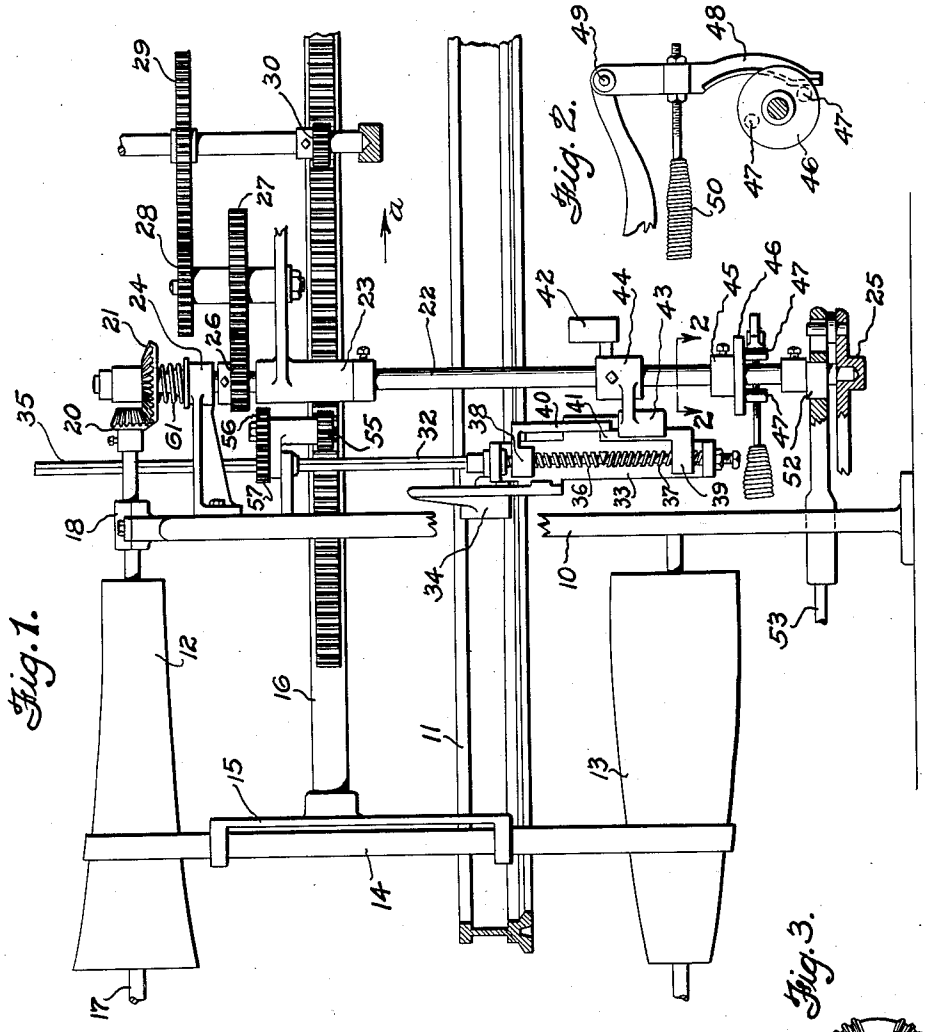

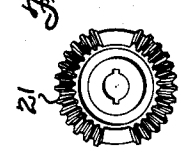

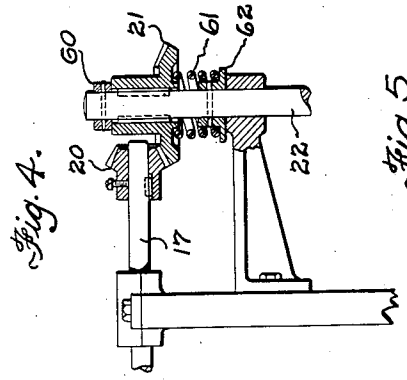

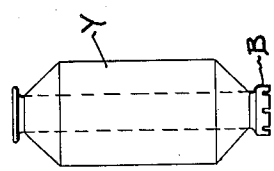

INVENTOR.

Fred K. Hendrickson.

BY

Southgate Fay & Hawley

ATTORNEYS.

Patented June 4, 1935 2,003,362

UNITED STATES PATENT OFFICE

2,003,362

ROVING FRAME BUILDER MOTION

Fred K. Hendrickson, Worcester, Mass., assignor to Whitin Machine Works, Whitinsville, Mass., a corporation of Massachusetts

Application May 17, 1933, Serial No. 671,549

1 Claim. (Cl. 118—33)

This invention relates to roving frames and particularly to builder motions used thereon.

It is the general object of my invention to provide an improved construction in such builder motions by which reliable and safe operation is assured.

To the accomplishment of this object, my invention relates to certain arrangements and combinations of parts which will be hereinafter described and more particularly pointed out in the appended claim.

A preferred form of the invention is shown in the drawing, in which

Fig. 1 is a side elevation of a roving frame builder motion embodying my invention;

Fig. 2 is a detail plan view, taken along the line 2—2 in Fig. 1;

Fig. 3 is a plan view of an interrupted gear to be described.

Fig. 4 is a detail sectional elevation of certain parts, and

Fig. 5 is a side elevation showing a type of winding for which my improved builder motion is well adapted.

Referring to the drawing, I have shown parts of a roving frame comprising a fixed cross frame member 10, a vertically movable member 11 forming part of the bobbin carriage, an upper cone pulley 12, a lower cone pulley 13, a belt 14 connecting the pulleys 12 and 13, and a belt shipper 15 mounted on a horizontally movable rack bar 16.

The upper cone pulley 12 is mounted on a shaft 17 rotatable in a bearing 18 and rotated at constant speed by the usual driving mechanism. The lower cone pulley 13 is connected to control the speed of the bobbins, which speed is gradually reduced as the belt 14 is shifted toward the right in Fig. 1.

The shaft 17 is also provided with a bevel pinion 20 mounted at the end thereof and engaging an interrupted bevel gear 21 (Figs. 1 and 3). The gear 21 is mounted on a tumbler shaft 22 rotatable in fixed bearings 23, 24 and 25. The tumbler shaft 22 is connected through gears 26, 27, 28 and 29 to a pinion 30 which engages the teeth on the rack bar 16. Consequently, rotation of the tumbler shaft 22 causes a corresponding endwise movement of the rack bar 16 and a shifting of the belt 14 on the speed-changing pulleys 12 and 13.

An upright shaft 32 is mounted in bearings on a plate 33, which in turn is secured to a bracket 34 fixed on the carriage member 11 and vertically movable therewith. The upper portion of the shaft 32 is of square cross section, as indicated at 35, and the lower portion of the shaft 32 is provided with right and left-hand threaded portions 36 and 37. Threaded blocks 38 and 39 are mounted on the threaded portions 36 and 37 respectively and are held from rotation relative to the bearing plate 33 but are at the same time slidable relatively thereto.

The blocks 38 and 39 are provided with offset overlapping arms 40 and 41 positioned for engagement by stop plates 42 and 43 mounted on arms projecting from a hub 44 secured to the tumbler shaft 22. A collar 45 is also secured to the tumbler shaft 22 and is provided with a disc 46 having downwardly projecting pins 47 positioned for engagement by a lever 48 (Fig. 2) mounted on a fixed pivot 49 and yieldingly pressed against one or the other of the pins 47 by a relatively heavy coil spring 50.

At its lower end, the tumbler shaft 22 is provided with an eccentric 52 mounted in a transverse slot in a reversing rod 53 by which the direction of travel of the carriage member 11 is controlled.

A pinion 55 is engaged by the rack 16 and is connected through gears 56 and 57 to rotate the shaft 32, previously described. The gear 57 has a square opening therein through which the square portion 35 of the shaft 32 is slidable.

The operation of the mechanism thus far described is as follows:

When the tumbler shaft 22 is held from rotation by one of the stop members 42 or 43, the pins 47 will be in the relative position indicated in Fig. 2, so that one of the pins is under pressure by the lever 48. The overlapping offset arms 40 and 41 move vertically with the bracket 33 and carriage member 11 and eventually reach positions such that the stop member 43 is clear of the lower offset arm 41 and block 39, if the movement is upward, or such that the stop member 42 is clear of the arm 40 and block 38, if the movement is downward.

In either event, as soon as the tumbler shaft 22 is free to move, the lever 48 (Fig. 2) causes an initial angular movement of the shaft 22 sufficient to engage the teeth of the pinion 20 (Fig. 4) with the teeth of the gear 21 (Fig. 3), thereby causing the gear 21 and tumbler shaft 22 to make one-half of a revolution.

Such movement causes the second stop member 42 or 43 to engage the offset overlapping arms 40 and 41 and brings the second depending pin 47 to the operative position shown in Fig. 2, at which point the parts are held by the stop member 42 or 43 until a vertical movement in the opposite direction is completed and the tumbler shaft is

again released. During such vertical movement, the teeth of the pinion **20** rotate idly in one of the toothless recesses of the interrupted gear **21**.

Each half revolution of the tumbler shaft **22** acts through the gears **26, 27, 28, 29** and **30** to move the rack bar **16** slightly to the right in the direction of the arrow *a*, producing a slight bobbin speed reduction. This movement of the rack bar also operates through the gears **55, 56** and **57** to give the upright shaft **32** a slight angular movement, which movement also acts through the right and left-hand threaded portions **36** and **37** to draw the blocks **38** and **39** toward each other, thus shortening the vertical traverse of the carriage **11** and causing the yarn Y on the bobbin B (Fig. 5) to be gradually tapered at both ends of the bobbin.

Furthermore, each half revolution of the tumbler shaft **22** acts through the eccentric **52** to shift the reversing rod **53**, thus causing the carriage **11** to move in the opposite direction.

It will be understood that the pinion **20** on the drive shaft **17** is rotating continuously, while the tumbler shaft **22** is not released at any definite point in a revolution of the pinion **20**. Consequently, when the gear **21** is advanced by the spring **50** and lever **48**, the teeth of the pinion **20** may engage the tops of the teeth on the gear **21** instead of meshing therewith and such engagement may cause breakage of the gear teeth.

To avoid this occurrence I have provided the construction shown in detail in Fig. 4. The gear **21** is keyed to the shaft **22** but is slidable axially thereof. A collar **60** limits upward travel of the gear and a heavy coil spring **61** is mounted on a collar **62** fixed on the shaft **22**, said spring engaging the under side of the gear **21** and forcing the same yieldingly upward against the collar **60**.

If now the teeth of the gears **20** and **21** directly engage instead of meshing in the desired manner, the gear **21** will be forced downward against the pressure of the spring **61** until the teeth slip out of direct engagement into the correct meshing relation. Consequently the breakage of teeth previously experienced is effectually avoided.

Having thus described my invention and the advantages thereof, I do not wish to be limited to the details herein disclosed, otherwise than as set forth in the claim, but what I claim is:—

In a roving frame builder motion, a driving shaft, a driven shaft, reversing cone pulleys and a belt constituting a variable speed drive between said shafts, a belt-shifting device, a tumbler shaft geared to actuate said belt-shifting device, a bevel pinion on said driving shaft, an interrupted bevel gear slidable on said tumbler shaft and intermittently engaged by said bevel pinion, means to stop said tumbler shaft after each half revolution and with said bevel pinion and interrupted bevel gear disengaged, yielding means to turn said bevel gear to position for engagement by said bevel pinion on release of said tumbler shaft from said stopping means, a collar fixed on said tumbler shaft and determining the operative axial position of said bevel gear, a second collar fixed on said tumbler shaft, and a spring on said tumbler shaft positioned between said bevel gear and said second collar and forcing said gear yieldingly against said first collar, said spring thereby maintaining said gear yieldingly in position for engagement by said bevel pinion when said tumbler shaft is released, and said collars taking the entire end thrust of said spring in both directions.

FRED K. HENDRICKSON.