F. R. WURLITZER & F. L. McCORMICK.

DUPLEX TRACKER FOR MUSICAL INSTRUMENTS.

APPLICATION FILED NOV. 1, 1915.

1,240,113.

Patented Sept. 11, 1917.

4 SHEETS—SHEET 1.

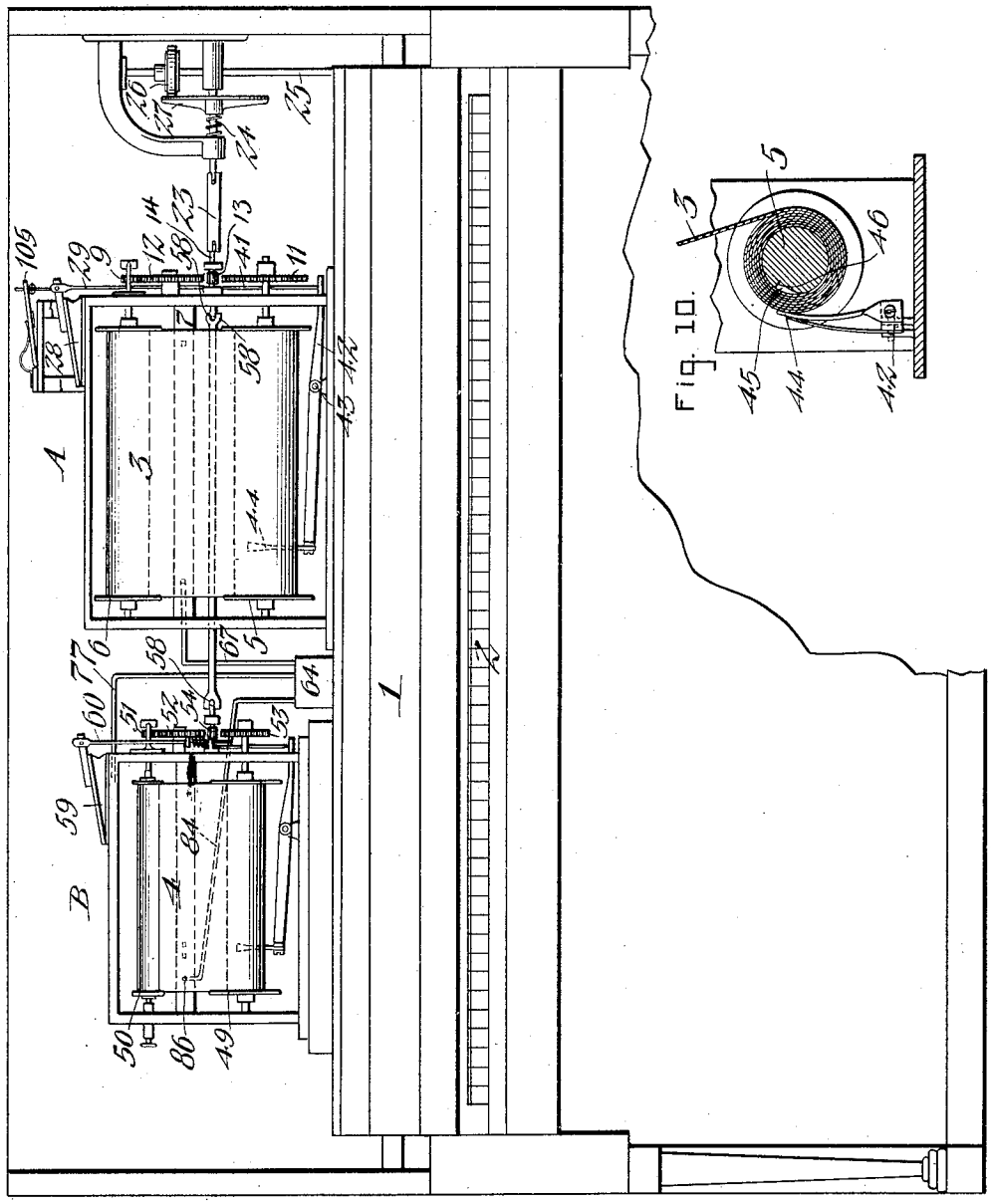

Fig. 1.

Fig. 10.

INVENTORS

Farny R. Wurlitzer,
Frank L. McCormick,
by Geyer & Popp

ATTORNEYS

F. R. WURLITZER & F. L. McCORMICK.

DUPLEX TRACKER FOR MUSICAL INSTRUMENTS.

APPLICATION FILED NOV. 1, 1915.

1,240,113.

Patented Sept. 11, 1917.

4 SHEETS—SHEET 2.

Fig. 2

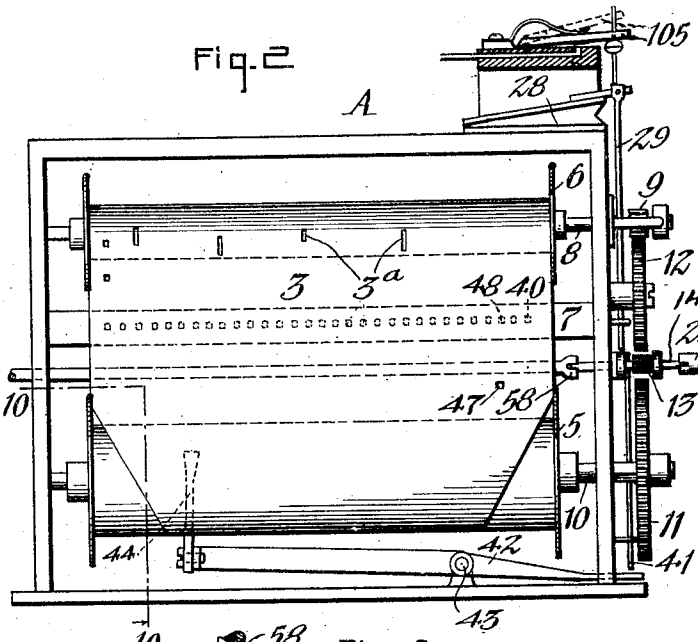

Fig. 3.

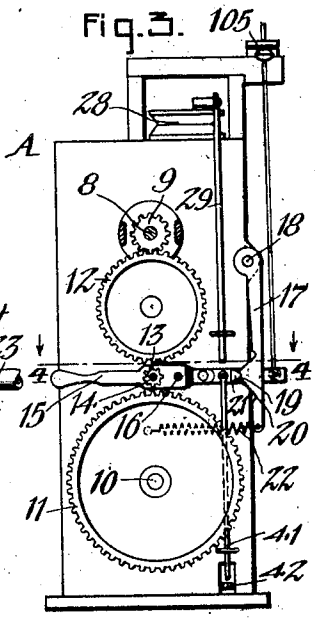

Fig. 4.

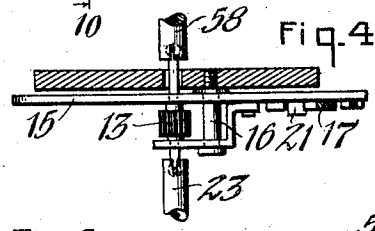

Fig. 5.

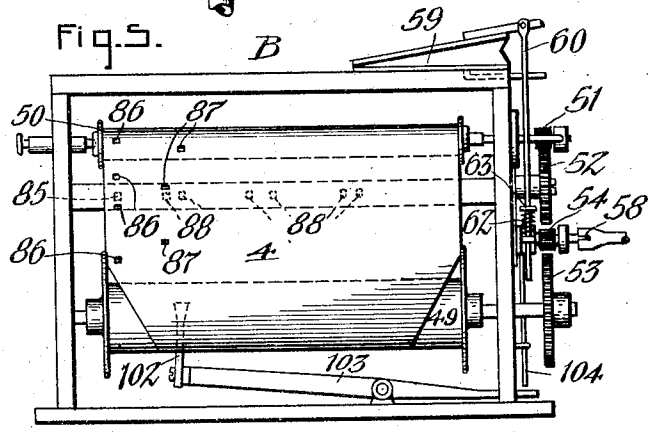

Fig. 6.

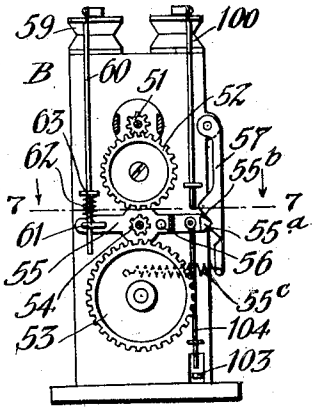

Fig. 7.

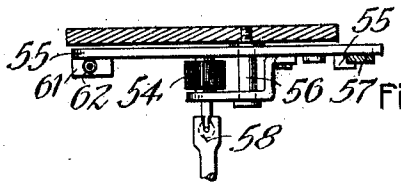

INVENTORS

Fanny R. Wurlitzer

Frank L. McCormick,

BY Geyer & Popp

ATTORNEYS

F. R. WURLITZER & F. L. McCORMICK.

DUPLEX TRACKER FOR MUSICAL INSTRUMENTS.

APPLICATION FILED NOV. 1, 1915.

1,240,113.

Patented Sept. 11, 1917.

4 SHEETS—SHEET 3.

Fig. 6.

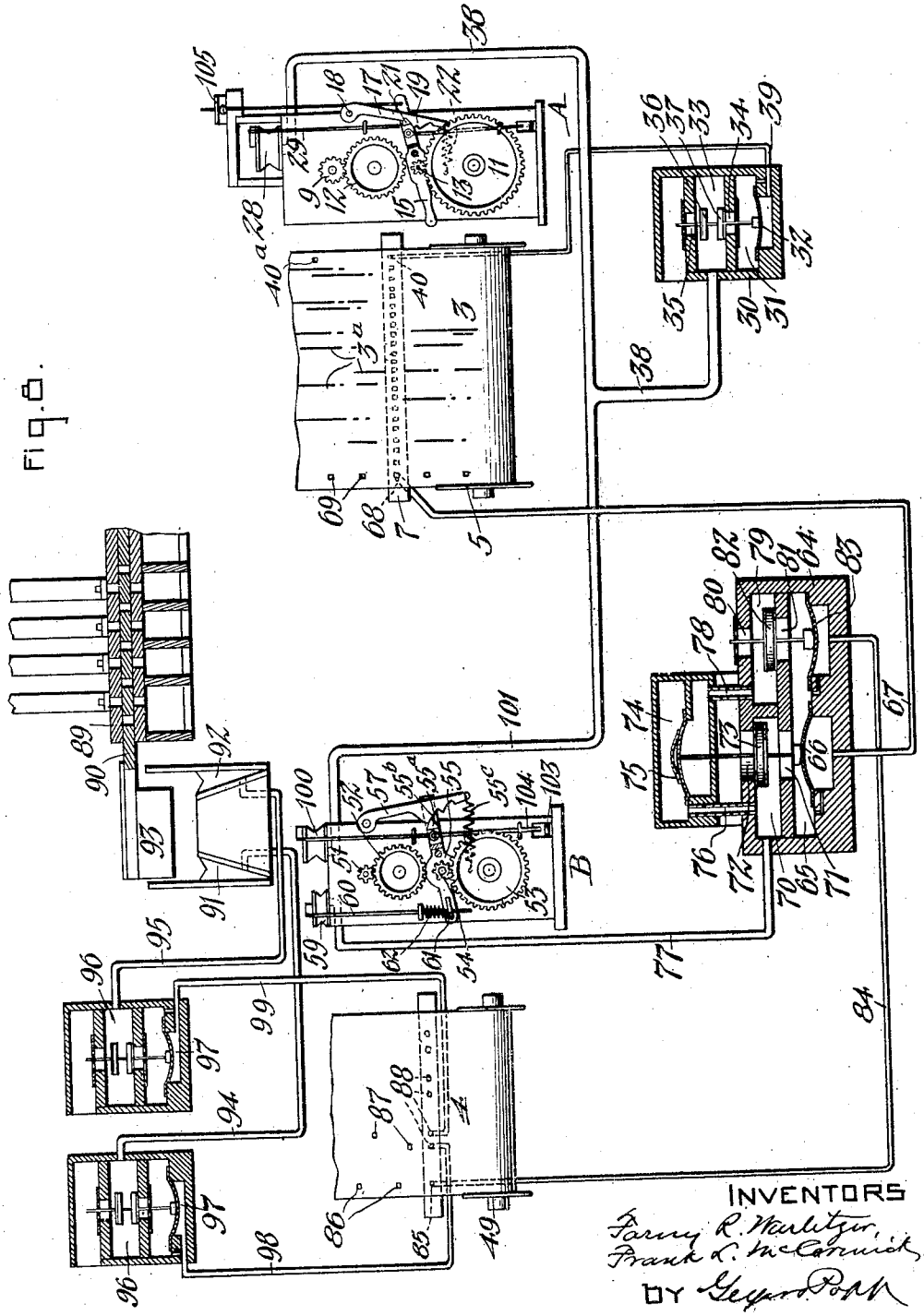

INVENTORS

Harry R. Wurlitzer,
Frank L. McCormick,

BY Geyer & Pohl

ATTORNEYS

F. R. WURLITZER & F. L. McCORMICK.

DUPLEX TRACKER FOR MUSICAL INSTRUMENTS.

APPLICATION FILED NOV. 1, 1915.

1,240,113.

Patented Sept. 11, 1917.

4 SHEETS—SHEET 4.

Fig. 9.

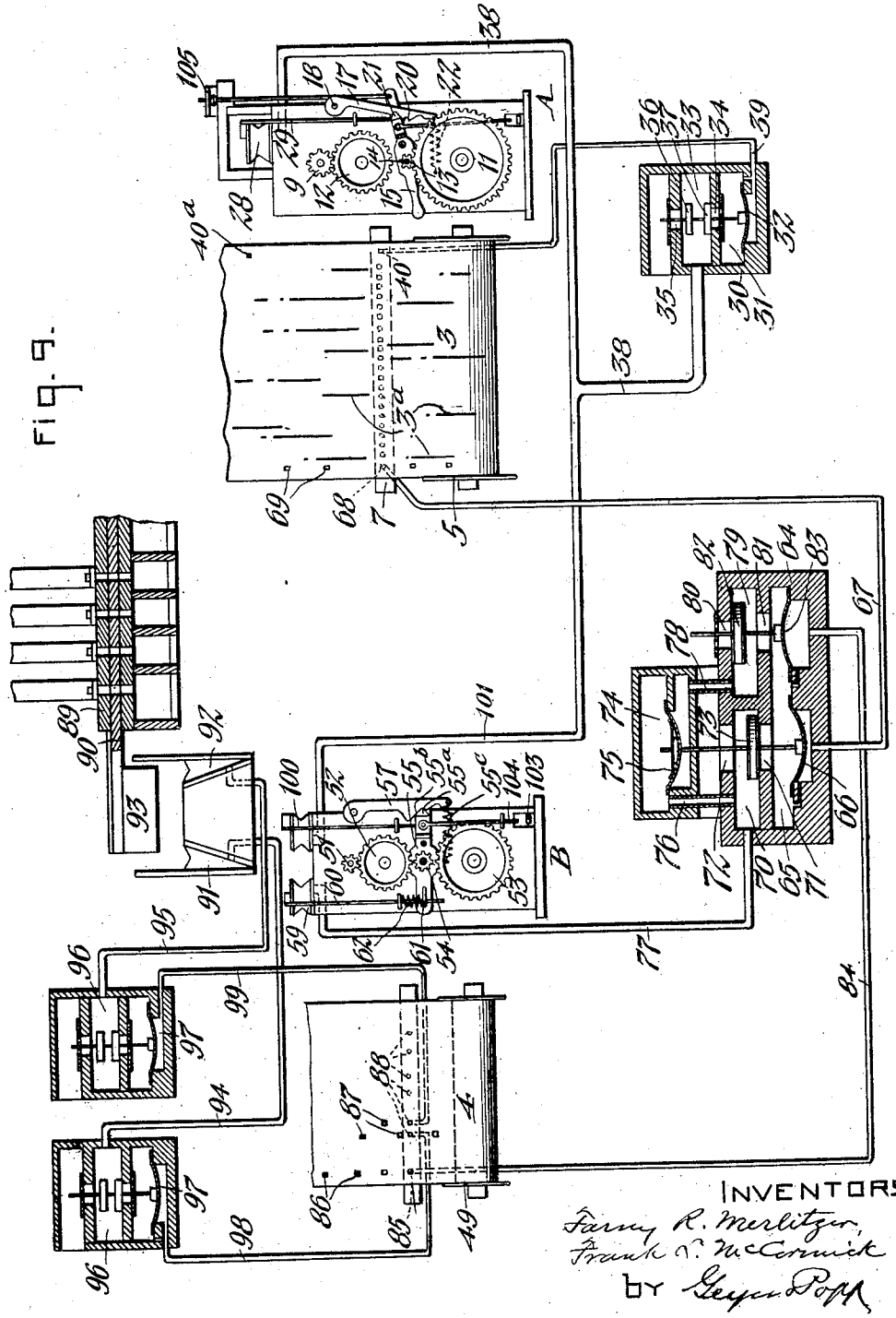

INVENTORS

Harry R. Wurlitzer,
Frank L. McCormick
BY Geyer & Popp

ATTORNEYS

UNITED STATES PATENT OFFICE.

FARNY R. WURLITZER AND FRANK L. McCORMICK, OF NORTH TONAWANDA, NEW YORK, ASSIGNORS TO THE RUDOLPH WURLITZER MANUFACTURING COMPANY, OF NORTH TONAWANDA, NEW YORK, A CORPORATION OF NEW YORK.

DUPLEX TRACKER FOR MUSICAL INSTRUMENTS.

1,240,113. Specification of Letters Patent. Patented Sept. 11, 1917.

Application filed November 1, 1915. Serial No. 58,975.

To all whom it may concern:

Be it known that we, FARNY R. WURLITZER and FRANK L. McCORMICK, citizens of the United States, residing at North Tonawanda, in the county of Niagara and State of New York, have invented new and useful Improvements in Duplex Trackers for Musical Instruments, of which the following is a specification.

This invention relates generally to automatic musical instruments and more particularly to a duplex tracker for organs, orchestrions and similar instruments having pipe-stops and other accessories.

Where such instruments contain a comparatively large number of stops and other parts to be operated automatically, a correspondingly-wide tracker board is ordinarily necessary. It is desirable to keep the music sheets within certain limits as to width, because they swell or shrink more or less under atmospheric changes. The wider the sheet, the greater is its tendency to warp and throw its perforations out of proper registration with the tracker ducts.

The purpose of our invention is the construction of a reliable tracker-mechanism which provides for the operation of a large number of stops or other parts to be actuated from time to time, and yet permits the use of relatively narrow sheets or rolls.

In the accompanying drawings: Figure 1 is a front elevation of an automatic piano embodying the invention. Fig. 2 is an enlarged front view, partly in section, of the tracker frame or box of the note sheet. Fig. 3 is a sectional end view thereof. Fig. 4 is an enlarged fragmentary horizontal section on line 4—4, Fig. 3. Fig. 5 is an enlarged front elevation of the tracker box of the stop-controlling sheet. Fig. 6 is a sectional end view thereof. Fig. 7 is an enlarged fragmentary horizontal section on line 7—7, Fig. 6. Figs. 8 and 9 are diagrammatic views of the apparatus, showing the parts in different positions. Fig. 10 is a cross section on line 10—10, Fig. 2.

Similar characters of reference indicate corresponding parts throughout the several views.

1 indicates the main or action wind chest which in the example shown in the drawings is located above the keyboard 2. Mounted on this chest or otherwise supported, are the tracker boxes or frames A and B of the main or note-sheet 3 and the auxiliary or stop-controlling sheet 4, hereafter termed the "stop-sheet" for brevity. The sheet 3 has the customary note-perforations 3^a. The take-up roll 5, music roll 6 and tracker 7 of the note-sheet are suitably supported in the tracker-box. The spindle 8 of the music roll carries a gear pinion 9 while the spindle 10 of the take-up roll carries a gear wheel 11. The pinion 9 meshes constantly with an idler gear 12 supported on the tracker box below it, and between this idler gear and the take-up gear 11 is interposed a vertically-movable driving pinion 13 which is adapted to engage either of said gears for taking up or rewinding the music sheet in a well-known manner. In the construction shown in the drawings, the shaft 14 of the driving pinion 13 is journaled in a vertically-swinging shifting-lever 15 pivoted at 16 to the adjacent wall of the tracker-box, the parts being so arranged that when this lever is shifted to its central or neutral position, as shown in Figs. 1–6, said pinion 13 is out of engagement with both the idler 12 and the gear wheel 11, allowing the note sheet to remain at rest. Any suitable means may be employed for holding this shifting lever in its different positions. The device shown in the drawings consists of a vertical locking catch 17 pivoted at 18 to the tracker-box and provided on its front side with a V-shaped cam-lug 19 provided in its apex with a notch 20 adapted to interlock with a tooth or projection 21 mounted on the shifting lever 15 on the rear side of its pivot, as shown in Fig. 3, to lock the lever in its neutral position. A spring 22 connected with the free lower end of the locking arm 17 tends to hold the same in engagement with the lever. The inclined upper and lower faces of the lug 19 are adapted to engage respectively against the lower and upper sides of the tooth 21 of the shifting lever, to lock the same in position to drive the take-up roll of the note-sheet, as shown

in Figs. 8 and 9, or to drive the music roll of said sheet.

The pinion shaft 14 is constantly driven during the playing of the instrument from a suitable motor, not shown, and through suitable connections. In the example illustrated in the drawings, this pinion-shaft is connected by a universal shaft or joint 23 with a horizontal shaft 24 which is driven from an upright motor-shaft 25 by friction wheels 26 and 27.

A rewind pneumatic 28 which may be mounted upon the tracker-box A, serves to shift the lever 15 to the proper position to throw the driving pinion 13 into mesh with the idler 12, when the music sheet is fully wound upon the take-up roll, so as to rewind the sheet upon the music roll in the usual manner. For this purpose, the upper movable board of the rewind pneumatic 28 is connected with a vertical thrust rod 29 suitably guided on the tracker-box and having its lower end arranged to trip the rear end of the shifting lever when said pneumatic is collapsed. When this occurs, the tooth 21 of this lever passes below the apex of the V-shaped lug 19 and bears against the lower incline of the latter, thereby locking the lever in this position. The rewind pneumatic is controlled by one of the action units 30 of the wind chest 1, as shown in Figs. 8 and 9. These units may be of conventional construction, 31 indicating the suction chamber containing the usual pouch or primary pneumatic 32; 33 the valve-chamber connected with said suction chamber and the outer atmosphere by ports 34 and 35; 36 and 37 the valves controlling said ports; 38 the conduit leading from said valve chamber to the rewinding pneumatic, and 39 the conduit leading from the underside of the pouch to a corresponding rewind duct 40 in the tracker board of the note-sheet 3.

When the invention is embodied in a coin controlled instrument driven by an electric motor whose circuit is broken by the discharge of a deposited coin, means are preferably provided for automatically advancing the note sheet to a limited extent, after rewinding it, in order to operate the customary coin-trip and stop the instrument. In the construction shown, this forward movement of the sheet is effected by a vertical rod 41 pivoted at its upper end to the rear arm of the shifting lever 15 and having its lower end arranged to be engaged by one arm of a vertically-swinging trip lever 42 pivoted at 43 to the tracker box and carrying at its inner end a spring-pressed finger 44 pivoted to swing at its free upper end toward and from the take-up roll. As shown in Fig. 10, the latter is provided in its periphery in line with said finger, with a circumferential recess 45, adapted to receive the finger and provided at its rear end with an abrupt shoulder 46 which bears against the free end of the finger and depresses it when the last convolution of the note-sheet is unwound from the take-up roll. By the depression of the finger, the long arm of the trip lever 42 is lowered and its short arm raised, thereby swinging the rear arm of the shifting lever 15 in the same direction through the lower thrust rod 41 and swinging the driving pinion 13 into mesh with the gear 11 of the take-up roll. The note-sheet is thereupon again wound upon this roll until a stop-perforation 47 of the sheet registers with a corresponding duct 48 of the tracker. This duct controls the operating pneumatic of any suitable or well-known coin-controlled switch located in the motor circuit. This pneumatic and switch form no part of our present invention and are therefore not illustrated in the drawings.

The tracker-box B of the stop-sheet 4 and the driving gears of its take-up roll 49 and rewind roll 50 are practically identical with the corresponding parts of the note-sheet tracker A, except that inasmuch as this sheet is moved intermittently and remains at rest for different periods, it may be shorter than the note-sheet and its rolls may be of correspondingly smaller dimensions, as shown. 51 indicates the pinion on the spindle of the rewind roll of tracker B; 52 the idler with which it meshes; 53 the gear on the shaft of the take-up roll; 54 the driving pinion corresponding to the pinion 13 of the tracker A, and 55 the shifting lever carrying said pinion and pivoted to the tracker box at 56. This lever is locked in its various positions by a catch 57 similar to the catch 17 of tracker A.

The shaft of the driving pinion 54 is coupled to the corresponding pinion shaft of the tracker A by a universal shaft or joint 58 or any other suitable means, by which construction both of said pinions are simultaneously driven from the motor shaft.

59 indicates a starting or take-up pneumatic mounted on the tracker B and serving to swing the shifting lever 55 in the proper direction to throw the driving pinion 54 into gear with the wheel 53 of the take-up roll 49, so as to take-up or advance the stop-sheet when said pneumatic is collapsed. Motion is transmitted from the upper movable board of the starting pneumatic to the shifting lever 55 preferably by a thrust rod 60 pivoted thereto and having its lower end arranged in a suitable guide 61 on said lever, a spring 62 being interposed between the upper side of this guide and a collar 63 fixed to the thrust rod. When said shifting lever is depressed, its tooth 55^a rides up on the lower incline 55^b

of the locking catch 57, thus straining its spring 55ᶜ, as shown in Fig. 8. When the pneumatic 59 is flushed, the thrust rod 60 connected therewith is withdrawn from the front arm of said shifting lever and the latter being released, is returned to the neutral position shown in Fig. 9, by the reaction of the spring 55ᶜ and the pressure of said incline against the tooth 55ᵃ; thereby arresting the stop-sheet. The collapse of the pneumatic 59 for starting this sheet is controlled by the note-sheet 3, while the flushing of said pneumatic for arresting the stop-sheet is preferably controlled by the latter, although this flushing action may also be controlled by the note-sheet, if desired. Any suitable controlling mechanism may be associated with the perforated sheets for this purpose, but I prefer to employ the mechanism shown in the drawings, which is constructed as follows:

Referring to Figs. 8 and 9, 64 indicates a wind chest containing a suction chamber 65 from which the air is constantly exhausted during the action of the instrument and in which is arranged a pouch or primary pneumatic 66 of ordinary construction. To the underside of this pouch leads a conduit 67 connected with a starting duct 68 in the tracker of the tracker box A. This duct coöperates with a row of starting perforations 69 in the note-sheet 3. Located above the suction chamber 65 is a valve-chamber 70 connected with the suction chamber by a port 71 and with the atmosphere by an opposing port 72, these ports being controlled by a double-faced valve 73 of ordinary construction, which is actuated by the pouch 66. The stem of this valve extends upwardly into an auxiliary pouch-chamber 74 containing a pouch 75 to which the upper end of said stem is attached. The compartment of this auxiliary pouch chamber above the pouch, communicates with the valve-chamber 70 by a conduit or passage 76, so that when the valve 73 is raised to open the suction port 71 and close the flushing port 72, as shown in Fig. 8, said compartment is placed in communication with the suction chamber, thereby retaining the valve in that position. The starting pneumatic 59 communicates with the valve chamber 70 by a conduit 77. The lower compartment of the auxiliary pouch chamber 74 communicates by a conduit 78 with a second or auxiliary valve chamber 79 arranged beside the chamber 70. This valve chamber communicates with the atmosphere by a port 80 and with the suction chamber 65 by a port 81, these ports being controlled by a valve 82 actuated by a pouch 83. The chamber beneath the last-named pouch is connected by a conduit 84 with a sheet-stopping or arresting duct 85 in the tracker of the tracker-box B. With this stopping-duct coöperates a row of stopping or arresting perforations 86 in the corresponding sheet 4.

By this construction, when one of the starting perforations 69 of the note-sheet registers with the corresponding duct, the starting valve 73 is raised to the position shown in Fig. 8, placing the starting pneumatic 59 in communication with the suction chamber 65 and collapsing it, with the result that the driving pinion 54 is lowered into engagement with the gear 53 of the take-up roll 49 and the stop-sheet is wound upon the latter. In this raised position of said valve, the stopping valve 82 remains lowered and the compartment below the auxiliary pouch 75 is therefore flushed while the compartment above it is exhausted, thus retaining the valve 73 in its raised position, keeping the pneumatic 59 collapsed and holding the driving pinion 54 in engagement with the gear of said take-up roll. Under these conditions, the stop-sheet 4 continues to advance until its next stopping perforation 86 registers with the corresponding duct of its tracker, whereupon the stopping valve 82 is raised, as shown in Fig. 9, placing the lower compartment of the auxiliary pouch chamber 74 in communication with the suction chamber 65, and cutting off the atmosphere therefrom. As the pressure on both sides of the auxiliary pouch 75 is now balanced, the starting valve drops to the position shown in Fig. 9, flushing and inflating the pneumatic 59. The thrust rod 60 is thereby withdrawn from the shifting lever 55 which is thereupon swung up to its neutral position by the spring-actuated catch 57, as hereinbefore described, arresting the stop-sheet. It will thus be understood that whenever one of the starting-perforations 69 of the note-sheet passes the corresponding tracker, the stop-sheet 4 is caused to advance, while when one of the stopping perforations 86 of the stop-sheet passes over the corresponding tracker, said sheet is promptly stopped, the latter advancing intermittently in this manner throughout the playing of the composition. The stop-sheet is cut with rows of suitably arranged perforations 87 representing pipe-stops or other parts to be thrown into and out of action from time to time during the playing of the instrument. These pipe-stop perforations coöperate with corresponding tracker-ducts 88 which control suitable pneumatic or other action-units which in turn control the pipe-stops. In the example shown in the drawings, 89 indicates the pipe-stop and 90 its slide or register which is actuated by a pair of opposing shifting pneumatics 91, 92, the movable boards of which engage opposite ends of a lug 93 of the slide. These shifting devices which are commonly termed "on" and "off" pneumat-

ics, are respectively connected by conduits 94, 95 with the valve chambers 96 of action-units of the wind chest, which may be identical with the unit 30 and therefore require no further description. The pouch-chambers 97 of said units are respectively connected by conduits 98, 99 with the pipe-stop ducts 88, the corresponding perforations 87 being so disposed that when a perforation of one row passes the tracker, the corresponding pipe-stop is thrown on or into action, while when a perforation in the other row passes the tracker, the stop is thrown off. As is common in such stop-actions, after a stop-slide 90 has been shifted to "on" position by the pneumatic 91, it remains there until thrown to "off" position by the oppositely-acting pneumatic 92.

The stopping perforations 86 are preferably so arranged that the stop-sheet, after having been advanced to throw a certain stop or stops on or off, is arrested just before the next set of "on" or "off" perforations reach the corresponding tracker ducts, as best shown in Fig. 2, thus preparing the stop-controlling perforations for prompt action and requiring a comparatively short step of the sheet to operate the stops.

In addition to the starting pneumatic 59, the tracker-box B is provided with a rewind pneumatic 100 corresponding to the rewind pneumatic 28 of the tracker-box A and serving to move the shifting lever 55 to rewind position when the stop-sheet is fully wound upon its take-up roll. The rewind pneumatic 100 is connected with the conduit 38 of the rewind pneumatic 28 by a branch 101, whereby both sheets are simultaneously rewound. The tracker-box B is also provided with a trip-finger 102, lever 103 and thrust rod 104, corresponding to the parts 44, 42 and 41 of the tracker box A.

Such automatic instruments are commonly provided with a suitable cut-off slide or valve for disconnecting the action wind chest from the main suction bellows (not shown) during the rewinding of the note sheet. This cut-off valve forms no part of our present invention and is not illustrated in the drawings. It is usually controlled by an ordinary pallet or valve 105 which may be connected with the shifting lever 15 in such manner that the pallet is fully opened and caused to effect the opening of the cut-off valve when said lever is depressed, while when the lever is raised to rewind the sheet, the pallet is allowed to close to effect the closing of the cut-off valve.

The operation of the duplex tracker is as follows:

When both sheets are at rest, the shifting lever 15 of the tracker-box A is in its depressed position ready to take up the note-sheet, while the shifting lever 55 of tracker-box B is in neutral position, as shown in Fig. 9. Upon starting the motor of the instrument, the driving pinions 13 and 54 are constantly rotated and the note-sheet is wound upon its take-up roll in the customary manner. When a starting perforation 69 of the note sheet passes over its tracker, the starting valve 73 is raised, as hereinbefore described, collapsing the starting pneumatic 59 of the tracker-box B, throwing the driving pinion 54 into gear with the take-up roll 49 and winding the stop-sheet 4 thereon. This sheet now advances until a pipe-stop perforation 87 or a set of such perforations passes the coresponding tracker and the next set of such perforations has nearly reached the tracker, when a stopping perforation 86 of said sheet registers with the tracker, flushing the pneumatic 59, moving the driving pinion 54 to neutral position (Fig. 9), and arresting the stop-sheet. The pipe-stop or stops thrown on by this movement of the stop-sheet, remain in action until that sheet is again advanced by the action of another starting perforation 69 of the note-sheet, sufficiently to bring the next set of "off" perforations over the tracker, when the slides 90 of said stops are shifted to "off" position, as hereinbefore described, and so on throughout the playing of the note-sheet.

After the stop-sheet has been fully wound upon its take-up roll, the rewind perforation 40^a registers with the tracker-duct 40, collapsing both rewind pneumatics 28 and 100 and causing the two sheets to be rewound. As the stop-sheet is shorter than the note-sheet, it will be rewound ahead of it. As soon as the stop-sheet is rewound, the shifting lever 55 is moved to neutral position by the action of the trip finger 102, thus stopping said sheet, while the rewinding of the longer note-sheet continues. When the latter has been rewound, the corresponding trip-finger 44 causes the shifting lever 14 to be returned to playing position preparatory to stopping the instrument by the coin-controlled device hereinbefore mentioned.

By using two or more separate sheets, one for playing the notes and the other or others for throwing the pipe-stops or equivalent parts on and off, a large number of perforations for controlling such parts are available, without unduly widening the sheets, enabling the latter to be made so narrow as not to swell or shrink to an objectionable degree under atmospheric or climatic changes.

As the stop-sheet does not travel constantly and synchronously with the note-sheet, but advances intermittently under the control of the note-sheet, a more precise and satisfactory action of the stop-sheet is secured than would be the case if both sheets were propelled to move in unison.

We claim as our invention:

1. An apparatus of the character de-

scribed, comprising a perforated main or note sheet, a perforated auxiliary sheet for controlling pipe-stops and the like, trackers associated with said sheets, driving means for the auxiliary sheet controlled by the main sheet, and stopping means for the auxiliary sheet controlled by itself.

2. An apparatus of the character described, comprising a main tracker having note ducts and a controlling duct adapted to coöperate with a main or note sheet having corresponding perforations, an auxiliary tracker having stop-controlling ducts and a sheet-arresting duct adapted to coöperate with an auxiliary sheet having corresponding perforations, rolls for said auxiliary sheet, driving mechanism for said rolls, a take-up pneumatic controlling said driving mechanism, means for exhausting said pneumatic controlled by the controlling duct of the main tracker, and means for flushing said pneumatic controlled by the sheet-arresting duct of the auxiliary tracker.

3. An apparatus of the character described, comprising a main tracker having note ducts and a controlling duct, an auxiliary tracker having stop-controlling ducts and a sheet-arresting duct, rolls for said auxiliary sheet, driving mechanism for said rolls, a take-up pneumatic controlling said driving mechanism, a valve-chamber connected with said pneumatic and having suction and flushing ports, a valve controlling said ports, a primary pneumatic controlling said valve and connected with the controlling duct of the main tracker, a retaining pouch also acting on said valve to hold it in position to exhaust said take-up pneumatic, the compartment on one side of said pouch communicating with said valve chamber, a second valve chamber in communication with the compartment on the opposite side of said pouch and having suction and flushing ports, a valve controlling the last-mentioned ports, and a primary pneumatic controlling the last-named valve and connected with the sheet-arresting duct of said auxiliary tracker.

4. An apparatus of the character described, comprising main and auxiliary trackers adapted to coöperate with separate perforated sheets, a pair of rolls for each sheet, driving mechanism for each pair of rolls, a rewind pneumatic coöperating with each of said driving mechanisms, and means under the control of one of said trackers, for simultaneously exhausting said rewind pneumatics.

5. An apparatus of the character described, comprising a main tracker having note ducts and a controlling duct, an auxiliary tracker having stop-controlling ducts and a sheet-arresting duct, rolls for said auxiliary sheet, driving mechanism for said rolls including a shiftable member for transmitting motion to one or the other of said rolls, means tending to move said shiftable member to neutral position, a pneumatic controlling said shiftable member, and means for collapsing said pneumatic including the controlling duct of the main tracker.

6. An apparatus of the character described, comprising a main tracker having note ducts and a controlling duct, an auxiliary tracker having stop-controlling ducts and a sheet-arresting duct, rolls for said auxiliary sheet, driving mechanism for said rolls including a shifting lever carrying a gear wheel for imparting motion to one or the other of said rolls, a catch having a cam arranged to move said lever to neutral position, a spring acting on said catch, a pneumatic arranged to move said lever for driving the take-up roll, and means for collapsing said pneumatic including the controlling duct of the main tracker.

FARNY R. WURLITZER.
FRANK L. McCORMICK.

Copies of this patent may be obtained for five cents each, by addressing the "Commissioner of Patents, Washington, D. C."