March 29, 1960 B. M. GORDON ET AL 2,931,000

HIGH PRECISION ELECTRICAL RESISTOR DEVICE WITH MINIMIZED INDUCTANCE

Filed April 26, 1956

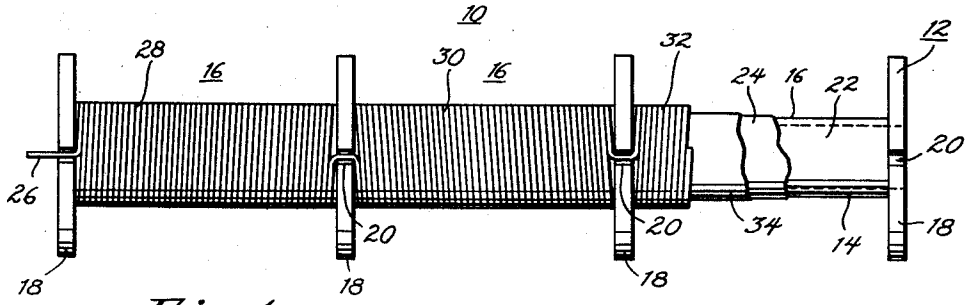

Fig. 1.

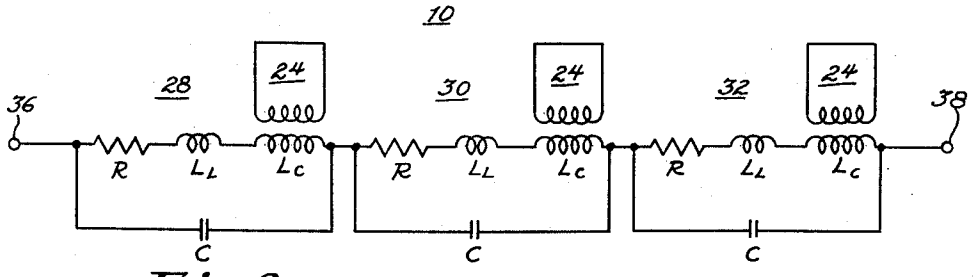

Fig. 2.

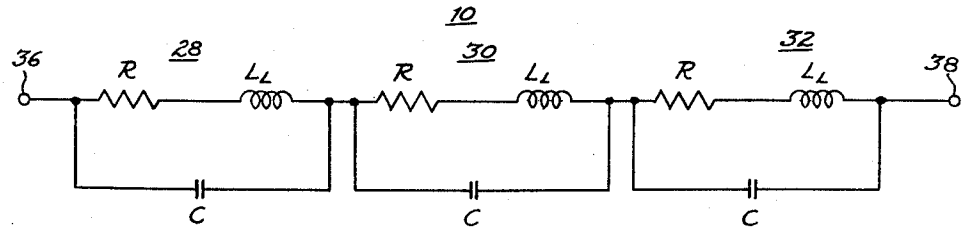

Fig. 3.

INVENTORS.
BERNARD M. GORDON
ROBERT P. TALAMBIRAS
BY Jacob Trachtman
ATTORNEY.

United States Patent Office 2,931,000
Patented Mar. 29, 1960

2,931,000

HIGH PRECISION ELECTRICAL RESISTOR DEVICE WITH MINIMIZED INDUCTANCE

Bernard M. Gordon, Newton, and Robert P. Talambiras, Cambridge, Mass., assignors to Epsco, Incorporated, Boston, Mass., a corporation of Massachusetts

Application April 26, 1956, Serial No. 580,779

2 Claims. (Cl. 338—62)

The invention relates to an electrical resistor device, and more particularly to an electrical resistor device of the wire wound type with minimized inductance.

Heretofore, resistor devices have been produced formed of a wire strand which is coiled about a core body. Such devices have been used in making high precision resistors with high heat dissipation and power ratings. Because of their construction, such resistors, however, have an electrical inductance which in many cases is not desirable. In order to minimize the inductive effect of the windings, such prior art devices have utilized adjacent coil sections which are wound in opposite directions. However, because of the low coupling attained between such sections, this method has not been able to reduce the inductance to the degree desired. With the development of the electronic art, such residual inductance made these resistors unsatisfactory, especially for use in computers and other devices utilizing pulses of short duration and high frequency.

A principal object of the invention is to provide a new and improved electrical resistor device of the wire wound type with a minimized inductance.

Another object of the invention is to provide a new and improved electrical resistor device of the wire wound type which is simple and inexpensive in construction and minimizes inductance.

Another object of the invention is to provide a wire wound electrical resistor device which is highly efficient in operation and maintains substantially all the advantages of a wire wound resistor, while having its inductance minimized.

The above objects as well as many other objects of the invention are achieved by providing a wire wound resistor provided with a closely coupled short circuited secondary winding. The secondary winding short circuits the coupled inductance of the resistor coil leaving a minimized effective inductance due to the leakage flux. The leakage flux may be further reduced by providing the resistor with adjacent coil sections wound in opposite directions so that their leakage inductances are in opposed relationships. The increased capacitance due to the close coupling of the resistor winding with the secondary winding is of reduced effectiveness, since the capacitances of each of the coil sections are connected in series with each other.

Because the winding capacitance of low resistance wire wound devices is usually negligible, the increased capacitance due to the secondary winding is also negligible, while the decrease in the inductance of the device is appreciable and important.

The invention will be most readily understood from the following detailed description of a representative embodiment thereof, reference for this purpose being had to the accompanying drawings, in which:

Figure 1 is a side elevational view of a wire wound resistor device embodying the invention and having parts broken away,

Figure 2 illustrates in schematic form the resistor device shown in Figure 1, and

Figure 3 illustrates in schematic form an equivalent diagram of the effective parameters of the resistor device represented by Figure 2.

Like reference numerals designate like parts throughout the several views.

The Figure 1 discloses an electrical resistor device **10** of the wire wound type embodying the invention.

The resistor device **10** comprises a supporting or core body **12** having a hollow cylindrical portion **14** forming sections **16** separated and terminated by disc portions **18**. The disc portions **18** may be provided with interconnecting slots **20**. The core body **12** is preferably made of an electrical insulating material.

Each of the sections **16** of the core body **12** has an outer cylindrical surface **22**. These surfaces **22** are adjacently positioned and coaxially displaced from each other, and are separated by the discs **18**.

Each of the outer surfaces **22** of the sections **16** is provided with a layer or coating **24** of an electrically conductive material such as silver. The coating **24** may be applied by painting, spraying, or by any of the other well known means. The coatings **24** of the respective sections **16** are electrically insulated from each other by the disc portions **18** of the core device **12**.

An electrical resistance element **26** which may be of the wire type commonly used, is wound about the respective sections **16** to produce resistor coils **28, 30, 32**. The resistor coil **28** may be formed by passing the wire element **26** in the clockwise direction about the outer surface **22** of the end section **16** over its coating **24**. The element **26** can then be passed through the communicating slot **20** of the disc portion **18** to form the coil **30** by being wound in the counter-clockwise direction about the cylindrical outer surface **22** of the intermediate section **16** over its conductive coating **24**. In a like manner, the next adjacent or end resistor coil **32** may be formed by passing the element **26** through the communicating slot **20** of the disc **18** and winding it in the clockwise direction about the outer surface **22** of the section **16** over its conductive coating **24**. By this process, a resistor device can be formed with any desired member of coil sections.

In order to prevent short circuiting of the resistor element **26** between its turns, it may be provided with the usual insulating coating. If it is desired to provide additional insulation between the resistor coils **28, 30, 32** and their conductive coatings **24**, an intermediate electrical insulating coating **34** may be provided over each of the conductive layers **24**. Such an insulating coating **34**, however, should be made as thin as possible to minimize the separation between the conductive coatings **24** and their resistor coils **28, 30, 32**, while still providing the desired electrical insulation.

Refer to Figure 2 which illustrates in schematic form the electrical resistor device **10** which comprises the resistor coils **28, 30, 32** connected in series between the input and output terminations **36** and **38**. Each of the resistor coils **28, 30, 32** are effectively the primary winding of a transformer and may be represented by a resistance component R, leakage inductance component L_1 and a coupled inductance component L_c which is coupled with the secondary winding formed by the conductive layer **24**, and the capacitance C between the windings of the resistor coils.

It is noted that the coupled inductance L_c is increased and the leakage inductance is reduced or minimized as the coupling of each of the resistor coils **28, 30, 32** is increased with its conductive layer **24**. With the increase in the proximity and coupling between the coils and their conductive coatings **24**, the capacitance C between the turns of the windings **28, 30, 32** also increases. The increase in this capacitance, however, is negligible since the

respective capacitances C of each of the resistor coils are connected in series (see Figures 2 and 3), reducing the value of the total capacitance between the terminals **36, 38.**

The Figure 3 is an equivalent representation of the schematic diagram of Figure 2. Since the secondary windings **24** are short circuited, this has the effect of eliminating the coupled inductances L_c as shown in the circuit of Figure 3. The remaining representation for each of the coils **28, 30, 32** comprises a resistor component R connected in series with the leakage inductance L_l which is bridged by the capacitance C of the resistor coil. It is noted that the leakage inductance L_l is minimized by the effect of the oppositely wound adjacent coils **28, 30, 32.** This arrangement results in the leakage inductance flux of each coil counteracting that of the next adjacent coil, and further minimizes the effective inductance of the device **10.**

The wire wound resistor device **10** embodying the invention is highly effective in minimizing the inductive component by utilizing the shorted secondary winding which is closely coupled with a primary winding formed by its resistor coil. It is particularly noted that the resistor coils **28, 30, 32,** without the secondary shorting layers **24,** are ineffective for achieving the desired minimized inductance when merely wound in opposite directions. This is because the mutual inductance between the adjacent coils, because of their positioning and other such factors, cannot be made sufficiently high to produce the desired results. This device, however, does utilize this effect to further minimize the leakage inductance to the limited extent afforded by this technique.

The wire wound resistor device **10** is particularly useful for low values of resistance up to ten thousand ohms where its inductance to resistance ratio is greater than the product of its resistance and capacitance. Of course, the many applications of such a resistor device and the advantages of using a resistor with minimized inductance will be evident to those skilled in the electrical art.

While this invention has been described and illustrated with reference to a specific embodiment, it is to be understood that the invention is capable of various modifications and applications, not departing essentially from the spirit thereof, and which will become apparent to those skilled in the art.

What is claimed is:

1. An electrical resistor device with minimized inductance comprising an insulator core body having a plurality of separate adjacent coaxially displaced cylindrical outer surfaces each adapted to receive a resistor winding thereabout, each of said outer surfaces of said core body being provided with an electrically conductive coating forming a low resistance secondary winding, said coatings being electrically insulated from each other, and an electrical resistance wire element forming series connected primary windings wound respectively about said outer surfaces of said body over their said conductive coatings and inductively coupled with said secondary windings for minimizing the inductance of said device, said resistance element being electrically insulated from and unconnected with said conductive coatings, each of the windings of said resistance element being wound in a direction counter to the direction of its adjacent windings.

2. An electrical resistor device with minimized inductance comprising an insulator core body having a plurality of separate adjacent coaxially displaced cylindrical outer surfaces each adapted to receive a resistor winding thereabout maximizing the mutual inductance of said windings, each of said outer surfaces of said core body being provided with an electrically conductive metallic coating forming a shorted secondary winding for minimizing inductance of the device, said coatings being electrically insulated from each other, and an electrical resistance wire element forming series connected windings wound respectively about said outer surfaces of said body over their said conductive coatings, said resistance element being electrically insulated from and unconnected with said conductive coatings, said windings being closely positioned over their said conductive coatings to maximize their magnetic coupling and minimize leakage inductance, each of the windings of said resistance element being wound in a direction counter to the direction of its adjacent windings to counteract and minimize the leakage inductance of said windings, the capacitance of each of said windings being effectively in series to minimize the total capacity of the device.

References Cited in the file of this patent

UNITED STATES PATENTS

2,265,821	Siegel	Dec. 9, 1941
2,518,225	Dorst	Aug. 8, 1950