US 20020041608A1

(19) **United States**

(12) **Patent Application Publication** (10) **Pub. No.: US 2002/0041608 A1**

Choi et al. (43) **Pub. Date: Apr. 11, 2002**

(54) **DIGITAL TELEVISION SYSTEM**

(75) Inventors: **In Hwan Choi**, Seoul (KR); **Young Mo Gu**, Seoul (KR); **Kyung Won Kang**, Seoul (KR); **Kook Yeon Kwak**, Kyonggi-do (KR)

Correspondence Address:
Jonathan Y. Kang, Esq.
Lee & Hong P.C.
11th Floor
221 N. Figueroa Street
Los Angeles, CA 90012-2601 (US)

(73) Assignee: **LG Electronics Inc.**

(21) Appl. No.: **09/962,263**

(22) Filed: **Sep. 26, 2001**

(30) **Foreign Application Priority Data**

Sep. 26, 2000 (KR) 2000-56473

Publication Classification

(51) **Int. Cl.**[7] **H04J 3/18**

(52) **U.S. Cl.** **370/535**; 370/477

(57) **ABSTRACT**

Disclosed is a digital television system carrying out modulation/demodulation by VSB(vestigial side band) . A VSB transmitter includes an additional error correction encoder designed in a manner that a signal mapping of a TCM encoder is considered, a multiplexer(MUX), a TCM encoder operating in a manner corresponding to state transition processes of the additional error correction encoder, and a signal transmission part including an RF converter. And, A VSB receiver includes a signal receiver part receiving a signal transmitted from the transmitter, a TCM decoder, a signal processing part including a derandomizer, and an additional error correction decoder part.

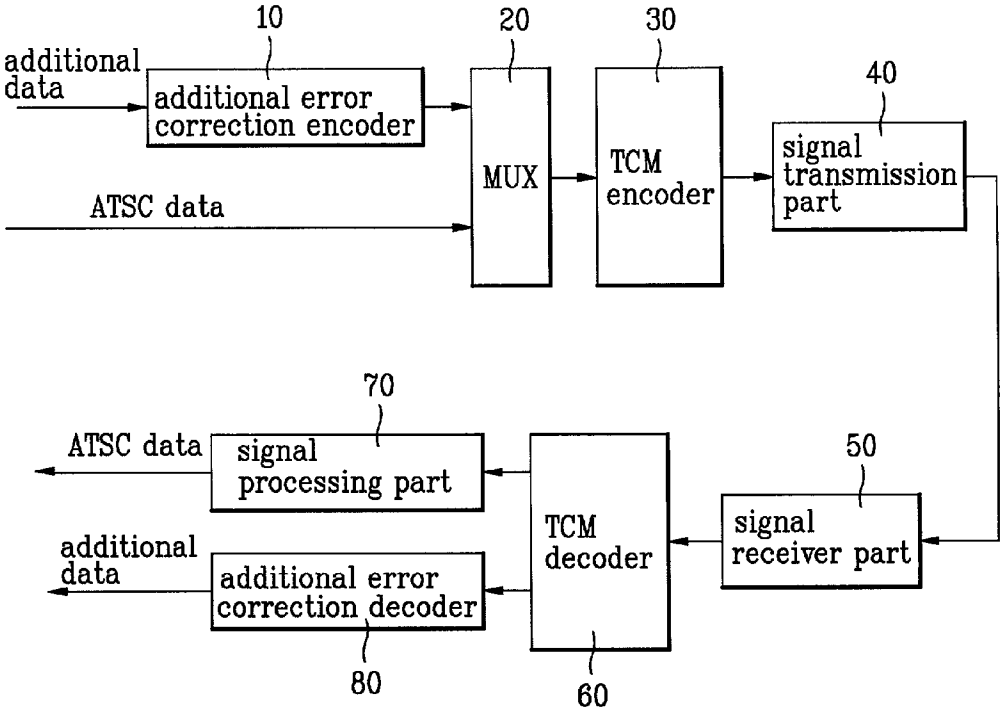

FIG 1

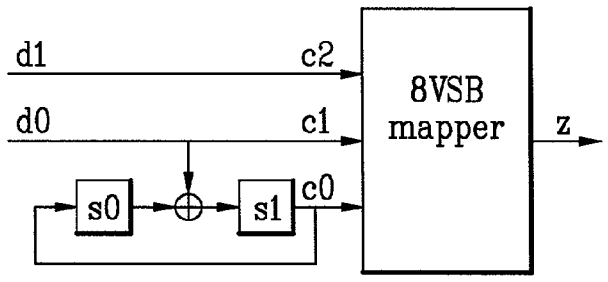

c2c1c0	z
000	−7
001	−5
010	−3
011	−1
100	+1
101	+3
110	+5
111	+7

FIG 2

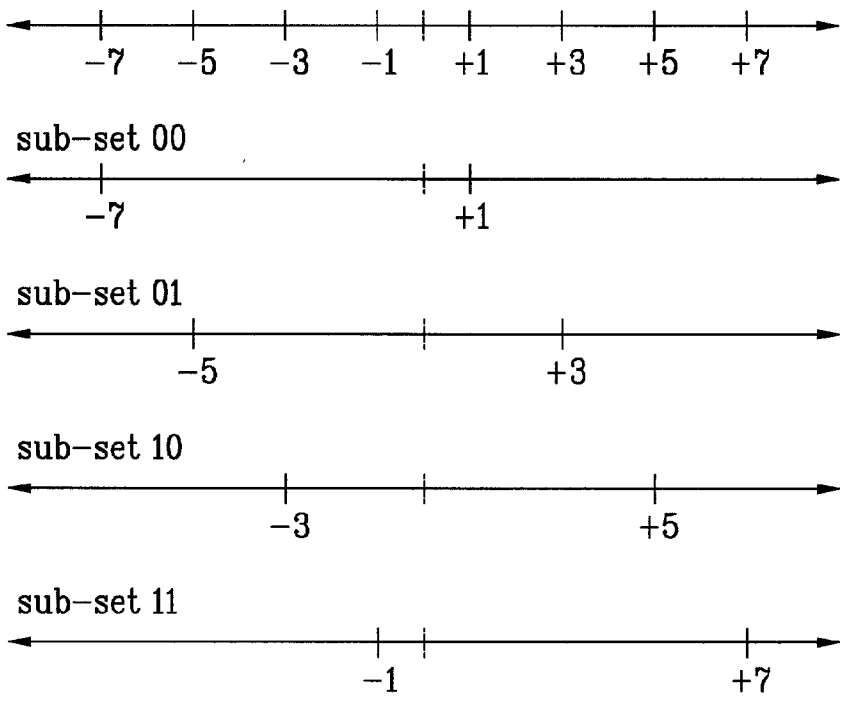

FIG. 3

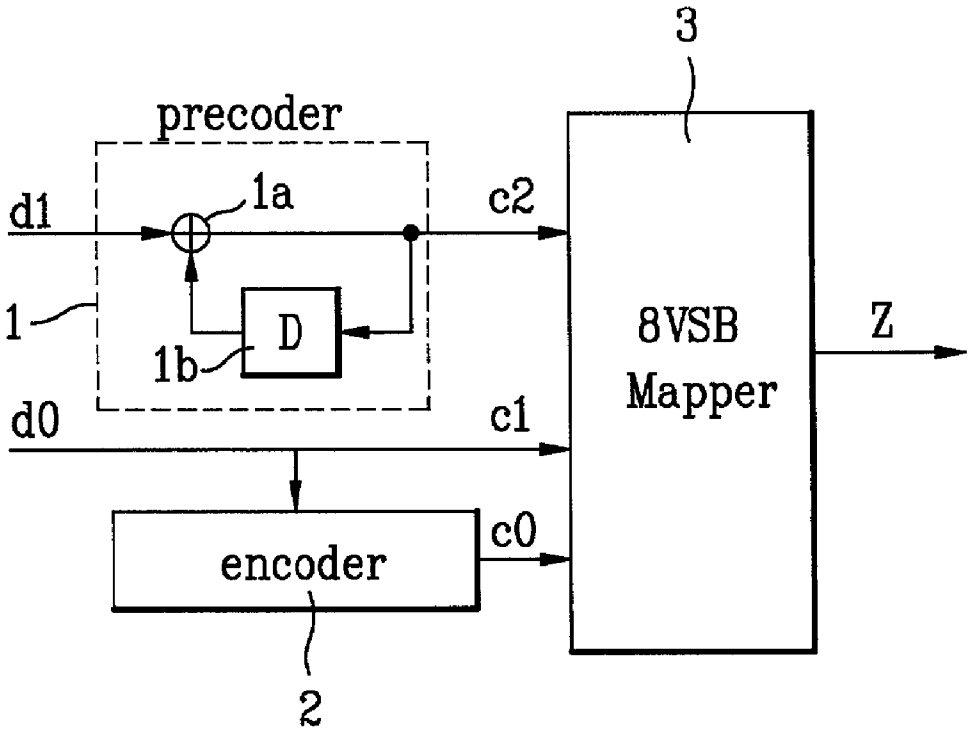

FIG. 4

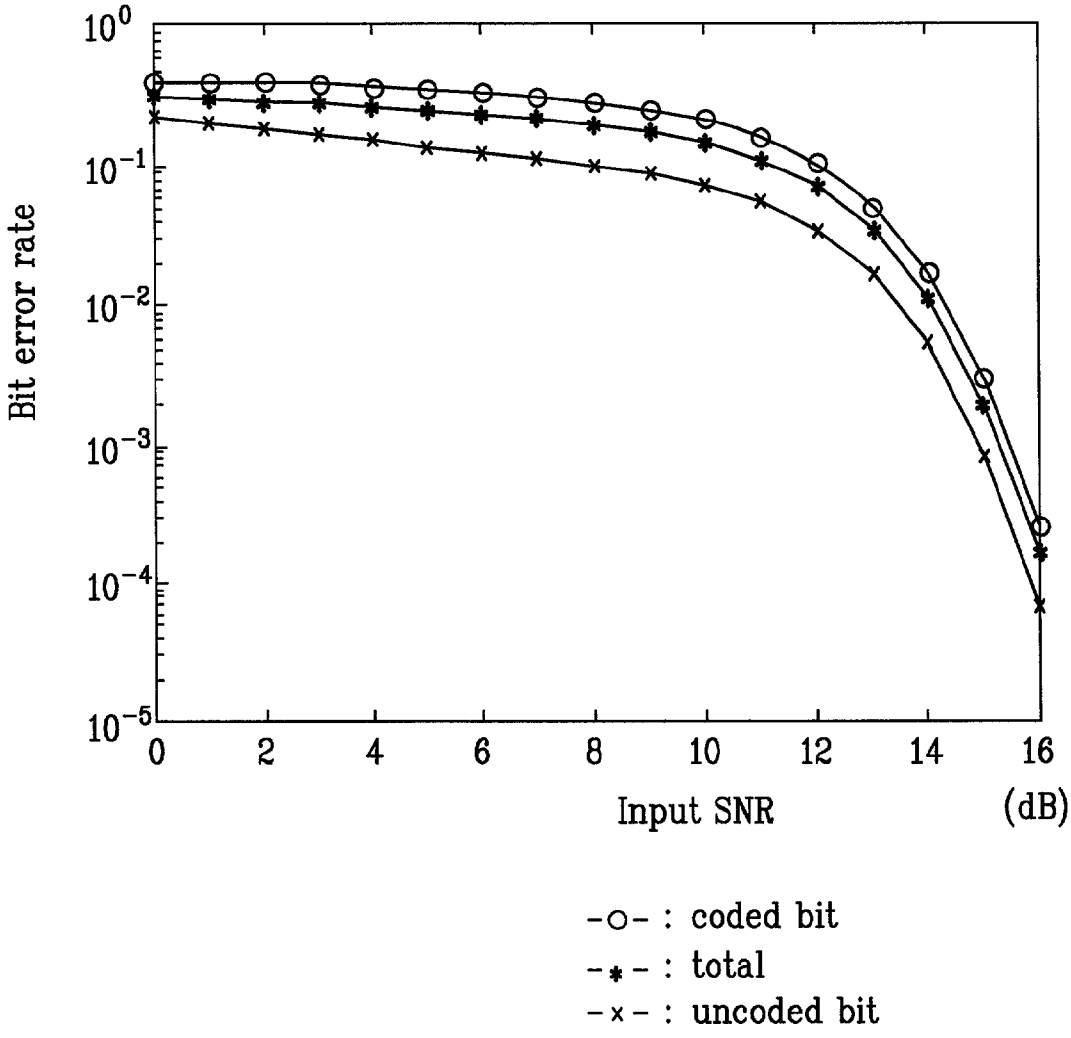
Bit error rate
10^0
10^{-1}
10^{-2}
10^{-3}
10^{-4}
10^{-5}
0
2
4
6
8
10
12
14
16
Input SNR
(dB)
-o- : coded bit
-*- : total
-x- : uncoded bit

FIG. 5

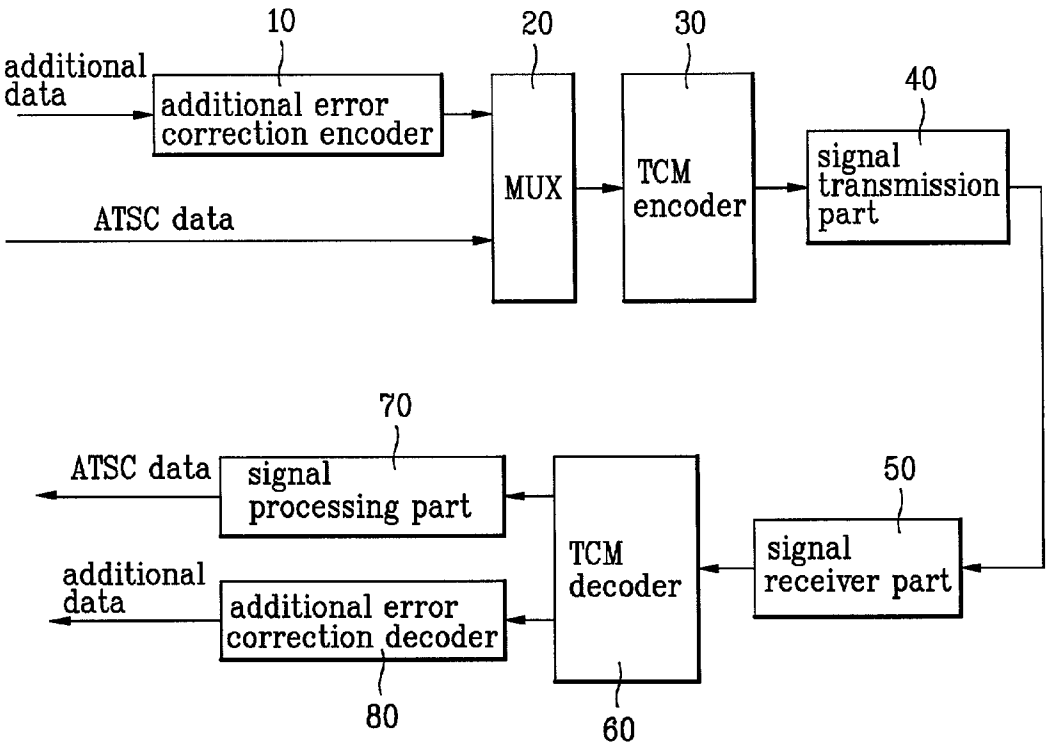
10
20
30
40
additional data
additional error correction encoder
MUX
TCM encoder
signal transmission part
ATSC data
70
ATSC data
signal processing part
50
TCM decoder
signal receiver part
additional data
additional error correction decoder
80
60

FIG. 6

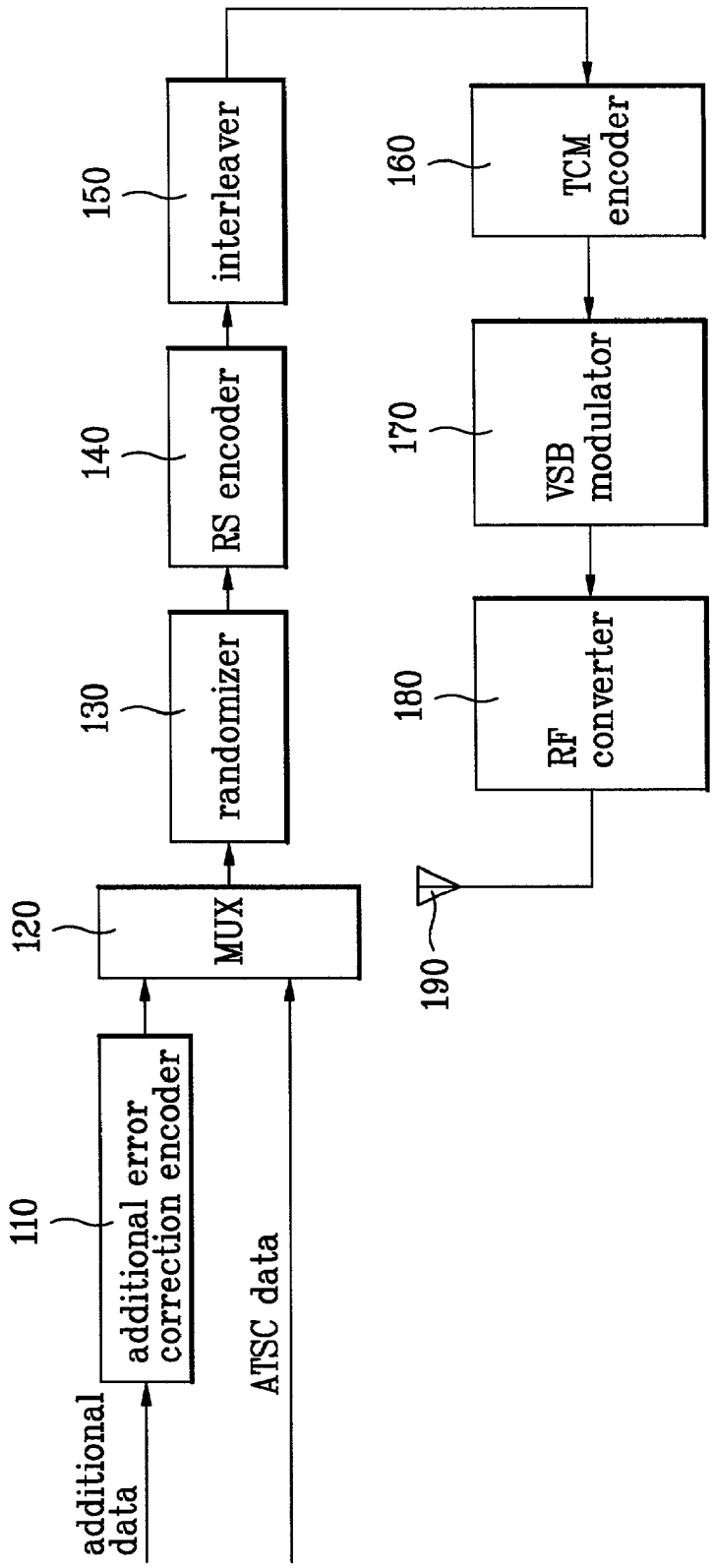
additional data
110
additional error correction encoder
ATSC data
120
MUX
130
randomizer
140
RS encoder
150
interleaver
160
TCM encoder
170
VSB modulator
180
RF converter
190

FIG. 7

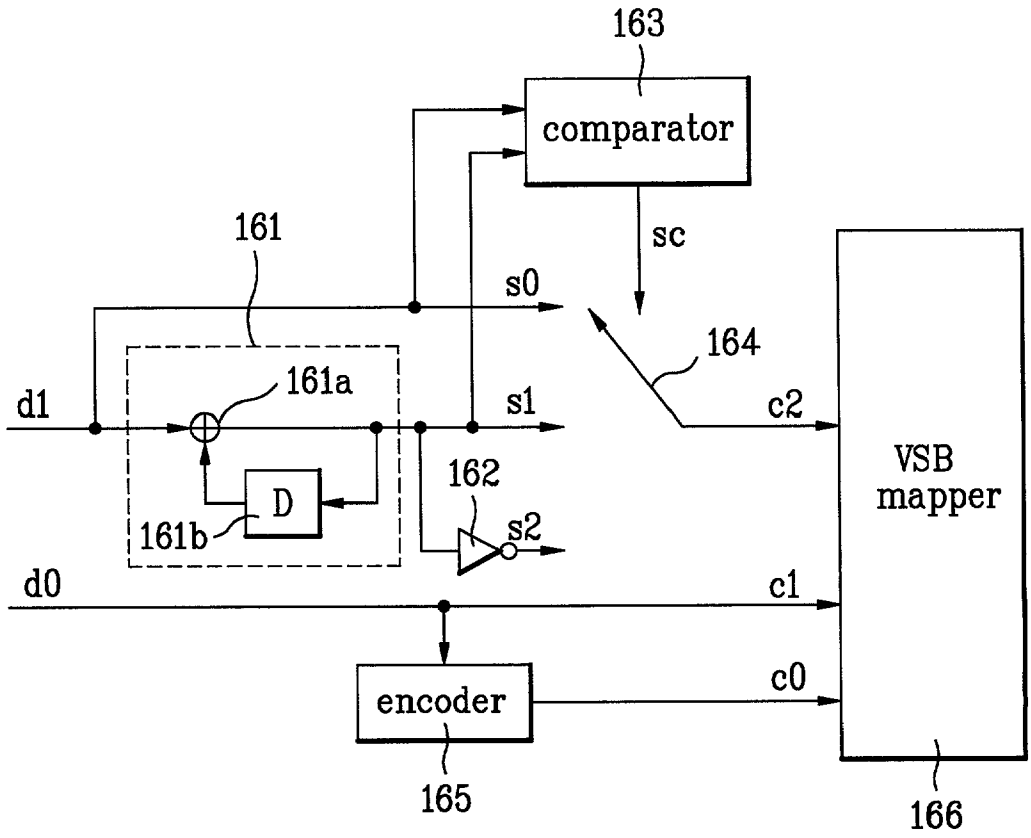
163
comparator
sc
161
s0
164
d1
161a
s1
c2
VSB
mapper
162
D
161b
s2
d0
c1
encoder
c0
165
166

FIG. 8

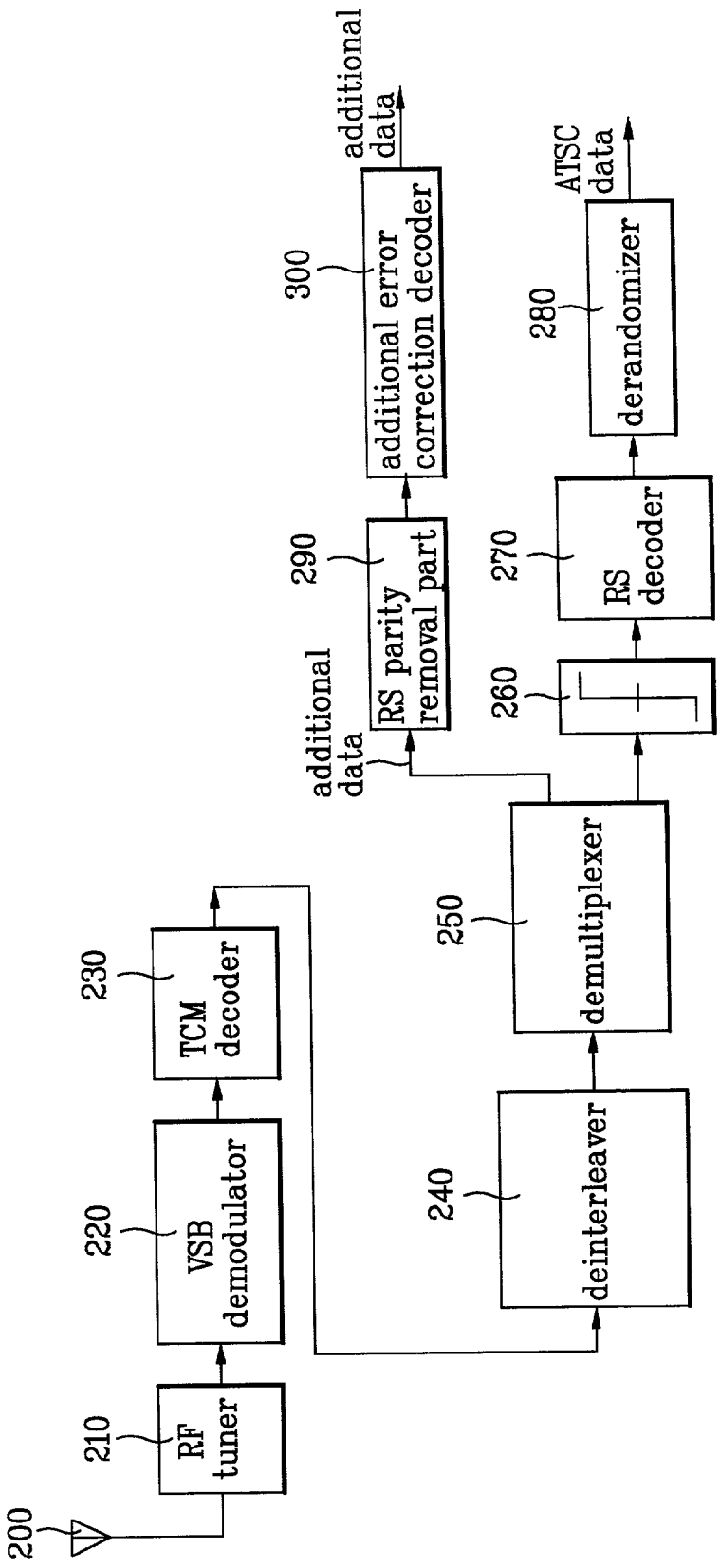
200
210
RF tuner
220
VSB demodulator
230
TCM decoder
240
deinterleaver
250
demultiplexer
260
270
RS decoder
280
derandomizer
ATSC data
290
RS parity removal part
additional data
300
additional error correction decoder
additional data

DIGITAL TELEVISION SYSTEM

BACKGROUND OF THE INVENTION

[0001] 1. Field of the Invention

[0002] The present invention relates to a digital television system carrying out modulation/demodulation by VSB(vestigial side band).

[0003] 2. Background of the Related Art

[0004] An 8 VSB transmission system for terrestrial wave digital broadcasting is taken as a U.S. standard system in 1995 is test-broadcasted from the latter half of the year 1998. Such a test broadcasting using a terrestrial wave digital broadcasting standard based on the U.S. standard system is being carried out in Korea as well.

[0005] In such a digital broadcasting system, a transmitted signal is received by a receiver through a terrestrial channel.

[0006] In order to restore the signal in the receiver despite the noise caused by the channel, the signal is variously coded to be transmitted. In response to the various coding process, the receiver carries out the corresponding decoding process so as to restore the transmitted signal.

[0007] Lately, a broadcasting station tries to transfer such a digital broadcasting, which transfers mainly audio and video data, to which various additional data are attached. The additional data includes stock-market information, weather casting, program guide information, HTML, execution files and the like.

[0008] **FIG. 3** illustrates a structural diagram of a TCM encoder according to a related art.

[0009] Referring to **FIG. 3, a** TCM encoder includes a precoder **1** outputting a first output signal by preceding a first input bit d**1** and an encoder outputting a third output signal by encoding a second input bit as a second output signal cl, where a reference numeral '3' indicates a 8 VSB mapper.

[0010] Meantime, the precoder **1** includes an adder **1***a* outputting the first output signal c**2** by adding the first input bit d**1** to a delayed signal and a memory **1***b* providing the adder la with the delayed signal attained by delaying an output signal of the adder **1***a*.

[0011] The TCM encoder according to a related art may cause a fatal damage on the additional data when using it.

[0012] Different from general audio/video data in channel transmission, the additional data is vulnerable fatally to an influence of the channel noise. For example, the damaged additional data of which information itself is defected may inform a viewer with wrong information, while the damaged general audio/video data just result in light image/voice loss.

[0013] Specifically, when the additional data include numbers or an execution file, a minor data error causes a devastating result of failing the entire operation.

SUMMARY OF THE INVENTION

[0014] Accordingly, the present invention is directed to a digital television system that substantially obviates one or more problems due to limitations and disadvantages of the related art.

[0015] An object of the present invention is to provide a digital television system fitting for transmitting additional data.

[0016] Another object of the present invention is to provide a digital television system robust to a noise.

[0017] A further object of the present invention is to provide a digital television system compatible with a conventional digital television system.

[0018] Additional advantages, objects, and features of the invention will be set forth in part in the description which follows and in part will become apparent to those having ordinary skill in the art upon examination of the following or may be learned from practice of the invention. The objectives and other advantages of the invention may be realized and attained by the structure particularly pointed out in the written description and claims hereof as well as the appended drawings.

[0019] To achieve these objects and other advantages and in accordance with the purpose of the invention, as embodied and broadly described herein, a VSB transmitter includes an additional error correction encoder carrying out state transition processes on additional data inputted to correct an error and designed for a TCM coding to be considered wherein the TCM coding will be carried out later, a multiplexer multiplexing the additional data and ATSC data wherein the additional and ATSC data are inputted thereto, a TCM encoder operating in a manner corresponding to the state transition processes of the additional error correction encoder and encoding the ATSC and additional data outputted from the multiplexer, and a signal transmission part converting the ATSC and additional data outputted from the TCM encoder into an RF(radio frequency) signal and transmitting the RF signal to a receiver.

[0020] In another aspect of the present invention, a VSB receiver includes an RF tuner tuning RF signal transmitted from a VSB transmitter, a VSB demodulator demodulating IF signal outputted from the RF tuner, a TCM decoder decoding the ATSC data and additional data, a deinterleaver deinterleaving soft output of the TCM decoder, a limiter carrying out a hard decision on the soft-outputted ATSC data, an RS decoder decoding the hard-outputted ATSC data, a derandomizer derandomizing the ATSC data having passed through the RS decoder, and an additional error correction decoder part carrying out an error correction on the soft-outputted additional data.

[0021] Preferably, the TCM decoder in the VSB receiver is a decoder producing a soft output signal with a soft input signal.

[0022] It is to be understood that both the foregoing general description and the following detailed description of the present invention are exemplary and explanatory and are intended to provide further explanation of the invention as claimed.

BRIEF DESCRIPTION OF THE DRAWINGS

[0023] The accompanying drawings, which are included to provide a further understanding of the invention and are incorporated in and constitute a part of this application, illustrate embodiment(s) of the invention and together with the description serve to explain the principle of the invention. In the drawings:

[0024] **FIG. 1** illustrates a TCM encoder and a signal mapper in an ATSC 8 VSB system according to a related art;

[0025] **FIG. 2** illustrates a diagram for a set partitioning used in the TCM encoder in **FIG. 1**;

[0026] **FIG. 3** illustrates a structural diagram of a TCM encoder according to a related art;

[0027] **FIG. 4** illustrates a performance graph of a TCM encoder in an 8 VSB system on an AWGN(additive white Gaussian noise) channel;

[0028] **FIG. 5** illustrates a VSB communication system according to the present invention;

[0029] **FIG. 6** illustrates a VSB transmitter according to the present invention;

[0030] **FIG. 7** illustrates a TCM encoder according to the present invention; and

[0031] **FIG. 8** illustrates a VSB receiver according to the present invention.

DETAILED DESCRIPTION OF THE PREFERRED EMBODIMENTS

[0032] Reference will now be made in detail to the preferred embodiments of the present invention, examples of which are illustrated in the accompanying drawings.

[0033] **FIG. 4** illustrates a performance graph of a TCM code of an 8 VSB system in AWGN(additive white Gaussian noise) channel.

[0034] A bit error rate of an uncoded bit d**1**, another bit error rate of a coded bit d**0**, and a total bit error rate when regarding the uncoded and coded bits d**1** and d**0** as one stream are shown in **FIG. 4**.

[0035] Referring to **FIG. 4**, the bit error rate of the uncoded bit is lower than that of the coded bit. And, the bit error rate of the entire bits corresponds to an average between the respective bit error rates of the uncoded and coded bits. It is because a sub-set is determined by the coded bit, while a signal in the determined sub-set is determined by the uncoded bit.

[0036] When a set partitioning of the TCM code, a performance of the uncoded bit determining signals in the sub-set is superior to that of the coded bit since a distance between signals in one sub-set is allotted so as to be longer than that that between signals two different subsets.

[0037] In use of such a characteristic, data having a higher significance are inputted using the uncoded bit d**1** having a relatively lower bit error rate than the coded bit d**0** and another data having a less significance are inputted using the coded bit c**0** having a higher bit error rate than the uncoded bit d**1**. Therefore, it is able to design a more efficient digital television system.

[0038] **FIG. 5** illustrates a VSB communication system according to the present invention.

[0039] Referring to **FIG. 5**, the VSB communication system is divided into a VSB transmitter and a VSB receiver.

[0040] The VSB transmitter is constructed with an additional error correction encoder **10** encoding additional data to correct an error thereof additionally and designed in a manner that a signal mapping of a TCM encoder is considered, a multiplexer(MUX) **20** multiplexing an output signal of the additional error correction encoder **10** and inputted ATSC data, a TCM encoder **30** operating in a manner corresponding to state transition processes of the additional error correction encoder **10**, and a signal transmission part **40** transmitting an output of the TCM encoder **30** as a radio base to a receiver side.

[0041] The VSB receiver is constructed with a signal receiver part **50** receiving a signal transmitted from the signal transmission part **40**, i.e. a transmitter side, a TCM decoder **60** decoding a signal outputted from the signal receiver part **50**, a signal processing part **70** processing an output signal of the TCM decoder **60**, and an additional error correction decoder **80** restoring the additional data by decoding the output signal of the TCM decoder **60** additionally.

[0042] The signal processing part **70** is constructed with a limiter limiting the output signal of the TCM decoder **60**, an RS decoder decoding an output signal of the limiter, and a derandomizer derandomizing an output signal of the RS decoder.

[0043] **FIG. 6** illustrates a VSB transmitter according to the present invention.

[0044] Referring to **FIG. 6, a** VSB transmitter is constructed with an additional error correction encoder **110** carrying out an encoding for correcting an error additionally on additional data, a multipluxer(MUX) **120** multiplexing the additional data and the general ATSC data failing to pass through the additional error correction encoder **110**, a randomizer **130** randomizing an output signal of the multiplexer **120**, an RS(reed-solomon) encoder **140** RS-encoding an output signal of the randomizer **130** to add a parity code, an interleaver **150** interleaving an output signal of the RS encoder **140** to protect transmission data from a burst noise possibly occurring on a transmission channel, a TCM encoder **160** encoding an output signal of the interleaver **150** into a TCM code, a VSB modulator **170** VSB-modulating an output signal of the TCM encoder **160**, an RF converter **180** converting an output signal of the VSB modulator **170** into an RF signal, and a transmission antenna **190** transmitting the RF signal to a receiver side.

[0045] **FIG. 7** illustrates a detailed construction of the TCM encoder **160** in **FIG. 6** according to the present invention, where the TCM encoder **160** is transformed from a conventional precoder.

[0046] Referring to **FIG. 7, a** TCM encoder is constructed with a precoder **161** outputting a second switch input signal s**1** by preceding a first input bit dl as a first switch input signal s**0**, an inverter **162** outputting a third switch input signal s**2** by inverting the second switch input signal s**1**, a comparator **163** providing a switching control signal by comparing the first and second switch input signals s**0** and s**1** each other, a switch **164** selectively outputting one of the first to third switch input signals s**0** to s**2** as a first output signal c**2**, and an encoder **165** encoding a second input bit d**0** as a second output signal c**1** so as to output a third output signal c**0**. And, a reference numeral '166' indicates a VSB mapper.

[0047] When the first input bit d**1** is additional data, the input bit d**1** is output through the switch s**0**. At this time, the input bit d**1** is also input to the precoder **161**. When the first

input bit d1 is ATSC data, the input bit d1 is divided into two depending on the last bit of the additional data. If the output of the switch s0 at the last bit is equal to the output of the switch s1, an output value of the precoder is output, If not so, an inverse value of the precoder is output.

[0048] Meanwhile, the precoder **161** includes an adder **161***a* outputting the second switch input signal s1 by adding the first input bit d1 and a delayed signal each other and a memory **161***b* providing the adder **161***a* with a signal attained by delaying an output signal of the adder **161***a* for a predetermined time.

[0049] The above operations on the first bit d1 is to bypass the precoder in case of additional symbol and maintain compatibility with the related art VSB receiver. The term "compatibility" means that even though the precoder is bypassed in case of additional symbol, the related art VSB receiver can decode ATSC data symbol without error.

[0050] The operation of the VSB transmitter is explained in detail as follows.

[0051] Different from the general ATSC data, the additional data for additional services such as an execution file, HTML and the like require the additional error correction encoder **110** for preventing a performance degradation caused by the noise.

[0052] First, for error correction, the additional data having passed through the additional error correction encoder **110** and the general ATSC data failing to pass through the additional error correction encoder **110** are multiplexed by the multiplexer **120** so that one of the additional and ATSC data is outputted.

[0053] Subsequently, the additional or ATSC data passed through the multiplexer **120** enter the randomizer **130**.

[0054] In this case, the additional data bypasses the randomizer **130**, while the ATSC data becomes random through the randomizer **130**.

[0055] A parity is then added to the additional data and the ATSC data passed through the randomizer **130** in the RS(reedsolomon) encoder **140**. And, the additional and ATSC data are interleaved in the interleaver **150** so as to protect the transmission data from the burst noise might occur in the transmission channel.

[0056] Then, the additional and ATSC data outputted from the interleaver **150** are encoded again in the TCM encoder **160**.

[0057] As mentioned in the above explanation, the additional and ATSC data passed through the TCM encoder **160** are free from errors even if the additional data are inputted thereto, which is different from the case using the conventional precoder failing to have the switching function in **FIG. 3**.

[0058] For instance, let's assume that a bit **0** is put in the memory **1***b* of the precoder **161** in **FIG. 3** and that a bit stream inputted into the precoder is the following a**1**.

[0059] 1011001000010111011001 . . . (a**1**), where underlines beneath the stream a**1** indicates an additional data interval which is additional-error-correction-encoded.

[0060] When the additional data interval of the bit stream a**1** fails to pass through the precoder **161** and the ATSC code interval passes through the precoder **161**, the following bit stream a**2** is attained.

[0061] 11011010001101101001 . . . (a**2**)

[0062] If all of the bit stream a**2** pass through a post decoder, an output of the post decoder is represented by the following bit stream a**3**.

[0063] 10110111001011011010 1 . . . (a**3**)

[0064] In the bit stream a**3**, a bit **1** denoted by a bold-(darkened) numeral of 1 belongs to the previous ATSC data interval, which means that an error occurs. Namely, comparing the input bit stream a**1** to the output bit stream a**3** of the post decoder, the darkened bit of the output bit stream a**3** of the post decoder is changed in the previous ATSC data interval excluding the additional data interval(the underlined bits).

[0065] However, after the input bit stream a**1** passes through the TCM encoder **160** corresponding to the modified precoder in **FIG. 7**, the following stream a**4** shows up.

[0066] 11011010001101101111 0 . . . (a**4**)

[0067] After all of the bit stream a**4** pass through the post decoder, the post decoder outputs the following bit stream a**5**.

[0068] 10110111001011011000 1 . . . (a**5**)

[0069] Hence, after the input stream a**1** having passed through the modified predecoder passes the post decoder, the bit stream a**5** outputted from the post decoder becomes equal to the input bit stream a**1** in the previous ATSC data interval. Namely, no bit stream error takes place in the previous ATSC data interval.

[0070] **FIG. 8** illustrates a diagram of a VSB receiver according to the present invention.

[0071] Referring to **FIG. 8**, the VSB receiver is constructed with an RF(radio frequency) tuner tuning the RF signal received through an antenna **200**, a VSB demodulator **220** demodulating IF signal outputted from the RF tuner **210**, a TCM decoder **230** decoding an output signal of the VSB demodulator **220** and then providing soft output, a deinterleaver **240** deinterleaving the ATSC and additional data having the soft signal form outputted from the TCM decoder **230**, a demultiplexer **250** dividing the data outputted from the deinterleaver **240** into the additional data and the ATSC data and then outputting the divided data, a limiter **260** deciding the ATSC data outputted from the demultiplexer **250**, an RS decoder **270** decoding an output signal of the limiter **260**, a derandomizer **280** derandomizing an output signal of the RS decoder **270**, an RS parity removal part **290** removing a parity from the additional data outputted from the demultiplexer **250**, and an additional error correction decoder part **300** decoding an output signal of the RS parity removal part **290** for error correction.

[0072] Operation of the VSB receiver is explained as follows.

[0073] First, the additional and ATSC data received from the VSB transmitter through the antenna **200** are tuned through the RF tuner **210**.

[0074] The ATSC and additional data outputted from the RF tuner **220** are demodulated through the VSB demodulator **220**. the output signal of the VSB demodulator **220** is decoded by the TCM decoder **230** so as to be outputted as the soft signal form.

[0075] At this moment, the TCM decoder **230** should produce a soft output in order to maximize a performance of the additional error correction encoder **110** in the transmitter shown in **FIG. 6**.

[0076] SOVA(soft output viterbi algorithm) and MAP-(maximum A posteriori) are algorithms for producing a soft output for a trellis coded data. In aspect of a symbolic error, the MAP algorithm is superior to SOVA.

[0077] However, the optimal MAP algorithm has disadvantages such as a calculation of probability in an exponential domain and a presumption of a noise variance of a transmission channel.

[0078] Besides, there is SSA(suboptimum soft output algorithm) as a sort of the MAP algorithm, in which a probability is calculated in a logarithmic domain without reducing a performance of the receiver and the presumption of the noise variance is unnecessary.

[0079] Therefore, if the SSA algorithm is used as a decoding algorithm, four soft outputs, which are shown in the following calculation formula e**1**, are produced for the input bits d**1** and d**0** of the additional error correction encoder **110**.

[0080] $L(\mathbf{00})^{OC}$_Log P(d1d**0=00**|observation)

[0081] $L(\mathbf{01})^{OC}$_Log P(d1d**0=01**|observation)

[0082] $L(\mathbf{10})^{OC}$_Log P(d1d**0=10**|observation)

[0083] $L(\mathbf{11})^{OC}$_Log P(d1d**0=11**|observation) . . . (e**1**)

[0084] The soft outputs produced by the SSA decoder are measurements of the probability values for four kinds of combinations of "d**1**" and "d**0**" attained after the decoding. Meanwhile, when a convolutional code as an external code is used, these soft outputs are directly used as the branch metric.

[0085] Successively, the ATSC and additional data of the soft signal form outputted from the TCM decoder **230** are deinterleaved in the deinterleaver **240**.

[0086] In this case, the ATSC data, which are outputted from the deinterleaver **240** are made random in the randomizer **130** of the transmitter, come to pass through the derandomizer **280**. Besides, as the derandomizer **280** needs a hard signal form, hard decision should be carried out on the ATSC data outputted from the deinterleaver **240** as the soft form.

[0087] Yet, the hard decision process is unnecessary for the additional data, which are outputted from the deinterleaver **240** and fail to pass through the derandomizer **280**.

[0088] Therefore, in order to carry out the hard decision process on the ATSC data outputted from the deinterleaver **240**, the ATSC data pass through the limiter **260** and the RS decoder **270** in order and then are inputted to the derandomizer **280**.

[0089] However, in order to remove the parity added thereto in the transmitter without the hard decision process, the additional data outputted from the deinterleaver **240** pass through the RS parity removal part **290** and then go by way of the additional error correction decoder part **300**.

[0090] As mentioned in the above description, the digital communication system according to the present invention enables to carry out a data transmission of a high reliance having a signal to noise ratio by adding an additional error correction encoder having a desirable state transition property when used with the mapping of the TCM encoder to an outside of the TCM encoder, thereby enabling to improve a performance of the digital communication system.

[0091] The forgoing embodiments are merely exemplary and are not to be construed as limiting the present invention. The present teachings can be readily applied to other types of apparatuses. The description of the present invention is intended to be illustrative, and not to limit the scope of the claims. Many alternatives, modifications, and variations will be apparent to those skilled in the art.

What is claimed is:

1. A VSB transmitter comprising: an additional error correction encoder carrying out state transition processes on additional data inputted to correct an error and designed for a TCM coding to be considered wherein the TCM coding will be carried out later;

a multiplexer multiplexing the additional data and ATSC data wherein the additional and ATSC data are inputted thereto;

a TCM encoder operating in a manner corresponding to the state transition processes of the additional error correction encoder and encoding the ATSC and additional data outputted from the multiplexer; and

a signal transmission part converting the ATSC and additional data outputted from the TCM encoder into an RF(radio frequency) signal and transmitting the RF signal to a receiver.

2. The VSB transmitter of claim 1, further comprising a randomizer, an RS encoder, and an interleaver which are connected in order between the multiplexer and the TCM encoder in series.

3. The VSB transmitter of claim 1, wherein the randomizer processes the ATSC data only.

4. The VSB transmitter of claim 1, the signal transmission part comprising:

a VSB modulator VSB-modulating an output signal of the TCM encoder;

an RF converter converting an output signal of the VSB modulator into an RF signal and outputting the RF signal; and

a transmission antenna transmitting an output of the RF converter to a receiver side.

5. The VSB transmitter of claim 1, wherein the additional error correction encoder uses a convolutional encoding method.

6. The VSB transmitter of claim 1, the TCM encoder comprising:

a precoder preceding the inputted data; and

a signal path selection part making the inputted data go by way of or avoid the precoder in accordance with whether the inputted data are the additional data or the ATSC data.

7. The VSB transmitter of claim 1, wherein whether the inputted data goes by way of or avoid the precoder depends on what kind of the additional error correction encoder is.

8. The VSB transmitter of claim 1, wherein the ATSC data includes audio data and video data to be transmitted by a VSB method.

9. A VSB transmitter comprising:

an additional error correction encoder encoding additional data for error correction;

a multiplexer multiplexing the additional data outputted from the additional error correction encoder and ATSC data inputted thereto;

a randomizer bypassing the additional data in the data outputted from the multiplexer and randomizing the ATSC data only;

an RS encoder adding a parity to the additional data and ATSC data outputted from the randomizer;

an interleaver interleaving the additional and ATSC data outputted from the RS encoder;

a TCM encoder bypassing the additional data in the data outputted from the interleaver and encoding the ATSC data only;

a VSB modulator modulating the additional and ATSC data outputted from the TCM encoder; and

an RF converter RF-converting the additional and ATSC data outputted from the VSB modulator.

10. The VSB transmitter of claim 9, the TCM encoder comprising:

a precoder outputting a second switch input signal by preceding a first input bit as a first switch input signal;

an inverter outputting a third switch input signal by inverting the second switch input signal;

a comparator providing a switching control signal by comparing the first and second switch input signals each other;

a switch selectively outputting one of the first to third switch input signals as a first output signal; and

an encoder encoding a second input bit as a second output signal so as to output a third output signal.

11. The VSB transmitter of claim 10, wherein the comparator provides the switching control signal so that the comparator, when the first input bit as the first switch input signal is equivalent to the second input signal, outputs the second switch input signal as the first output signal and that the comparator, when the first switch input signal is different from the second switch input signal, outputs the third switch input signal as the first output signal.

12. The VSB transmitter of claim 10, the precoder comprising:

an adder outputting the second switch input signal by adding the first input bit and a delayed signal each other; and

a delayer providing the adder with a signal attained by delaying an output signal of the adder for a predetermined time.

13. A VSB receiver comprising:

a signal receiver part tuning additional data and ATSC data received from a VSB transmitter;

a TCM decoder decoding the ATSC and additional data to output a soft signal;

a signal processing part carrying out a hard decision on the ATSC data having a from of the soft signal outputted from the TCM decoder; and

an additional error correction decoder part decoding the additional data having the form of the soft signal outputted from the TCM decoder for error correction.

14. The VSB receiver of claim 13, the signal processing part comprising:

a limiter limiting the ATSC data outputted from the TCM decoder;

an RS decoder decoding an output signal of the limiter; and

a derandomizer derandomizing an output signal of the RS decoder.

15. A VSB receiver comprising:

an RF tuner tuning RF signal transmitted from a VSB transmitter;

a VSB demodulator demodulating IF signal outputted from the RF tuner;

a TCM decoder decoding ATSC data and additional data;

a deinterleaver deinterleaving soft output of the TCM decoder;

a limiter carrying out a hard decision on the soft-outputted ATSC data;

an RS decoder decoding the hard-outputted ATSC data;

a derandomizer derandomizing the ATSC data having passed through the RS decoder; and

an additional error correction decoder part carrying out an error correction on the soft-outputted additional data.

16. The VSB receiver of claim 15, further comprising an RS parity removal part between the deinterleaver and the additional error correction decoder part to remove a parity of the additional data.

* * * * *