(No Model.) 2 Sheets—Sheet 1.

S. R. PAYNE.

SWITCH OR SIGNAL MECHANISM.

No. 590,333. Patented Sept. 21, 1897.

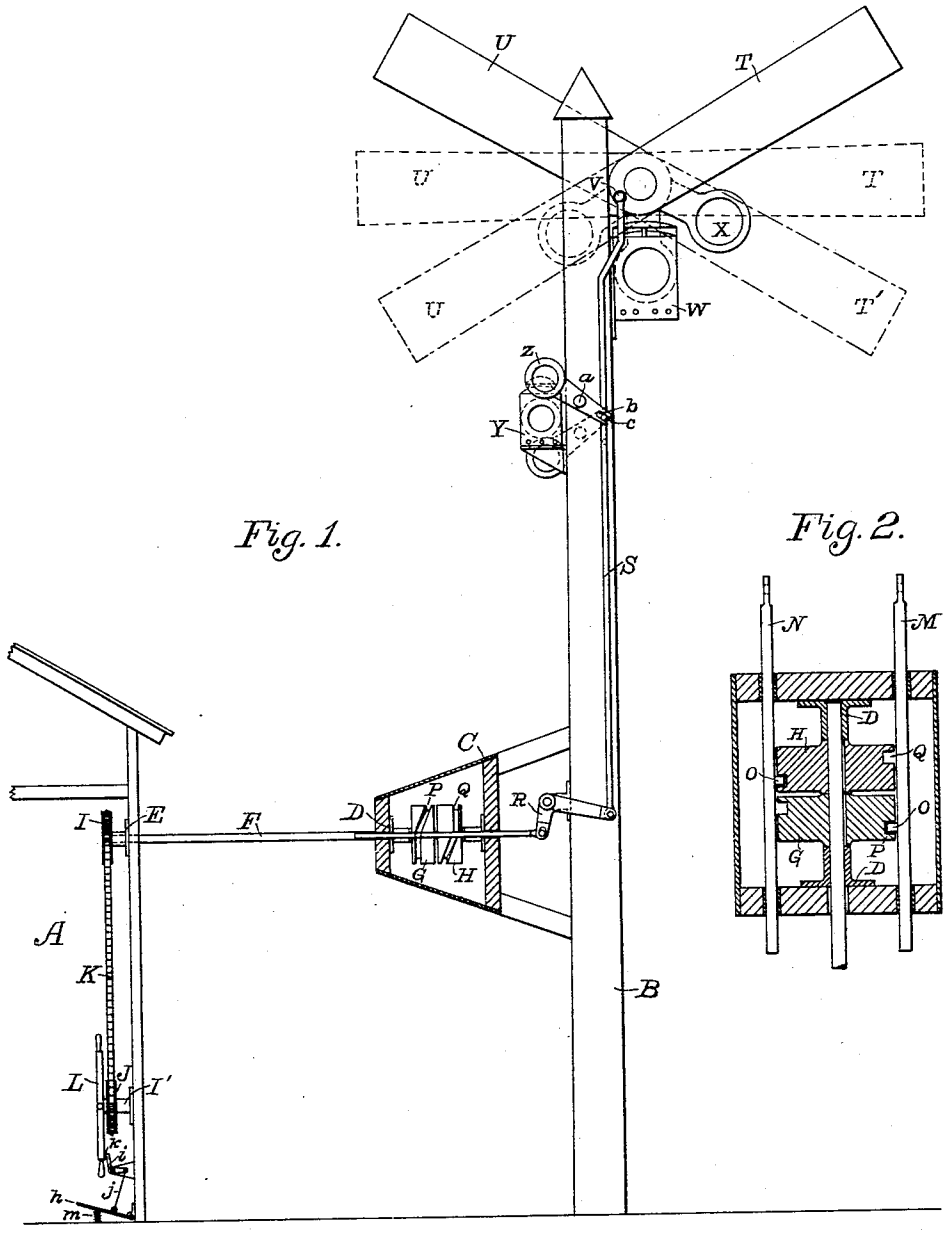

Fig. 1.

Fig. 2.

WITNESSES:

L. G. Hopper.

John W. Larimer.

INVENTOR.

Stephen R. Payne.

BY

Dewhurst & Peterson

ATTORNEYS.

THE NORRIS PETERS CO., PHOTO-LITHO., WASHINGTON, D. C.

(No Model.) 2 Sheets—Sheet 2.

S. R. PAYNE.

SWITCH OR SIGNAL MECHANISM.

No. 590,333. Patented Sept. 21, 1897.

Fig. 4.

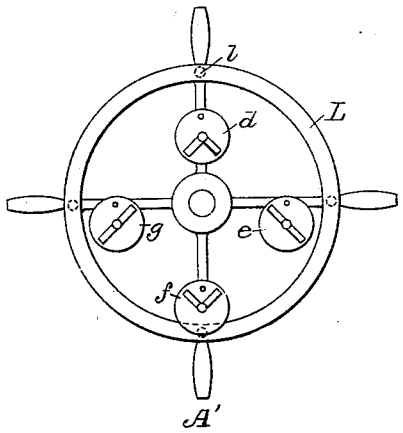

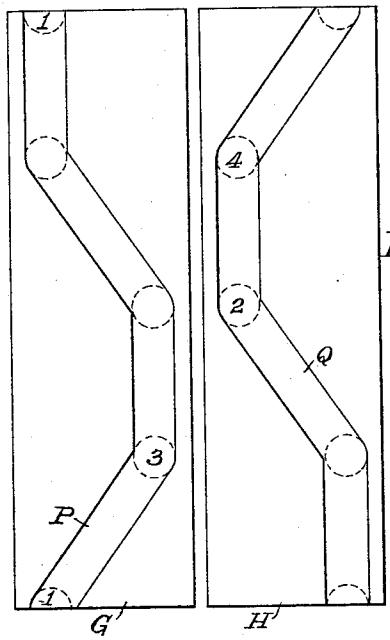

Fig. 3.

Fig. 6.

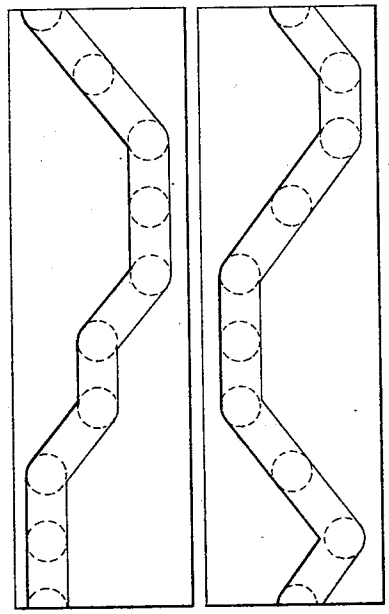

Fig. 5.

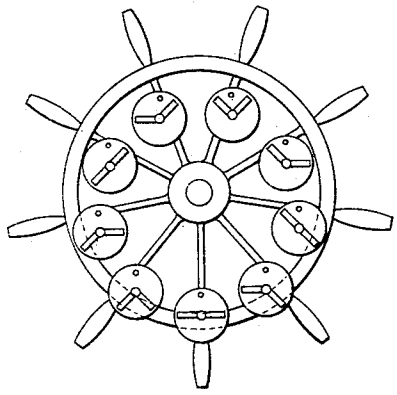

WITNESSES:
L. G. Hopper.
John M. Sarmer.

INVENTOR.
Stephen R. Payne.
BY
Toulmin & Toulmin
ATTORNEY.

THE NORRIS PETERS CO., PHOTO-LITHO., WASHINGTON, D. C.

UNITED STATES PATENT OFFICE.

STEPHEN R. PAYNE, OF YOUNGSTOWN, OHIO.

SWITCH OR SIGNAL MECHANISM.

SPECIFICATION forming part of Letters Patent No. 590,333, dated September 21, 1897.

Application filed March 15, 1897. Serial No. 627,616. (No model.)

To all whom it may concern:

Be it known that I, STEPHEN R. PAYNE, a citizen of the United States, residing at Youngstown, in the county of Mahoning and State of Ohio, have invented certain new and useful Improvements in Switch or Signal Mechanism, of which the following is a specification, reference being had therein to the accompanying drawings.

The invention has reference to an improved mechanism for operating railway-signals, and has particular reference to an operating mechanism for two-way train-order and block signals.

One of the objects of my invention is to provide a mechanism of the kind referred to in which a plurality of signals may be actuated by a single operating device, the mechanism being so constructed that when the operating device is actuated different combinations of signals will be automatically formed.

A further object of the invention is to construct the mechanism in such manner that the signals operated by the same will be constantly under the control of the operator, and, further, after a series of position combinations of said signals have been formed the mechanism for operating the same will be returned to a fixed point, bringing the signals to their initial positions without retracing any of the combinations made.

To attain these objects, I employ a revoluble shaft having a suitable actuating device therefor and connect to said shaft a cam mechanism. Then between said cam mechanism and each of the plurality of signals intermediate connections are employed whereby I am enabled to throw the signals into various combinations, through the agency of the cams, by partial rotations of the shaft, and by a complete rotation of said shaft I am enabled to bring the signals into their initial position without being required to retrace any of the combinations formed.

It will be readily seen by the construction of mechanism thus set forth that several different signals may be operated and a large number of combinations between said signals formed and that all of said combinations will be made during one complete rotation of the shaft. Moreover, the cam mechanism forms a locking device for the signals, preventing further operation of the latter except by the rotation of the shaft which is under the control of the operator.

It is to be noticed that my invention is not necessarily confined to signals alone, as it may be made applicable to switches. It will be shown and described, however, as applied to the former, and preferably to two-way train-order and block signals.

In the accompanying drawings, Figure 1 represents the signal-operating mechanism as in use, showing a signal-tower in which a part of the mechanism is located and an ordinary signal-tower to which the remainder of the signaling mechanism is secured. Fig. 2 is a plan view of the cam mechanism. Fig. 3 illustrates the peculiar construction and formation of the cams, showing the grooves in their peripheries developed. Fig. 4 is a front elevation of the indicator-wheel employed where only two positions of the signal are to be used. Fig. 5 is a similar elevation of the indicating-wheel employed where three positions of the signal are used, indicating, respectively, the positions of "caution," "block," and "clear;" and Fig. 6 illustrates the cams employed with the latter indicating device, showing the grooves in their peripheries developed in the same manner as in Fig. 3.

In Fig. 1 the letter A represents an ordinary signal-tower, in front of which is located the signal-pole B. Upon the side of the pole opposite the tower is fixedly secured a bracket C, constituting a housing for part of the operating devices of the signal mechanism. Within the bracket, in bearings D and in a corresponding bearing in the tower E, a shaft F is located, and upon the shaft, within the housing, cam-wheels, preferably of the scroll type, G and H are fixedly secured.

Upon the end of the shaft within the tower a sprocket-wheel I is secured, and below said wheel, in bearings I′, is a similar sprocket J, being connected to the former by a sprocket-chain K. Fixedly secured to the sprocket J is a hand-wheel L, upon the rotation of which power is transmitted through the sprocket-wheels to the revoluble shaft F.

It is quite apparent that a mechanism as just described is not essential to the operation of the shaft F, as the hand-wheel L might be directly connected to said shaft. As a

matter of convenience, however, and to place the revoluble shaft out of the way of interference the mechanism just described has been employed.

Upon either side of the bracket C and slidingly secured in said bracket, as plainly shown in Fig. 2, are the rectangular bars M and N, and extending from each of said bars is a stud O, preferably provided with a bushing, (not shown,) which studs are adapted to engage in the continuous grooves P and Q in the peripheries of the cam-wheels G and H, respectively. Upon either side of the signal-pole is a bell-crank lever R, the free ends of said lever being connected, respectively, to one of the rectangular bars and a signal-rod, such as S, one being located upon each side of the pole. At the top of the latter are located the usual semaphores T and U, pivotally secured to said pole by means of suitable brackets. Each signal-rod S at its upper end is secured to one of the semaphores, as at V, in such a manner that upon the upward movement of the rod the semaphore will be moved downwardly. The usual lamp W is secured to the signal-pole, and to the semaphores are attached the ordinary colored disks X, which are adapted to be thrown in front of the lamp when the semaphore is in the danger position.

A safety appliance is used in connection with my signaling apparatus, which consists of a second lamp Y, arranged on the pole opposite to the lamp W, and a second disk Z, pivoted to the pole at *a* and adapted to be thrown in front of the lamp Y simultaneously with the movement of the disk X in front of the lamp W, the disk Z having a slotted end *b*, which engages a pin *c* upon the signal-rod, whereby upon the movement of said rod the disk is thrown into the desired position. The object of this second lamp and its disk is for the purpose of maintaining a red light when the semaphore is in a position of "danger" if an accident should occur to the red lens in the disk X.

Upon the wheel L are arranged a series of disks *d e f g*, pivotally secured to the spokes of said wheel, as plainly shown in Fig. 4, which have printed thereon double positions of the signals. These positions, as shown, represent the semaphores as showing at *d* the two tracks clear, at *e* one track clear and the other blocked, and so on, there being four combinations in all. As the wheel is rotated the disks are free to move upon their pivots, whereby at all times they maintain their proper positions.

The parts having been thus described and shown, their operation is as follows: The operator, desiring to throw one or both of the signals, rotates the indicator-wheel L, thereby revolving the shaft and actuating the cams thereon. The rectangular bars M and N are moved laterally with respect to the cam-wheels through the pins O engaging the grooves in said cams, the latter devices with the variations in the grooves being the controlling and locking mechanism for the semaphores which are actuated through the agency of the bars.

To illustrate the manner in which the signals are operated, we will suppose that the two semaphores T and U are in the positions illustrated in full lines in Fig. 1 and as shown by the disk *f* in Fig. 4, said disk being at the lowest point of travel of the wheel, at a point A'. In this position the signals show both tracks blocked and the stud upon the bar M is at a point 1 in the groove in the periphery of the cam-wheel G, while the stud upon the corresponding bar N would be at a point 2 upon the cam-wheel H, all as plainly shown upon the developed grooves, Fig. 3.

If it is desired to shift the signals showing the right-hand track clear and the left blocked, the operator rotates the wheel to the right one-quarter of a revolution, bringing the disk *e* in the position just vacated by the disk *f*. The travel of the pins in the grooves will be as follows: The stud, engaging the groove Q in the cam H, will travel from point 2 to 4, said distance being in a straight line, whereby the bar N, although constantly locked, is moved in neither direction. Upon this one-quarter revolution of the indicator-wheel, therefore, the position of the semaphore U remains unchanged.

The pin upon the bar M traverses the groove in the periphery of the cam G, taking a diagonal course, from point 1 to 3, whereby the bar is moved rearwardly, causing the semaphore T to assume the position shown in dotted lines at T', Fig. 1.

Upon further rotation of the wheel the disks *d* and *g* are brought to the required point and the grooves are so formed that the semaphores will rise or fall to correspond with the index upon each disk. It is easily seen, therefore, that the operator when standing before the indicator-wheel and desiring to throw the signals for blocking or clearing the tracks is only required to choose from the disks upon the wheel the combination of signals that is desired and then to rotate the wheel until the required disk is in the lowest position of its travel—namely, at the point A'.

It is obvious that the required combination can be obtained by rotating the wheel in either direction on account of the grooves in the cam. Moreover, it is apparent that any position may be selected as an initial starting-point for the wheel, to which point each disk may be brought.

In order to lock the wheel after the desired rotation is obtained, I employ a locking device comprising a foot-lever *h*, which is connected to a bell-crank lever *i* by connecting-rod *j*. The lever *i* is provided with an extension *k*, which is adapted to be thrown into one of the recesses *l* formed in the back of the wheel L, as plainly shown by dotted lines in Fig. 4. A spring *m* is interposed between the foot-treadle and the floor, by means of which the extension *k* is kept within the re-

cess until withdrawn by the depression of the foot-treadle *h*.

My invention has been described as used where only two positions for the signals are necessary—namely, the "block" and the "clear." If the third position of "caution" is desired to be employed, an indicator-wheel, such as that shown in Fig. 5, is used, the pivoted disks on said wheel representing the nine different combinations that can be formed with the three positions of the signals. The operation of the parts is exactly the same as where two positions are used, with the exception that the cams have a different construction of groove in their peripheries. The construction required for the nine positions is shown in Fig. 6.

It is obvious, after the description thus given of my invention, that the latter may be applied to operate switches in the same manner as signals, as the mechanism would require simply to be made attachable at the bell-crank lever R to a switch instead of to a semaphore. The indicator-disks upon the wheel would show the different combinations of the positions of the two switches in the same manner that the positions of the signals are illustrated.

It is also apparent that as many signals or switches can be operated as required by simply adding a cam for each additional switch or signal. Also, instead of using a plurality of cam-wheels, one single cam or drum may be employed in which a plurality of continuous grooves are formed in its periphery.

It is to be noticed in the construction of my mechanism that the signals are so arranged that all the most important danger positions are grouped together upon one side of the wheel, so as to enable the operator to reach the desired danger position without passing through the extreme travel of said wheel. As it is immaterial which way the indicator-wheel is rotated, where four combinations of the signals are employed, the desired position is never more than two movements distant from the extreme opposite point, as it can be reached in either direction. Where nine combinations are employed, the required position is only four movements from the extreme opposite point. By this method of construction considerable time is saved in operating the signals or switches.

Although I have shown the drum or drums as mounted upon a revoluble shaft, I do not wish to limit myself to this particular construction of mechanism for rotating the drum, as various other devices may be employed. Moreover, while my claims mention grooved drums as the actuating device for the signals, I intend that it shall include within the terms used any means which have a progressively forward movement to set a series of signals to different combinations and by such continuous forward movement will reset the signals to their initial position.

Having thus described my invention, what I claim, and desire to secure by Letters Patent, is—

1. In a signal-operating mechanism, the combination with a revoluble shaft and a device for actuating the same, a cam mechanism operated by the shaft comprising a drum provided with two or more continuous and independent grooves, a plurality of signals, and intermediate connections between the grooved drum and each of said signals, whereby upon partial rotations of the drum, various position combinations of the signals are obtained, and upon the complete rotation of said drum the signals will be returned from their positions assumed in the various combinations to their initial position.

2. In a signal-operating mechanism, the combination with a revoluble drum provided with a plurality of continuous and independent grooves, mechanism for revolving said drum, a plurality of signals, and intermediate connections between the grooved drum and each of said signals.

3. In a two-way train-order and block signal operating mechanism, the combination with a revoluble shaft, of a hand-wheel connected to and adapted to operate the same, indicators, showing the various combinations of the signals, arranged upon the wheel, a cam mechanism operated by the shaft, and intermediate connections between the cam mechanism and each of said signals.

4. In a switch or signal operating mechanism, the combination with a revoluble shaft, of a hand-wheel connected to and adapted to rotate the same, indicators showing the various combinations of the switches or signals arranged upon the wheel, a cam mechanism fixedly secured to the shaft, and intermediate connections between the cam mechanism and each of a plurality of switches or signals, substantially as described.

5. In a switch or signal operating mechanism, the combination with a revoluble shaft and an actuating device therefor adapted to rotate the same, a scroll-cam fixedly secured to the shaft, a bar mounted in proximity to the cam having a stud thereon adapted to engage said cam, a signal-pole and a signal mounted thereon, a signal-rod, a bell-crank lever connecting said signal-rod with the bar, a colored disk pivoted upon said signal-pole below the signal, and connections between the signal-rod and the disk, substantially as and for the purpose described.

In testimony whereof I affix my signature in presence of two witnesses.

STEPHEN R. PAYNE.

Witnesses:
JOHN M. LARIMER,
CHARLES L. STOCKER.