United States Patent [19]

Harders

[11] **3,824,578**

[45] **July 16, 1974**

[54] **ATTITUDE INDICATOR FOR LOAD LIFTING APPARATUS AND METHOD**

[76] Inventor: **Holton G. Harders,** 5521 E. Highway 98, Panama City, Fla. 32401

[22] Filed: **May 22, 1972**

[21] Appl. No.: **255,707**

[52] **U.S. Cl.**..... **340/267 C,** 200/61.52, 212/39 R, 340/282

[51] **Int. Cl.** **G08b 21/00**

[58] **Field of Search**..... 340/267 C, 282, 52 H, 272; 212/39 R; 180/104; 200/47, 61.52; 280/6 R

[56] **References Cited**

UNITED STATES PATENTS

3,236,535	2/1966	Barber	200/61.52
3,680,714	8/1972	Holmes	340/267 C
3,693,145	9/1972	Mize	200/61.52
3,713,129	1/1973	Buchholz	340/267 C

Primary Examiner—John W. Caldwell
Assistant Examiner—Glen R. Swann, III
Attorney, Agent, or Firm—Browne, Beveridge, DeGrandi & Kline

[57] **ABSTRACT**

In a load lifting apparatus such as a crane mounted on a support frame, a method and system for actuating an alarm when the support frame is vertically displaced a predetermined amount through inclination of the support frame to indicate an unsafe inclined attitude of the apparatus support frame. In one embodiment wherein the crane is supported on a tractor, four switches are respectively mounted at spaced locations on the tractor frame to be actuated by associated control arms mounted for vertical movement relative to the tractor frame when the latter has undergone a predetermined unsafe amount of inclination. Any one of the switches upon closing will close a battery operated electrical circuit containing the alarm to sound the alarm. In another embodiment, the arm and switch assemblies are applied to an "outrigger" jack system used to support the crane above the ground surface.

24 Claims, 14 Drawing Figures

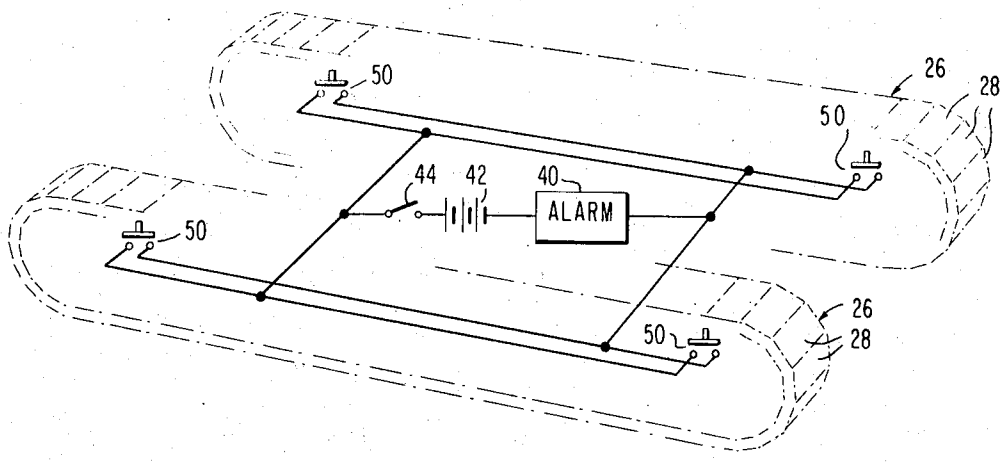

FIG. 1a

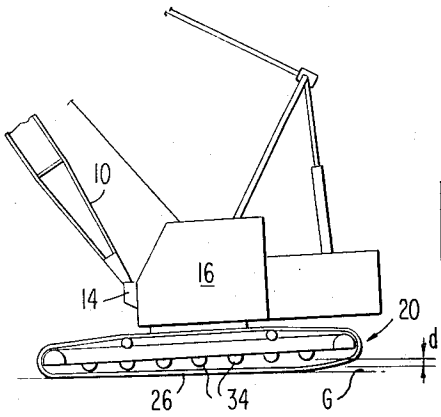

FIG. 1

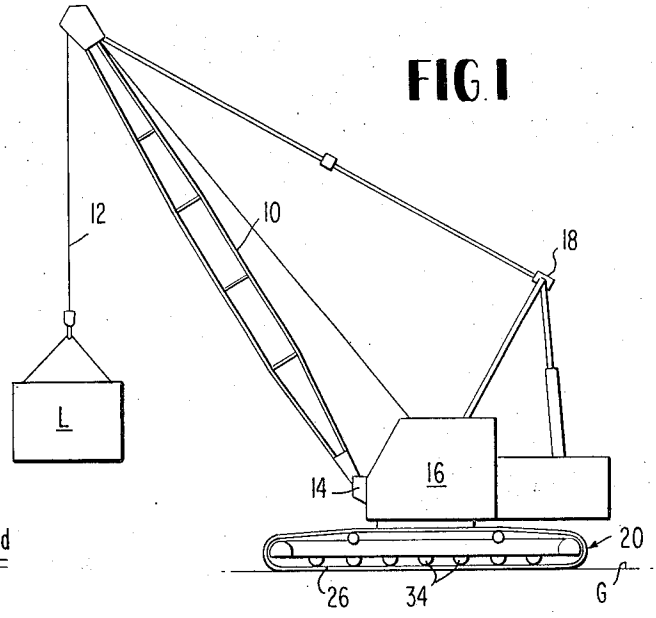

FIG. 2

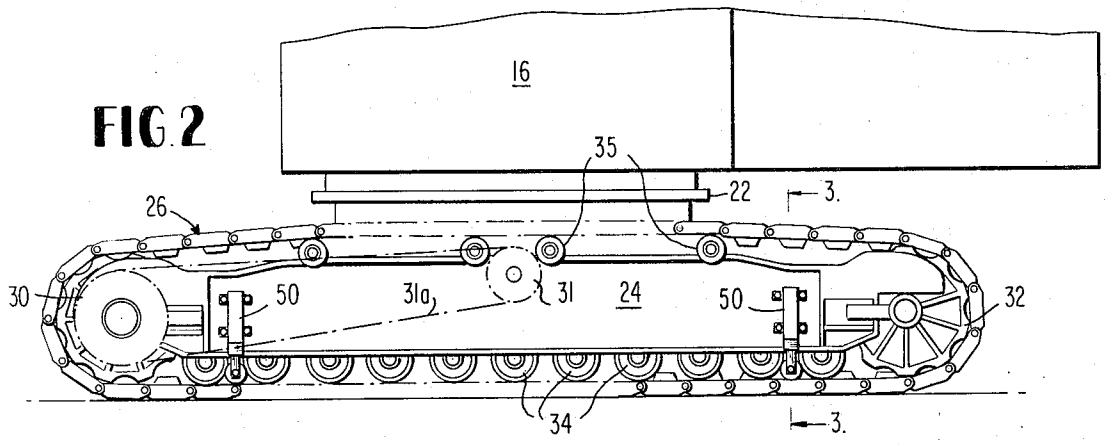

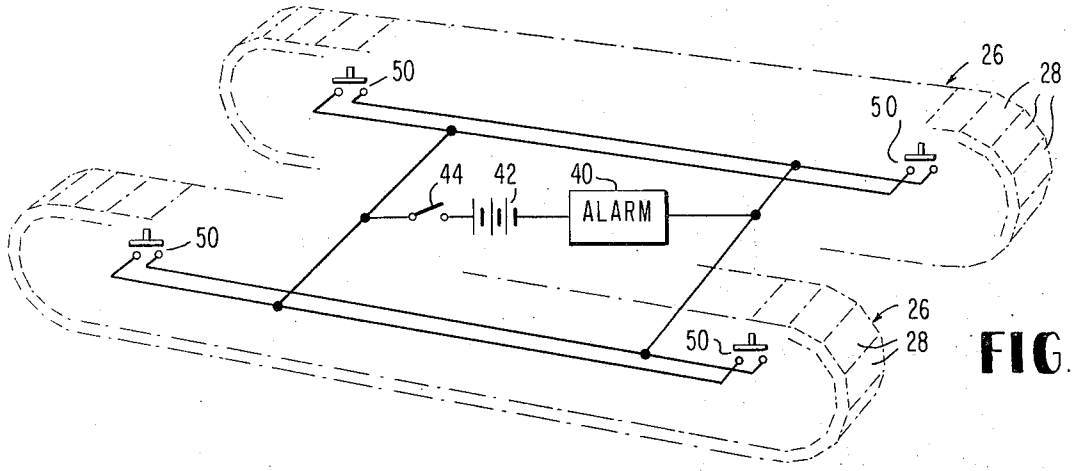

FIG. 7

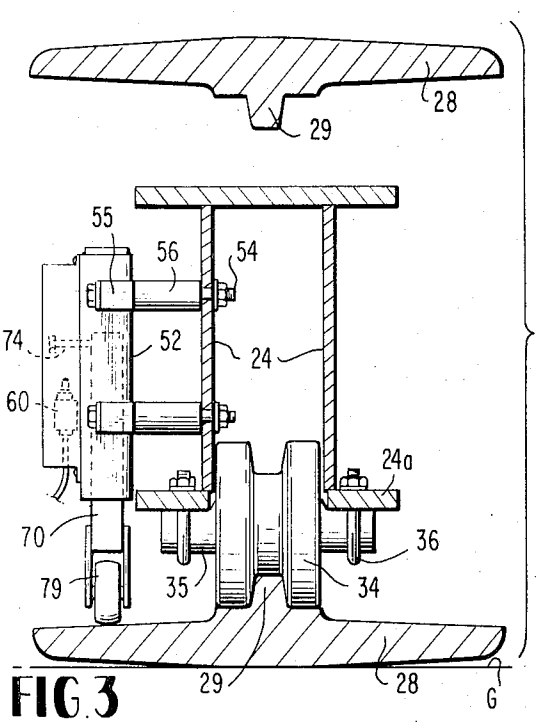

FIG. 3

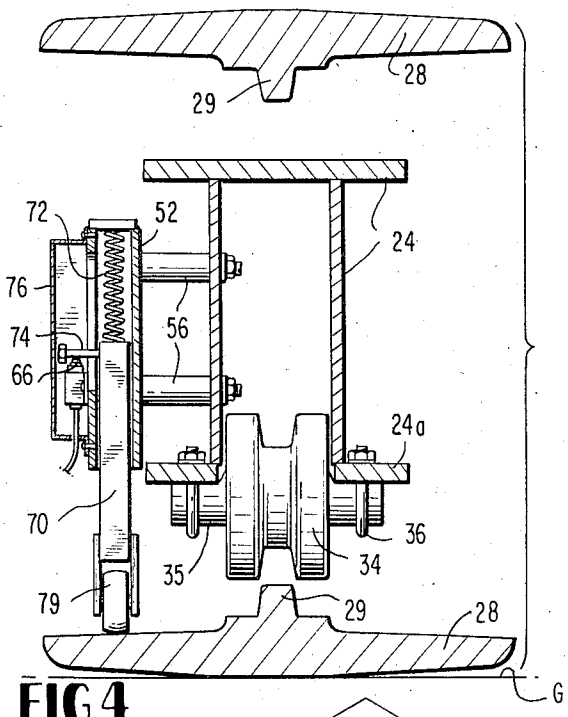

FIG. 4

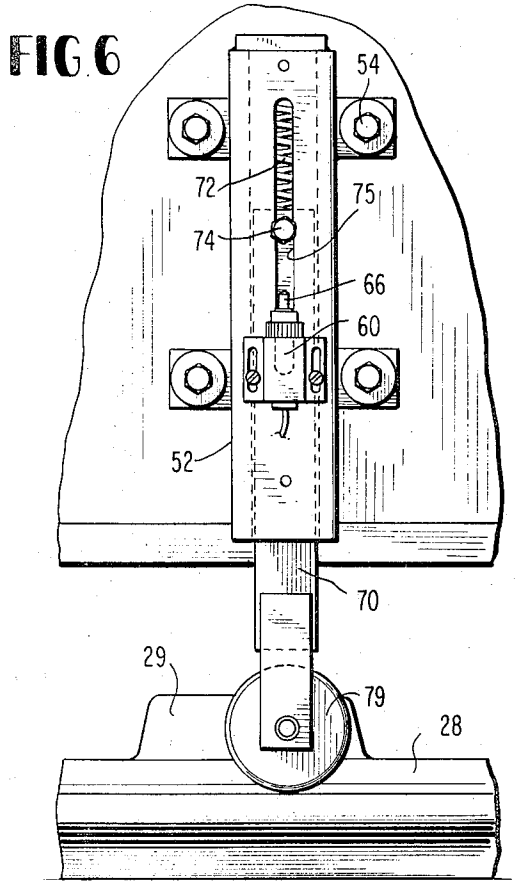

FIG. 6

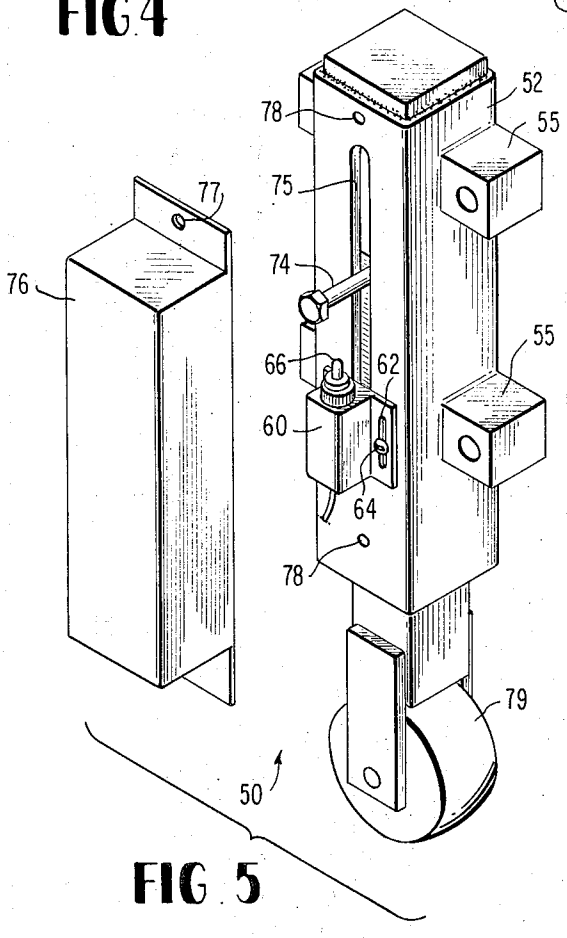

FIG. 5

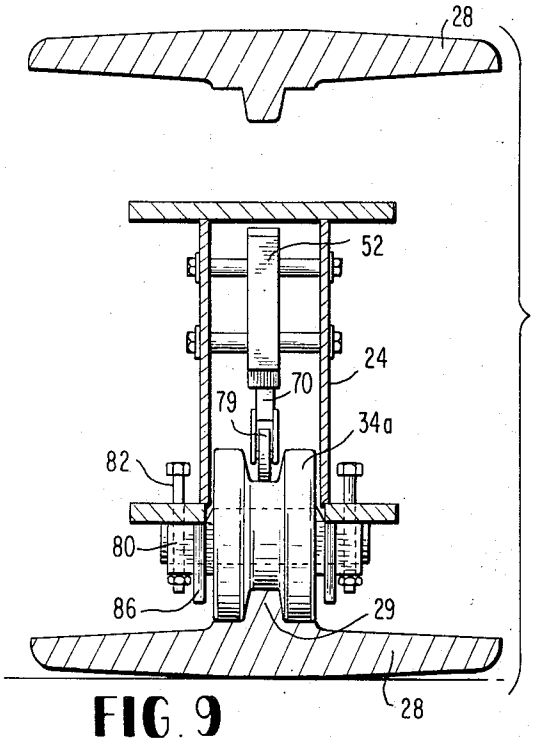

FIG. 9

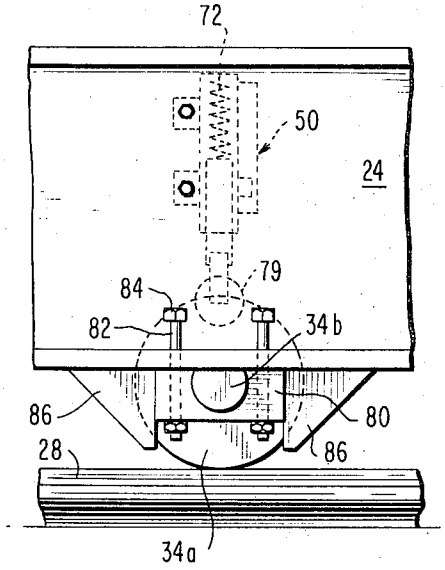

FIG. 8

FIG. 10

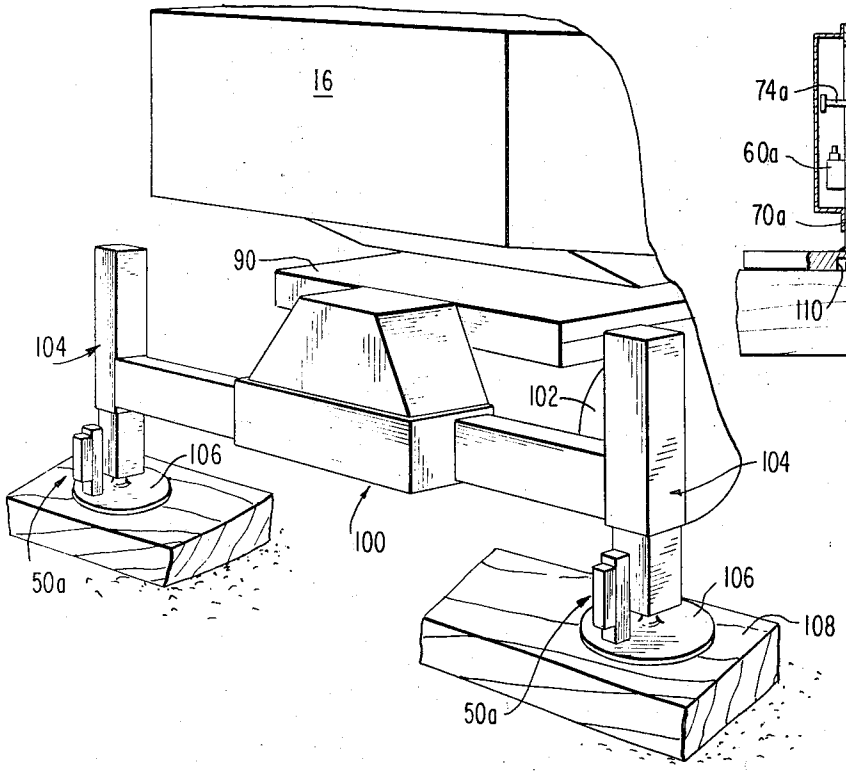

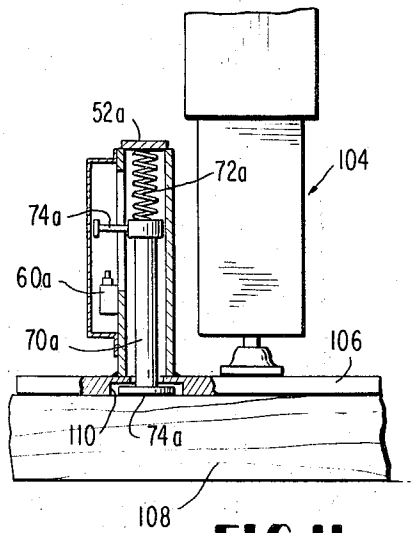

FIG. 11

FIG. 12

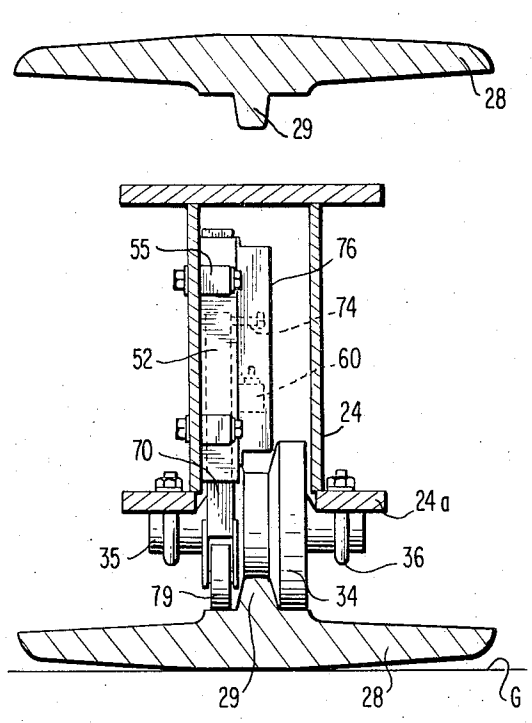
28
29
55
76
74
52
60
24
70
24a
35
36
79
34
29
28
G

FIG. 13

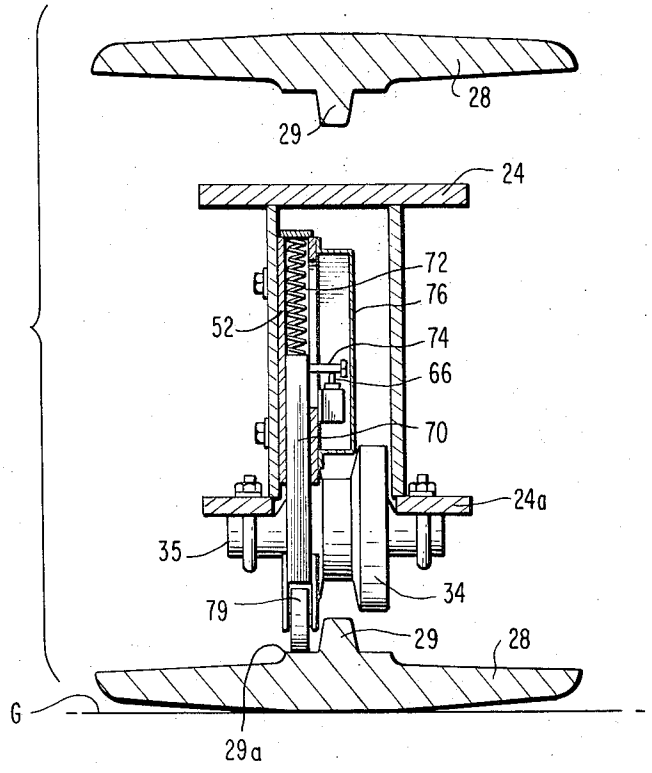
28
29
24
72
76
52
74
66
70
24a
35
34
79
29
28
G
29a

ATTITUDE INDICATOR FOR LOAD LIFTING APPARATUS AND METHOD

BACKGROUND OF INVENTION

In operating load lifting apparatus such as a crane, the underlying support frame of the crane is free to undergo inclination relative to the ground surface depending upon the position of the load being lifted or the inclination of the ground surface. For example depending on the weight of the load and its distance from the pivot point of the crane boom to the crane body, a moment can be exerted on the support frame causing the support frame to tilt or move into an inclined position which if excessive can cause the crane and support frame to upset or turn over. Naturally the latter result can cause serious injury to personnel as well as damage to the load and crane apparatus. Inclination of the crane support frame can also result in cases where the crane support frame is resting on an inclined surface and the moment produced by the load being lifted, although insufficient to cause excessive tilting when the support frame is on a level surface, becomes sufficient to cause tilting when resting on an inclined surface.

Past and present attempts to avoid the above-noted problems have utilized various weight and/or angle gauges on the boom of the crane for indicating the weight being lifted and the angle of the boom. With this procedure, the crane operator is required to determine the weight of the load and the angle of the boom and then from a chart calculate the inclination of the support frame. Obviously this is a very cumbersome and error prone procedure particularly since it must be carried out as the load lifting operation proceeds.

Other efforts to provide an indication of the inclined attitude of the crane support frame have included complicated electronic devices which are expensive and in many cases unreliable.

OBJECTS OF THE INVENTION

The present invention constitutes a novel method and apparatus for quickly and accurately determining an unsafe attitude of load lifting apparatus such as a crane. Included herein is such a method and apparatus which will clearly indicate an unsafe inclined attitude without requiring mental calculation or judgment on the part of the operator of the load lifting apparatus.

A further object of the present invention is to provide such a method and apparatus which are virtually foolproof and may be easily and economically implemented in standard or conventional load lifting apparatus such as tractor or wheel supported cranes where they will successfully function to indicate unsafe attitudes of the apparatus over long periods of repeated and rugged use.

SUMMARY OF INVENTION

In summary, the above and other objects are achieved in connection with a crane supported on a frame which may be mounted on a tractor or an axle and wheel assembly, for ground travel. In the case of a tractor supported crane, a number of electrical switches are fixed on the support frame at spaced locations for example two on each side with one adjacent the front end and the other, the rear end of the tractor. A plurality of switch actuating arms are mounted in association with the switches respectively for vertical movement relative to the frame when the frame tilts or

inclines. If the tilt or inclination of the frame reaches a predetermined amount which is unsafe, the actuator arms will actuate the associated switches to close an electrical circuit and energize an alarm such as a buzzer or similar loud noise, which will indicate to the crane operator the unsafe condition. The alarm circuit is incorporated on the tractor frame and may be suitably powered such as by battery.

With respect to cranes that are mounted on a frame suspended on a wheel and axle assembly, and wherein prior to use of the crane, the frame is raised by an "outrigging" system of jacks, the switch and arm assemblies of the present invention are incorporated on the base plates of the jacks. Should the frame incline to an unsafe degree causing one or more of the base plates to rise, the switch associated with the rising base plate, which switch is fixed to the base plate for movement therewith, will rise relative to the associated actuating arm to be engaged thereby thus closing the switch and sounding the alarm.

DRAWINGS

Other objects and advantages of the present invention will become apparent from the following more detailed description taken in conjunction with the attached drawings in which:

FIG. **1** is a side view of a tractor mounted crane incorporating safety apparatus of the present invention, and showing a load lifted by the crane with the tractor in a stable level attitude;

FIG. **1***a* is a fragmental side view similar to FIG. **1** but showing the tractor in a forwardly inclined position;

FIG. **2** is an enlarged fragmental side view of the crane particularly illustrating the tractor portion thereof;

FIG. **3** is a cross sectional view taken generally along line **3—3** of FIG. **2** and illustrating the safety apparatus of the present invention when in a non-operating position such as when the tractor frame is in a stable or safe attitude as shown in FIG. **1**;

FIG. **4** is a view similar to FIG. **3** but when the tractor support frame has moved into a dangerous inclined position, the view showing the safety device of the present invention in operation to sound an alarm;

FIG. **5** is an exploded perspective view of a portion of the safety apparatus of the present invention;

FIG. **6** is a side elevational view of the apparatus of FIG. **5** when mounted in the tractor and viewed for example from the left hand side of FIG. **4** but with an associated housing removed;

FIG. **7** is a schematic view of the tractor illustrating an electrical alarm circuit and the positions of the safety apparatus of FIG. **5**;

FIG. **8** is a fragmental side view of a portion of a tractor frame and an associated endless track but incorporating a modified form of the safety apparatus of the present invention;

FIG. **9** is an end view of the apparatus shown in FIG. **8** but also showing in transverse cross section, the upper and lower runs of one of the endless tracks of the tractor;

FIG. **10** is a perspective view of a portion of an outrigger jack system for raising and lowering a crane such as may be supported on a wheel and axle assembly, and incorporating another modification of the present invention; and

FIG. 11 is a cross sectional view of safety apparatus embodying the present invention incorporated in the apparatus of FIG. 10 and

FIGS. 12 and 13 are views similar to FIGS. 3 and 4 respectively but disclosing a preferred embodiment of the invention.

DETAILED DESCRIPTION

Referring to the drawings in detail there is shown in FIGS. 1 and 1a for illustrative purpose only, a typical crane incorporating the present invention. The crane typically includes a boom 10 from which is suspended a cable 12 for lifting a load L; boom 10 being pivoted at 14 to body 16 for movement about a horizontal axis while being tied relative to body 16 through means of an articulated support system generally designated 18. Crane body 16 which contains the usual operator's cab (not shown) from which the crane is operated, is mounted on a tractor 20 such as commonly referred to as a CATERPILLAR tractor, by means of a turntable 22 on which body 16 can rotate relative to the tractor about a vertical axis.

Tractor 20 typically includes a frame generally designated 24 having mounted thereto on opposite sides thereof, a pair of endless tracks 26 comprised of a series of linked pads 28 trained about opposite end-sprockets 30 and 32. Sprocket 30 is a drive sprocket driven from the engine (not shown) through sprocket 31 and chain 31a as shown in FIG. 2 while sprocket 32 is an idler sprocket. Driving connection between sprockets 30 and 32 and endless tracks 26 is made by lugs or teeth 29 (see FIG. 3) formed on the inner side of each track pad 28 to engage the teeth on sprockets 30 and 32. Rotatably mounted on the undersides of frame 24 are a series of rollers 34 normally engageable on the inner sides of track pads 28 as shown in FIG. 3. Additional rollers 35 are rotatably mounted on the upper sides of support frame 24 to engage the upper runs of tracks 26 in conventional manner. The apparatus described above thus far is conventional and well known and therefore need not be described in greater detail, it being understood that the above-described apparatus itself forms no part of the present invention.

When the crane is operating in a stable attitude such as shown in FIG. 1, the tractor frame 24 is in a general horizontal plane with the frame rollers 34 engaging upon the lower runs of endless tracks 26. However should the load L be shifted for example too far forwardly of the tractor to cause an excessive moment to be exerted in a counterclockwise direction (as viewed in FIGS. 1 and 1*a*) on the tractor frame, the tractor frame will tilt forwardly downwardly moving into an inclined position as shown in FIG. 1*a*. Because of the inherent slack which exists between rollers 34 and endless tracks 26, frame 24 with rollers 34 thereon will move relative to endless tracks 26 with the result being a spacing designated *d* in FIG. 1*a* between rollers 34 and the underlying run of endless tracks 26.

In accordance with the present invention this displacement of tractor frame 24 which occurs relative to ground surface G or endless tracks 26 which remain on the ground surface regardless of the inclination of the frame, is employed to operate an electrical switch for energizing an alarm circuit for sounding an alarm when the inclination has reached an excessive, unsafe degree. Hearing the alarm, the crane operator may immediately adjust the position of the load L to restore the tractor to a stable attitude for example as shown in FIG. 1.

The alarm circuit, schematically shown in FIG. 7, is incorporated in the tractor and includes an alarm 40 to be activated by any one of a number of switch assemblies 50 incorporated in the tractor frame as will be subsequently described in greater detail; there being shown four such switch assemblies 50, two per endless track 26 with the switches for each endless track 26 being located adjacent opposite ends thereof as shown in FIG. 7. The circuit is powered by any suitable battery 42 and further may be provided with a master switch 44 for opening the circuit and preventing activation of alarm 40 regardless of switch assemblies 50.

Referring now to FIGS. 3 to 6, each switch assembly in the shown embodiment includes an elongated generally rectangular mounting sleeve 52 closed at its top end and open at its bottom end and being mounted by a plurality of elongated bolts 54 to the inner side walls of the tractor frame 24 in generally vertical position. Mounting bolts 54 pass through outwardly projecting lugs 55 on sleeve 52 and through spacer sleeves 56 located between mounting sleeve 52 and tractor frame 24 to space mounting sleeve 52 away from the side wall of tractor frame 24.

In the preferred form of the invention shown in FIGS. 12 and 13, the mounting assemblies 50 are mounted directly to frame side wall 24 at locations between two frame rollers 34. As will be described in greater details subsequently, each switch assembly 50 includes a bearing in the form of a roller 79. In the embodiment of FIGS. 3 and 4 this roller 79 engages the track pad 28 laterally outwardly of the lugs 29 as shown. However in the preferred embodiment of FIGS. 12 and 13, roller 79 engages the inner race 29*a* of track pad 28 as shown in FIGS. 12 and 13.

Adjacent the lower end of mounting sleeve 52 is an electrical switch 60 fixed thereto by means of screws 64 which pass through slots 62 in the switch housing; slots 62 serving to permit the position of switch 60 to be adjusted along the mounting sleeve 62 for purposes which will become apparent subsequently. Electrical switch 60 has an upwardly facing contact 66 the depression of which will close the circuit shown in FIG. 7 to actuate alarm 40 when master switch 44 is closed.

Telescopingly mounted within mounting sleeve 52 is an elongated leg 70 having a rectangular cross section and being yieldably urged downwardly by a coil compression spring 72 received in the upper portion of mounting sleeve 52 with its upper end bearing against the top of mounting sleeve 52 and its lower end bearing against the top of leg 70 as best shown in FIG. 4. The lower end of leg 70 is provided with a bearing means such as roller 79 for engaging the upper or internal sides of the endless track pads 28 of the lower track runs.

For purposes of closing and opening switch 60, an actuator or control arm 74 which may be in the form of a fixed bolt or stud, is secured to an upper portion of leg 70 so as to project laterally therefrom through an elongated slot 75 formed in the external sidewall of mounting sleeve 52 as best shown in FIGS. 4, 5 and 6. In order to protect switch 60 and associated control arm 74 a casing 76 shown as having a box like configuration may be secured to the outer side wall of support sleeve 52 through screws passing through aperture 77

in the casing flanges and received in apertures **78** of support sleeve **52** as shown in FIG. **5.**

In use during operation of the crane, when the latter is in a stable generally horizontal attitude such as shown in FIG. **1,** spring **72** in support sleeve **52** will urge leg **70** downwardly so that its roller **79** will engage the upper or inner surface of endless track pads **28** as for example as shown in FIGS. **2, 3** and **6.** In this condition of the tractor and switch assemblies **50,** control arm **74** will be spaced from contact **66** of switch **60** as shown for example in FIGS. **3** and **6.** However should the tractor frame **24** move into an inclined position relative to the ground surface G such as may be caused by a shift in the position of the load, or the weight of the load, or the ground surface being inclined or a combination of any of the latter three factors, certain of the frame rollers **34** will move upwardly away from the underlying pads **28** of the endless tracks **26** such as for example shown in FIG. **1***a*. Such displacement of frame **24** and rollers **34** relative to the endless tracks **26** will permit spring **72** of the adjacent switch assembly **50** to force the telescoping leg **70** downwardly. This of course will bring control arm **74** closer to contact **66** of switch **60.** The position of control arm **74** and switch contact **66** is calibrated so that upon inclination of the frame **24** to a predetermined degree which is dangerous or unsafe, the control arm **74** will move sufficiently to engage switch contact **66** to close switch **60** and thereby activate alarm **40** to indicate to the crane operator the dangerous attitude of the apparatus. The crane operator may then correct the weight distribution by changing the position of load L so as to restore frame **24** to a stable or less inclined attitude. This restoration movement of frame **24** will bring rollers **34** closer towards endless tracks **26** which will have the effect of retracting leg **70** into its support sleeve **52** thereby disengaging control arm **74** from switch contact **66** to open the alarm circuit and deactivate alarm **40.**

In order to calibrate the relative position of the control arm **74** and switches **60,** to make it suitable for a particular crane operation, screws **64** mounting switches **60** to support sleeves **52** may be loosened and the switches **60** moved along support sleeve **52** by virtue of the slots **62** provided in the casing of the switches **60.** When the desired spacing between the switch contact **66** and control arm **74** is achieved, screws **64** may be tightened to fix switches **60** in the desired position.

It will be seen from the above that the safety apparatus of the present invention is directly responsive to the change of attitude of the tractor frame **24** so that its operation is extremely sensitive and reliable. Furthermore, the safety apparatus of the present invention may be utilized to correct excessive longitudinal as well as transverse inclination of the track frame **24** since the four switch assemblies **50** spaced as shown and described will sense transverse as well as longitudinal inclinations of the tractor frame as well as diagonal inclinations. It should further be appreciated that switch assemblies **50** may be constructed from relatively simple but sturdy materials which are not subject to breakdown or loss of sensitivity so that they may be extremely reliable to indicate excessive dangerous attitudes of the tractor frame **24** despite repeated and rugged use over long periods of time.

Referring now to FIGS. **8** and **9,** there is shown a modified safety apparatus in accordance with the present invention wherein the switch assemblies **50** are fixed to the tractor frame to overlie the central recesses in the frame rollers **34***a* so that rollers **79** of the switch assemblies **50** engage the rollers **34***a* in the recesses thereof as shown in FIG. **9** under the bias of springs **72.** In this modification however frame rollers **34***a* are mounted for vertical movement relative to tractor frame **24** by means of bearing blocks **80** which receive the shafts **34***b* of rollers **34***a*. Bearing blocks **80** in turn are fixed to elongated vertical bolts **82** mounted for vertical sliding movement relative in and to tractor frame **24;** the downward movement of the blocks **80** being limited by stops in the form of nuts **84** secured to the upper ends of bolts **82.** Furthermore a pair of triangular plates **86** defining a vertical channel are secured to the undersides of frame **24** to receive and guide blocks **80** in their vertical movement.

During operation of the crane when the latter is in a stable or relatively horizontal position such as shown in FIG. **1,** rollers **34***a* will engage pads **28** in the lower runs of tracks **26** and switch assemblies **50** will be disengaged due to the spacing between control arms **74** and the associated switch contacts **66.** However should the tractor frame **24** move into an excessively inclined position wherein frame **24** will move upwardly away from the ground surface G and the lower run of tracks **26,** this will permit spring **72** of the switch assembly adjacent the upward displacement of the frame **24** to move the associated leg **70** downwardly thus restoring engagement between frame rollers **34***a* and pads **28** of the tracks. Such movement of the leg **70** will cause control arm **74** to engage switch contact **66** which will energize the alarm **40** to indicate the dangerous attitude of the tractor frame. The downward movement of the leg **70** of the switch assembly will be permitted by virtue of the movable mounting of blocks **80** which will move downwardly together with mounting bolts **82** under the guidance of plates **86.**

Referring now to FIGS. **10** and **11** there is shown safety apparatus including switch assemblies **50***a* in accordance with the present invention used in connection with a crane (not shown) whose body **16** is mounted on a frame **90** which in turn is supported on an "outrigger" jack system generally designated **100.** This type of crane may be normally supported, that is when not in use, on a wheel and axle assembly, (a portion of the wheel **102** being shown in FIG. **10**) rather than a tractor support frame. Jacks **104** which themselves may be conventional are typically supported on base plates **106** which in turn rest on a beam **108** for load distribution purposes.

In accordance with the present invention, switch assemblies **50** a are installed on each base plate **106** with the mounting sleeve **52***a* being fixed such as by welding or otherwise to the upper surface of base plate **106** as shown in FIG. **11.** In the specific embodiment shown, the under side of base plate **106** is recessed at **110** to receive a bearing foot **74***a* fixed to the bottom of leg **70***a* of switch assembly **50***a* as shown in FIG. **11.** Spring **72***a* in support sleeve **52***a* urges leg **70***a* downwardly into engagement with beam **108** as shown in FIG. **11.**

Switch **60***a* of switch assembly **50***a* is secured to support sleeve **52***a* so that it is movable with base plate **106.** During stable attitudes of support frame **90** and outrigging system **100,** the control arms **74***a* and switches **60***a* will be spaced from each other as shown

in FIG. 11. However, should the support frame 90 and the outrigging system 100 shift into an inclined position sufficient to cause one or more of base plates 106 to rise above and separate from the underlying support beam 108, the support sleeve 52*a* will rise together with base plate 106 to thus cause switch 60*a* to approach the associated control arm 74*a*. In this embodiment, the control arm 74*a* will remain in a stationary location since the associated spring 72*a* will urge leg 70*a* downwardly to maintain engagement with beam 108. As the inclination of the support frame 90 increases and the displacement of sleeve 52*a* moving together with base plate 106 increases, switch 60*a* will move into contact with the associated control arm 74*a* to sound the alarm that the attitude of the frame and out-rigger system is dangerous. The crane operator may then redistribute the load L being lifted to restore the support frame and outrigger system 100 to a stable condition where the base plates 106 engage the underlying beams 108 thus causing separation of the switch 60*a* and control arm 74*a* and deactivation of the alarm.

Although in FIG. 10, only one end section of the crane support system has been shown, it will be appreciated that the opposite end of the support system although not shown will contain the same safety switch assemblies 50*a* incorporated in the outrigger jack system at that end.

I claim:

1. In a load lifting apparatus such as a crane mounted on a tractor including a support frame and a pair of endless tracks situated in side-by-side relationship; means for indicating a predetermined inclined position of said support frame including an indicator means capable of issuing a signal, a switch means, and a control arm associated with said switch means, one of said switch means and control arm being fixed with respect to said support frame for movement therewith and the other being mounted on said support frame for movement relative thereto such that when said support frame moves into said predetermined inclined position the control arm will engage said switch means to energize said indicator means for issuing a signal, said switch means being connected to said indicator means to energize the same when engaged by said control arm, and wherein said switch means is fixed to said support frame to be movable therewith, and wherein there is further included spring means biasing said control arm downwardly.

2. The combination defined in claim 1 further including a support sleeve fixed to said support frame and having fixed thereon said switch means, a leg telescopingly received in said support sleeve having fixed thereon said control arm, said leg having a bearing means at its lower end engageable with the lower run of one of the endless tracks, and wherein said spring means biases said leg downwardly into engagement with said endless track.

3. The combination defined in claim 2 wherein said spring means is located in said support sleeve.

4. The combination defined in claim 3 wherein said spring means is a coil compression spring with one end engaged on the upper end of said leg and the other end of the spring engaged in an end wall of said support sleeve.

5. The combination defined in claim 4 wherein said support sleeve has an elongated slot in said one wall thereof and wherein said control arm projects through said slot externally of said support sleeve.

6. The combination defined in claim 5 wherein said switch means has means for adjusting its position along said support sleeve towards or away from said control arm.

7. The combination defined in claim 6 wherein said bearing means on said leg is a roller.

8. The combination defined in claim 7 further including a cover fixed on said wall of said support sleeve to enclose said control arm and said switch means.

9. The combination defined in claim 1 further including a leg urged by said spring means into engagement with the upper surface of the lower run of one of said endless tracks, said leg having fixed thereto said control arm.

10. The combination defined in claim 9 further including a support member fixed to said support frame and having fixed thereon said switch means, said leg being mounted on said support member for movement relative thereto.

11. In combination with a vehicle such as a tractor including a support frame having traction means including an endless track having upper and lower runs and a plurality of rollers rotatably mounted on the support frame and engageable with the lower run of the track; means for indicating a predetermined inclined position of said support frame including an indicator means capable of issuing a signal, switch means connected to said indicator means to energize the same upon actuation of the switch means, and switch actuating means associated with said switch means for actuating the same, one of said switch means and actuating means being fixed with respect to said support frame for movement therewith and the other being engaged on said traction means and also mounted to said support frame for movement relative thereto such that when said support frame moves into said predetermined inclined position the switch actuating means will engage said switch means to energize said indicator means for issuing a signal.

12. A combination defined in claim 11 wherein said switch actuating means is engaged on the lower run of said endless track.

13. The combination defined in claim 12 wherein said endless track has a longitudinally extending race on which said rollers are engaged and wherein said switch means is engaged on said race at a location between an adjacent pair of said rollers.

14. The combination defined in claim 11 wherein said switch actuating means is engaged on one of said rollers and wherein said one roller is mounted for vertical movement relative to said support frame.

15. The combination defined in claim 11 wherein said switch means is fixed to said support frame for movement therewith, and wherein said switch actuating means includes an arm engageable with the switch means and a leg holding said arm and engaged on said traction means.

16. The combination defined in claim 15 wherein said leg contains bearing means at the bottom thereof engageable on the lower run of the endless track.

17. The combination defined in claim 16 further including a mounting sleeve fixed to said frame for movement therewith and having a passage slidably receiving said leg with the leg projecting from the bottom of the

mounting sleeve and engaged on the lower run of said endless track.

18. The combination defined in claim **17** wherein said switch means is fixed to said mounting sleeve.

19. In combination with a tractor including a support frame and a pair of endless tracks situated in side-by-side relationship; means for indicating a predetermined inclined position of said support frame including an indicator means capable of issuing a signal, a switch means, and a control arm associated with said switch means, one of said switch means and control arm being fixed with respect to said support frame for movement therewith and the other being mounted on said support frame for movement relative thereto such that when said support frame moves into said predetermined inclined position the control arm will engage said switch means to energize said indicator means for issuing a signal, said switch means being connected to said indicator means to energize the same when engaged by said control arm, and wherein said switch means is fixed to said support frame to be movable therewith and wherein there is further included spring means biasing said control arm downwardly, and a leg urged by said spring means into engagement with the upper surface of the lower run of one of said endless tracks, said leg having fixed thereto said control arm.

20. In combination with a load lifting apparatus having a support means supporting the apparatus on the ground surface during use; indicating means for issuing a signal indicating a predetermined amount of inclination undergone by the support means as a result of load distribution on the apparatus, said indicating means including an alarm, switch means connected to the alarm to energize the alarm for issuing a signal when the switch means is actuated, a control arm for actuating the swith means, a sleeve associated with said support means to be movable therewith when the support means is inclined during use when the apparatus receives a certain load, said sleeve defining a generally vertical passage and having an open bottom end constituting the end of said passage, a leg slidably received in said sleeve and being movable relative to said sleeve and said support means when the support means is inclined during use when the apparatus receives a load, one of said switch and control arm being fixed to said sleeve for movement therewith and the other of said switch means and control arm being fixed to said leg for movement therewith such that when said support means moves into a predetermined inclined position said control arm will engage said switch means to energize the alarm for issuing a signal.

21. The combination defined in claim **20** wherein said support means includes a tractor having a frame and a pair of endless tracks situtated in side-by-side relationship, a plurality of rollers mounted on said frame for engaging upper sides of lower runs of the endless tracks, means mounting said rollers for vertical movement relative to said frame, and wherein said leg is biased and engageable on said rollers to urge the same towards the lower runs of said endless tracks.

22. The combination defined in claim **21** wherein there is provided four pairs of said switch means and control arm, two pair being associated with each endless track with one pair located adjacent the forward end of the endless track and the other pair located adjacent the rear end of the endless track.

23. The combination defined in claim **20** wherein said support means includes a jack means adapted to be mounted on the ground surface, and wherein said switch means, control arm, and sleeve are mounted in association with said jack means.

24. The combination defined in claim **23** wherein said jack means includes a base member adapted to rest on the ground surface or an underlying load distribution member resting on the ground surface, said base member member having an opening therethrough, said sleeve being fixed to and upstanding from the base member with the open bottom end of the sleeve communicating with the opening in the base member, and wherein said leg projects through the opening in the base member to be engageable on the ground surface or on an underlying load distribution member resting on the ground surface.

* * * * *