Nov. 18, 1924. 1,516,483

B. A. KRAFFT

PNEUMATIC GUN

Filed Nov. 26, 1921

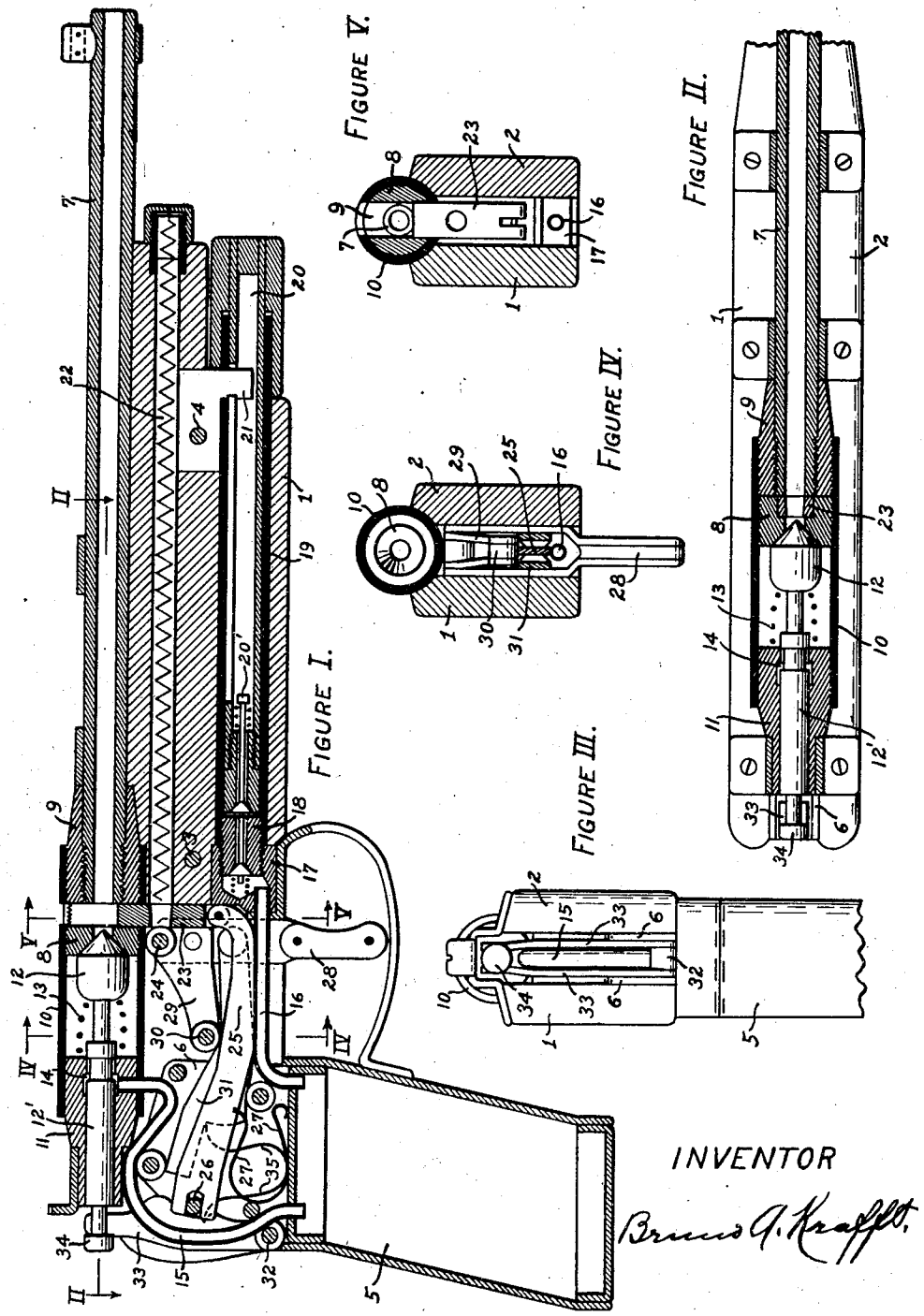

Patented Nov. 18, 1924.

1,516,483

UNITED STATES PATENT OFFICE.

BRUNO A. KRAFFT, OF SAN FRANCISCO, CALIFORNIA.

PNEUMATIC GUN.

Application filed November 26, 1921. Serial No. 517,864.

To all whom it may concern:

Be it known that I, BRUNO A. KRAFFT, a citizen of Germany, residing at San Francisco, county of San Francisco, State of California, have invented a new and useful Pneumatic Gun, of which the following is a specification.

My invention in its broadest aspects is applicable to pneumatic or air guns of almost any type, but as a specific example I have shown and described herein an air gun which has a large supply of compressed air contained in a reservoir, only a small portion of which is used for each shot, and in which the reloading is entirely automatic.

Among the objects of this invention are to produce a gun of this type which may be operated solely by actuation of the trigger, which has the valve mechanism so designed that the compressed air will be released in the shortest possible time and will exert its maximum force upon the shot that is being projected, which may be used with air pressures from only a few pounds to several hundred pounds per square inch, and all parts of which are designed so that they may be manufactured cheaply in large quantities. Guns which use powder have the disadvantage in that they must be carefully cleaned after each shooting to prevent corrosion, can be used with only a fixed charge of powder, and are so noisy as to make indoor target shooting an impossibility, to saw nothing of the smoke and odor which they produce. Most air guns heretofore designed are so inefficient in operation, so inconvenient to manipulate and reload, and so expensive to manufacture that they have done but little to meet the public demand for a gun which is suitable for target shooting in crowded localities and at the same time powerful enough to be useful for small game hunting. It is my object to provide a practical and durable gun which will satisfy all these various requirements. This application is a continuation in part of application Serial Number 456,257, filed March 28, 1921.

A further exemplification of the details of this invention will be found in the accompanying specification and drawings, in which Fig. I is a side view of the gun in longitudinal cross section; Fig. II is a horizontal plan view of the rear portion of the gun, taken on the line II—II of Fig. I; Fig. III is a rear end view, with the lower portion of the handle broken away; Fig. IV is a transverse cross-section on the line IV—IV of Fig. I; and Fig. V is a transverse cross-section on the line V—V of Fig. I.

On the drawing the invention is shown in the form of an automatic pistol, but I wish it to be understood that this is by way of example merely, for it is obvious that the frame parts may be given any desired form.

In the embodiment herein set forth for purpose of illustration, the gun comprises a stock, preferably of wood, made of two lateral sections 1 and 2, secured together by means of screws or other fastening means 3 and 4. The abutting faces of the two sections of the stock are formed with various depressions or concavities to receive the various parts of the operating mechanism, as hereinafter set forth. A hollow handle 5 is secured to this stock by means of fins 6 secured to the upper end of the handle and extending into the slot in the rear end of the stock, the fins being secured to the stock by several transverse pins, some of which also serve to support parts of the operating mechanism to be described hereinbelow.

Seated in the upper edge of the stock is a barrel comprising a tube 7 and a valve seat 8. A bushing 9 is secured to the rear end of the tube 7, both the bushing and the valve seat having external screw threads to fit the internal threads in the front end of the tube 10 which forms a supplemental chamber in communication with the rear end of the barrel. The front face of the valve seat 8 is provided with a diametral slot of rectangular cross-section to receive a reciprocating shot carrier to be described hereinafter, the tube 10 being provided with rectangular openings in registration therewith.

In the rear end of the tube 10 is fixed a bushing 11 forming the rear wall of said supplemental chamber and having a central bore in which is slidably supported the valve stem 12′ with the conical valve 12. A coiled spring 13 constantly urges the valve forwards. Registering annular grooves are formed in the rear bushing and valve stem as indicated at 14, the groove in the valve stem being so positioned that when the valve-stem is in its forwardmost position, with the valve closed, communication will be established between the groove in the

rear bushing and the supplemental air chamber formed by the tube 10, but almost immediately upon retraction of the trigger this communication will be shut off.

A tube 15 leads from the hollow handle 5 and passes through the rear bushing 11 to conduct compressed air to the annular grooves 14 for filling the supplemental chamber.

A tube 16 transmits air into the hollow handle from the pump block 17, into which is screwed a valve plug 18 and on the projecting end of this valve plug is screwed a pump barrel 19. A slotted tubular piston 20 carrying a valve plug on the inner end thereof is slidably mounted within the pump barrel. A plate 21 is clamped between the two halves 1 and 2 of the stock and projects through the wall of the pump barrel 19, through the longitudinal slot in the piston 20, and into the path of the valve 20′ on the inner end of the piston in such a manner that when the piston is near its outwardmost position the plate 21 will open the valve 20′ in the piston 20 and immediately thereafter prevent further outward movement of the piston. As shown on Fig. 1, the slot in the piston 20 is provided with a bayonet joint at the outer end, so that a slight turn of the piston will prevent undesired outward movement thereof.

A magazine tube 22 of usual construction is disposed between the sections 1 and 2 of the stock, and has its inner end flush with the rear end of the tube 7 and bushing 9. A reciprocating shot carrier 23 is slidably mounted in the diametral slot in the front face of the valve seat 8 and has a central transverse shot-receiving opening therethrough, slightly tapered towards the rear. This shot-carrier is preferably rectangular in transverse cross-section, not only to facilitate manufacturing, but also to allow the maximum amount of metal at the sides of the shot-receiving opening. The shot-carrier has pivotally connected to the lower end thereof a lever 25 which extends some distance to the rear and has a bifurcated rear end straddling a transverse pin 26 held in position by the fins 6. A spring 27 is arranged between the handle 5 and the lever 25 so as to press upwardly against the lever at all times and to move the shot carrier 23 upwardly into alinement with the barrel 7 whenever the other parts of the mechanism will permit such movement.

A transverse pin 24 passes through both halves of the stock immediately behind the reciprocating shot carrier 23 and in line with the magazine tube. The pin 24 supports for pivotal movement a manually actuated operating device, such as a trigger 28. The upper portion of the trigger is bifurcated and to the inner face of each fork thereof is riveted a rearwardly projecting arm 29 so as to form a bell-crank lever, the rear ends of the arms 29 being secured together in any suitable manner, as by means of a spacing washer 30. A bar 31 is pivotally connected to each fork of the trigger 28 just below each arm 29, and extends rearwardly. A pin 32 is held in position near the lower rear corner of the stock by the fins 6 and carries a pair of upwardly extending arms 33 for pivotal movement thereon. The upper ends of these arms are disposed on opposite sides of the contracted external portion of the valve stem 12′ and are adapted to engage a forwardly facing annular shoulder 34 to retract the valve and valve stem. The arms 33 are in the same planes as the bars 31. Normally the rear ends of the bars 31 are slightly spaced from the arms 33, but upon retraction of the trigger they come into engagement with the arms just at the time when the shot carrier 23 comes into alinement with the barrel 7. If sufficient force is then applied to the trigger the valve 12 will be unseated and the compressed air will rush down the sides of the conical valve and will impinge with maximum force and velocity against the rear side of the shot. In order to normally maintain the bars 31 and the trigger 28 in forwardmost position, a spring 35 is arranged to bear forwardly against each bar 31, the opposite ends of these springs bearing against the arms 33. The springs 35 should be strong enough to overpower the spring 27, but should, in turn be overpowered by the coiled spring 13 so as to maintain the valve 12 normally closed

The parts are normally in the position shown in Fig. I. The reciprocating shot carrier 23 will then be in its lowermost position with the tapered opening immediately opposite the rear end of the magazine tube 22 so as to receive the last shot of the series. The springs 35 will force the bars 31 and the trigger forwardly and at the same time maintain the arms 29 and the spacing washer 30 in their lowermost position. This spacing washer being in the path of movement of the lever 25, and the springs 35 being strong enough to overpower the spring 27, the lever 25 will be forced down until the trigger can move no further forwards. The spring 13 will at the same time keep the valve 12 closed so that the compressed air will pass from the hollow handle into the supplemental chamber formed by the tube 10 and fill the same.

When the trigger is retracted the arms 29 with their spacing washer 30 will move upwardly and thus allow the lever 25 and carrier 23 to be raised by the force of the spring 27. This will continue until the upper edge of the lever 25 encounters the pin 24, which should occur just when the transverse opening in the carrier 23, with the shot contained

therein, is exactly in line with the barrel 7. Just at this time the rear ends of the bars 31 will encounter the forward edges of the arms 33, so that upon further retraction of the trigger the arms 33 will unseat the valve 12 and allow the compressed air in the supplemental chamber to rush down the tapered opening of the valve in the manner of a jet, the narrowest portion or vena contracta of which will exert the initial impulse against the shot to be propelled forwards. At the same time the rearward movement of the valve stem will shut off communication from the tube 15 and hollow handle 5.

In order to utilize the pressure of the air itself for maintaining the conical valve 12 normally closed, the area of this valve, in axial projection, should be slightly greater than the cross-sectional area of the valve stem. As soon as the valve is opened, however, the air rushing down the front face of the valve will exert a rearward force against it, and thus supplement the action of the trigger. It is also desirable to have a slight amount of lost motion between the upper ends of the arms 33 and the valve stem 12′, so that the valve will be free to snap open as quickly as possible, without having to drag the other parts of the mechanism with it. The spring 13 should be of such strength that the maximum rearward movement of the valve will be just sufficient to allow the air to pass freely through the conical space between the valve and the valve seat.

I claim:

1. An air gun comprising a barrel, a reservoir, a supplemental chamber rigidly connected with the barrel and forming a continuation thereof, a valve controlling communication between the supplemental chamber and the barrel, means for conducting air from the reservoir to the supplemental chamber, a shot magazine, means for transferring shot from the magazine to the barrel, a manually actuated operating device, and means operated solely by actuation of said operating device for successively actuating said shot transferring means and said valve.

2. An air gun comprising a stationary barrel, a reservoir, a shot magazine, an operating device, a valve controlling communication between the reservoir and the barrel, and means operated solely by retraction of said operating device while the barrel remains stationary for moving a shot from the magazine into a position between the barrel and the valve and thereafter opening said valve.

3. An air gun comprising a barrel, a trigger, means comprising a valve operated solely by retraction of said trigger for admitting compressed air into the rear end of the barrel, and a reciprocating shot carrier, rectangular in transverse cross-section and having a tapered opening therethrough operated solely by actuation of said trigger for moving a shot into a position between the valve and the rear end of the barrel.

4. An air gun comprising a stock formed of two lateral sections detachably secured together and with a longitudinal central slot in a vertical plane in the rear portion thereof, a handle formed with two spaced-apart upwardly projecting fins extending into the slot of the stock, transverse pins extending through said stock and through said fins, a barrel mounted on the upper portion of said stock, and operating mechanism supported partly by said transverse pins.

5. An air gun having a stock formed of two lateral sections detachably secured together, a pump carried by said stock, said pump having a slotted piston with a valve at the inner end thereof, a plate held between the two sections of the stock and projecting through the slot of the piston into the path of the valve.

6. An air gun having a stock, a pump carried thereby, said pump having a slotted piston with a valve at the inner end thereof, and a member carried by the stock and projecting through the slot of the piston into the path of the valve.

7. An air gun comprising a stock, a hollow handle, a barrel, a supplemental chamber secured to the rear end of the barrel, a valve controlling communication between the supplemental chamber and the barrel, means connected with said valve for controlling communication between said hollow handle and said supplemental chamber, a pump connected with said hollow handle, a shot magazine, a shot carrier for moving shot from said magazine into a position between said valve and said barrel, a spring pressed lever for actuating said shot carrier, a lever for actuating said valve, a trigger, a spring-pressed bar pivotally connected to the trigger and extending rearwardly therefrom and adapted to engage said valve-actuating lever, and an arm secured to and extending rearwardly from said trigger into the path of movement of said carrier-actuating lever.

8. An air gun comprising a barrel, a reservoir, a supplemental chamber connected with the barrel and forming a continuation thereof, a valve controlling communication between the supplemental chamber and the barrel, means for conducting air from the reservoir to the supplemental chamber, a shot magazine, a shot carrier movable in a plane transverse to the axial line of the barrel for transferring shot from the magazine to the barrel, a manually actuated operating device, and means operated solely by actuation of said operating device for successively actuating said shot carrier and said valve.

9. An air gun comprising a barrel, a reservoir, a supplemental chamber connected with the barrel and forming a continuation thereof, a valve controlling communication between the supplemental chamber and the barrel, means for conducting air from the reservoir to the supplemental chamber a reciprocating shot carrier movable in a plane transverse to the barrel for transferring shot from the magazine to a position between the valve and the barrel, a manually actuated operating device, and means operated solely by actuation of said operating device for actuating said shot carrier and said valve.

10. An air gun comprising a barrel, a supplemental chamber forming an enlarged rearward continuation of said barrel in alinement therewith, said supplemental chamber being provided with a conical valve seat on the end adjacent said barrel and coaxial with said barrel and also with an opening in the rear end thereof in line with the valve seat and barrel, a valve on said valve seat, a valve stem on the valve projecting rearwardly through said opening, said opening having an enlarged portion and said valve stem having a contracted portion arranged so as to form a continuous air passage from said enlarged portion into said supplemental chamber in one position of the valve, and means for admitting air under pressure into said enlarged portion of the opening.

11. An air gun comprising a stationary barrel, an operating member, a compressed air chamber in fixed position relative to the barrel, a shot magazine, a movable valve controlling the communication between the chamber and the barrel, and means controlled solely by the operating member for successively and repeatedly opening and closing said valve and feeding the shot from the shot magazine into position to be projected.

12. An air gun comprising a barrel, a bushing on the rear end of the barrel and provided with a conical valve seat coaxial with said barrel, a tubular casing extending rearwardly from said bushing, a valve on the valve seat, a valve stem projecting rearwardly from the valve, a bushing in the rear end of the tubular casing and provided with a central opening in line with the barrel and adapted to receive the valve stem, a coiled spring surrounding the valve stem and disposed between the valve and the second-named bushing, and means for conducting compressed air through the second-named bushing into the casing.

13. An air gun comprising a barrel, a bushing on the rear end of the barrel and provided with a conical valve seat, a tubular casing extending rearwardly from said bushing, a valve on the valve seat, a valve stem projecting rearwardly from the valve, a bushing in the rear end of the tubular casing, said bushing being provided with an opening therethrough, a stem on the valve and projecting through the opening, a spring surrounding said valve stem and disposed between the valve and the second-named bushing, said second-named bushing being provided with air passages for admitting compressed air into the casing.

14. An air gun comprising a main reservoir, a supplemental chamber, a barrel, and valve mechanism comprising a single valve-operating member adapted, when in one position, to maintain free open communication between the reservoir and the chamber and to shut off communication between the chamber and the barrel, and when in another position to maintain communication between the barrel and the chamber and to completely shut off communication between the reservoir and the chamber.

15. An air gun comprising a barrel, a supplemental chamber in communication with the rear end of said barel, said supplemental chamber being provided with a valve seat on the portion thereof adjacent the rear end of said barrel and also with an opening in the portion opposite said valve seat, said opening being in alinement with said valve seat, a valve on said valve seat, a valve stem on said valve and projecting rearwardly through said opening, said opening having an enlarged portion and said valve stem having a contracted portion arranged so as to form a continuous air passage from said enlarged portion into said supplemental chamber in one position of said valve, means for admitting air under presure into the enlarged portion of said opening, and a spring arranged to force said valve against said valve seat.

16. An air gun comprising a barrel having an enlarged air chamber at the rear end thereof, a valve within the air chamber adapted to close the rear end of the barrel and when in closing position to admit air freely into said chamber through an open passage, and means for retracting the valve to open the rear end of the barrel and when said valve is in retracted position to shut off permanently the admission of air into said chamber.

17. An air gun comprising a barrel having an open outer end adapted to expel a projectile therefrom, an air chamber in communication with the rear end of the barrel, an annular valve seat facing the interior of said chamber and having a hole through the center thereof to allow air to pass from said chamber to said barrel, a valve adapted to normally rest upon said valve seat and shut off communication between said chamber and barrel, a valve stem joined to said valve and having an air-tight slidable fit in and

projecting through a wall of said chamber and terminating externally of said chamber, a forwardly facing shoulder on that portion of the valve stem which is outside said chamber, and mechanical means engaging said shoulder to retract said valve, the effective transverse pressure area of said valve stem being slightly smaller than the effective transverse pressure area of said valve so that the resultant pressure of the air in said chamber will normally force said valve against said valve seat.

18. An air gun comprising a stock, an air reservoir, a barrel, a supplemental chamber secured to the rear end of the barrel, a valve controlling communication between the supplemental chamber and the barrel, means connected with said valve for controlling communication between said air reservoir and said supplemental chamber, a shot carrier for moving shot from said magazine into a position between the valve and the barrel, a spring actuated lever connected to said shot carrier, a trigger, an arm secured to and extending rearwardly from said trigger into the path of movement of said lever, and means actuated by said trigger for opening said valve after the trigger passes beyond a predetermined position.

BRUNO A. KRAFFT.