July 26, 1949. J. L. MAXWELL 2,477,309

SELECTIVE TELEGRAPH STATION CALLING SYSTEM

Filed Oct. 29, 1948

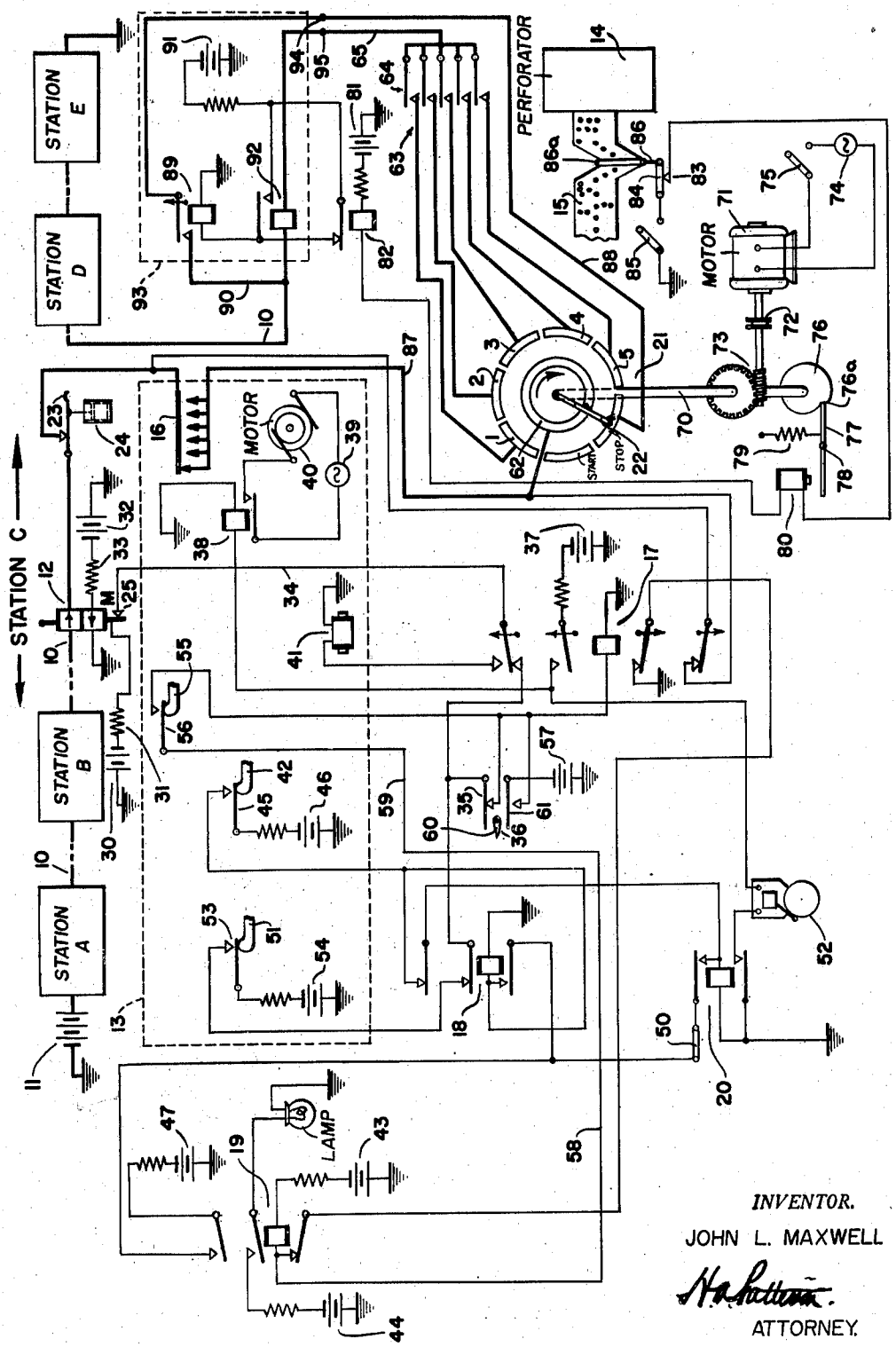

INVENTOR.
JOHN L. MAXWELL
H. A. Sutherland
ATTORNEY.

Patented July 26, 1949

2,477,309

UNITED STATES PATENT OFFICE

2,477,309

SELECTIVE TELEGRAPH STATION CALLING SYSTEM

John L. Maxwell, Redwood City, Calif., assignor to American Telephone and Telegraph Company, a corporation of New York

Application October 29, 1948, Serial No. 57,330

16 Claims. (Cl. 178—2)

1

This invention relates to communication systems and more particularly to telegraph systems wherein a plurality of stations on a common channel may set up connections with each other. The invention is particularly applicable to telegraph transmitters of the type operated automatically by perforated tape or other previously prepared recordings.

In start-stop automatic telegraph systems of the type in which the transmitters are operated by perforated tape, the systems hitherto have been such that when a blank stretch of the tape is fed into the transmitter, the transmitter has nevertheless transmitted a "stop" pulse, repeated each time the tape is sensed by the tape-sensing mechanism.

An object of the invention is to cause the transmitter to suppress the stop pulse, that is, to send a continuous long break signal in response to a blank stretch of the tape.

The invention is particularly useful in a system in which there is provided means at each receiving station adapted to activate a receiver at that station in response to such a long break signal. Thus if the receiver comprises a telegraph printer having a motor for driving it and a selector magnet, there may be provided circuit means at the receiver for starting the motor and coupling the selector magnet to the communication channel, in response to the above-mentioned long break signal.

A stop pulse is a marking pulse, as distinguished from a spacing pulse, used in a start-stop telegraph system to aid in synchronizing the receiver with the transmitter during transmission of messages.

In the art of telegraphy the term "marking" and "spacing" are used to identify two contrasting conditions on the line. Thus in certain telegraph systems, such as the illustrative one to be described herein, means are provided for causing current to flow in the line, or for preventing the flow of current in the line, as by closing and opening the line at a transmitter. In such a system the line may be said to be in a marking condition when current is flowing and in a spacing condition when current is not flowing.

It will be understood that in some other types of systems the terms marking and spacing may have slightly different meanings; for example, in a telegraph system of the polar type, in which the two contrasting conditions to which the receiver is responsive are the flow of current in a first direction and the flow of current in the reverse direction, the terms marking and spacing

2

would refer to the direction of flow of current, rather than to the existence or absence of current.

A telegraph system will be described herein featuring means for successively calling in different stations or groups of stations to which various messages are directed. Thus a whole series of messages may be recorded as perforations on the tape, together with perforations indicating stations to which the various messages are directed, and when the tape is fed into the tape transmitter, a first group of stations will be called in, and the first message will be sent to these stations; then if another message on the tape is addressed to a second group of stations, the system will substitute the second group of stations for the first group of stations and transmit the desired message to the second group of stations. No manual operation is necessary in order to change from one group of stations to another. In such an illustrative system, a long break signal is initially transmitted. This starts the motors and connects the selector magnets of all the stations. A certain code combination, or sequence of code combinations, is then transmitted, which locks in the receivers at the stations to which the first message is to be sent. Another code combination or sequence of code combinations is then transmitted, which turns off the motors and disconnects the selector magnets of the receivers at the stations desired to be excluded from receiving the first message.

At the conclusion of the first message, a long break signal is again transmitted, and thereby the motors and selector magnets of the previously excluded stations are again turned on. A code combination is now transmitted which unlocks the receivers previously locked in, and turns off the motors and selector magnets at all stations. To call in a different group of stations, a long break signal is again transmitted, and the process is repeated. It may therefore be seen that in setting up a call or in terminating a call, it is necessary to be able to transmit a long break signal. The present invention is therefore particularly advantageous since it provides means in the transmitter for transmitting such a long break signal in response to a blank stretch of tape.

In the usual type of tape transmitter, there is transmitted, each time the tape is sensed by the tape-sensing mechanism of the transmitter, a group of pulses including a spacing start pulse, a combination of marking and spacing code pulses, and a marking stop pulse. The expression "code

pulses" will be understood to mean the significant marking and spacing pulses which determine the letter to be printed by the teletypewriters receiving the signal, or the function to be performed by the teletypewriters. Code pulses will be understood to exclude the start pulse and the stop pulse. In the usual tape transmitter the total number of code pulses is the same in each group of pulses. Thus there may be five code pulses, any one of which may be either marking or spacing. The expression "code interval" will be understood to mean the time interval during which the code pulses of one group of pulses are transmitted. Thus if each group of pulses includes a start pulse, five code pulses and a stop pulse, a code interval is the time interval during which the five code pulses are transmitted.

In one embodiment of the invention there is provided in a telegraph transmitter, in combination, a transmission circuit, means for generating and applying to said transmission circuit a signal including marking stop pulses and combinations of marking and spacing code pulses including the blank or all-spacing combination, switching means connected to suppress said stop pulses, a switch actuator, and means for applying said code pulses to the switch actuator. The switch actuator is adapted to actuate the switching means in a direction to suppress the stop pulses in response to successive blank code combinations, or more particularly, in response to successive code combinations including a continuous interval devoid of marking code pulses, said interval being of greater duration than a predetermined value. During ordinary transmission of messages there will occur relatively short intervals devoid of marking code pulses; for example, there may occur, in succession, code combinations such that the latter part of the code interval of the first code combination is blank, and the early part of the code interval of the succeeding code combination is blank. In order that the switch actuator mentioned above may not interrupt the stop pulses during ordinary transmission of messages, the predetermined value of the time interval to which it responds should be greater than any interval between marking code pulses which would normally occur during ordinary transmission of messages.

The above mentioned, as well as other objects, together with the many advantages obtainable by the practice of the present invention, will be readily comprehended by persons skilled in the art by reference to the following detailed description taken in connection with the annexed drawing which respectively describes and illustrates a preferred embodiment of the invention.

There is illustrated in the single drawing a telegraph system including a plurality of serially connected stations such as A, B, C, D and E. Station C is represented by the main body of the drawing. Stations A, B, D and E may be considered to include identical elements corresponding to those which will be described in connection with station C.

Referring now to the drawing, it will be observed that in this illustrative embodiment the various stations are inter-connected, in series, by a line conductor 10, current being supplied to the line at one end by a battery 11 having its negative terminal grounded. The opposite end of the line, near station E, is shown as grounded, thereby completing a series circuit. Each of the stations in the illustrative system includes receiving means and transmitting means. At station C a line relay 12, in response to signals received from other stations, or from the transmitter of station C, controls a teletypewriter 13 which includes means for printing the received messages. The teletypewriter may conveniently be of the general type described in Patent No. 1,904,164, granted April 18, 1933, to Sterling Morton et al. A keyboard perforator 14 perforates tape 15 in accordance with messages to be transmitted and feeds it to a tape-transmitter including a tape-sensing mechanism and a distributor. The tape-transmitter may be of the general type described in Patent No. 2,055,567, granted September 29, 1936, to E. F. Watson. Usually the tape transmitter will be employed to transmit messages, but under some circumstances it may be desired to transmit messages from a manually operated keyboard transmitter, and there is therefore provided a keyboard transmitter 16 as a part of the teletypewriter 13.

At each station there are provided circuit means including relays 17, 18, 19 and 20 which, in response to certain received signals, cooperate to activate or deactivate the receiver, and to perform other functions.

The tape transmitter and its associated elements will be described in detail at a later point, but in order to explain the problem of suppressing the stop pulse and the advantage of suppressing this pulse, the operation of the transmitter which produces this pulse will be briefly stated at this point. The tape transmitter comprises a distributor 21 adapted to open the line, thereby producing a spacing pulse, or to complete a circuit for the line, thereby producing a marking pulse. The distributor 21 has, in the illustrative embodiment, a stop pulse segment, a start pulse segment, five code pulse segments 1–5, and a brush arm 22 which rotates past these segments. One side of the line is constantly connected to the distributor brush arm. The start segment is an open circuited segment, with the result that a spacing pulse is transmitted each time the arm rotates past this segment. Interposed between each of the five code pulse segments and the line is switching means operated by sensing members controlled by the perforated tape. Thus as the commutator arm rotates past the five code segments, a combination of marking or spacing pulses will be transmitted to the line, depending upon the combination of perforated and blank areas present at that instant on the portion of the tape being sensed. In tape transmitters prior to the present invention, the connections between the stop segment and the line have been such that a marking pulse was transmitted by the tape transmitter every time the distributor arm rotated past the stop segment, regardless of what code combinations were fed into the transmitter on the tape. Thus upon receipt of a stretch of blank tape, the transmitter would repeatedly transmit a spacing start pulse, a series of spacing code pulses, and a marking stop pulse.

The present invention provides means associated with the tape transmitter for suppressing the stop pulse when a blank length of tape is fed into the transmitter. Such means causes the transmitter to transmit a continuous break signal in response to a blank length of tape. Since, as has been previously explained, the transmission of a continuous break signal is a necessary step in setting up a call, or in substituting a second group of called stations for a first group of called stations, it may be seen that the present invention is a significant advance

in the art, because in a telegraph system embodying the present invention a tape transmitter supplied with properly perforated tape may set up calls to successive groups of stations, excluding other stations, all without manual aid.

In addition to the previously mentioned apparatus, there is provided at each station a manually operable break key 23. When this key is depressed, the line circuit is opened, and the key is of the slow-return type in order to provide a time delay before the key again closes the circuit. Means for producing such a delay are schematically illustrated as a dashpot 24. Among other uses, the key 23 is useful in sending a long break signal to the line preparatory to setting up a call by means of the keyboard transmitter 16. If the tape transmitter were going to be used, the long break, which turns on all stations, could be sent merely by causing the keyboard perforator to supply the tape transmitter with a series of blank code combinations.

The system will now be described in more detail in connection with a description of the operation of setting up a call. The operation of the relays 17—20, in connection with the teletypewriter 13, in response to signals received by the line relay 12, will first be described.

Setting up a call

Initially, when the line is idle, it is in a marking condition, that is, it is energized. The motors of all teletypewriters are stopped. The sequence of transmitted signals for setting up a call will now be summarized, and then the response of the system to such signals will be described.

First, a long break signal is sent to the line. This may be accomplished either by a break key such as 23, or by a tape transmitter. The long break turns on the motors of all teletypewriters and has other effects.

Second, there is then transmitted to the line a sequence of three code combinations, namely; "Figs," "Blank," and a letter corresponding to the station called. Thus if one wishes to call in station C, one would transmit "Figs-Blank-C." Additional stations may also be called in, so that they all may receive the same message. Among the receivers usually called in is the receiver at the transmitting station, for the reason that it is normally desired to preserve at the transmitting station a record of the messages which have been sent. To call in stations C, D and E, one could transmit "Figs-Blank-C Figs-Blank-D Figs-Blank-E." Actually it is unnecessary to repeat the "Figs," that is, one could satisfactorily transmit "Figs-Blank-C Blank D Blank E." For simplicity, it may for the present be assumed that the only station called in is station C. Therefore the signal transmitted as the second step will be merely "Figs-Blank-C," in the illustration now to be considered.

Third, a sequence of two code combinations is now transmitted to the line, namely, "Figs-S." This sequence turns off the teletypewriter motors at all uncalled stations, excluding them from the call. In designing the system the letter "S" is arbitrarily chosen for this disconnect function. Another letter could have been used instead.

The operation of the system in response to such signals will now be described in more detail.

The line relay 12, which is of the polarized type, is provided with a single contact 25 to which its armature is driven when the upper winding of the relay, which is in series with the line, is energized. There is provided a battery 30 having one terminal grounded and having its other terminal connected through a current limiting resistor 31 to the armature of the relay 12. The lower or biasing winding of the relay is connected in a series circuit with a battery 32 and a current limiting resistor 33. The action of this lower winding, in response to current supplied from the battery 32, is to urge the armature of the relay 12 toward the left, that is, in the spacing direction. Hence whenever the line 10 is opened, the armature of the relay will move to the left, away from its marking contact 25, into a spacing position, thereby disconnecting the battery 30 from the contact of the relay. Normally, when the line is idle, that is, when no messages are being transmitted by any station, the line is energized, and the armature of the relay 12 is in the marking position, against its contact.

When the line is in an idle condition, the relay 17 is energized through a circuit leading from battery 30, through resistor 31, armature of the relay 12, contact 25, lead 34, outer upper armature and front contact of the relay 17, arm 35 and associated contact of switch 36, to winding of relay 17. The relay 19 is energized and the relays 18 and 20 are deenergized when the line is in an idle condition. Operating circuits for these relays will be described subsequently.

Upon occurrence of a long break signal, the line relay 12 moves to a spacing position and deenergizes the relay 17 by opening the previously described circuit at the contact 25 of the line relay 12.

All relays in the illustrative system, with the exception of the line relay 12, are provided with suitable spring means for urging their armatures in a direction away from their pole faces, that is, away from their front contacts and toward their back contacts. This spring means may comprise a portion of the armature itself. The line relay 12 has been described as employing a biasing winding for performing the function approximately equivalent to that performed by the spring means of the other relays.

The relay 17 is of the slow-release type. Its release time is sufficiently great that the relay will not release during spacing intervals occurring during normal transmission of messages. Such spacing intervals may, in some systems, be of the order of one-third of a second, but in order to provide a margin of safety against "hits," the release time of the relay 17 might be approximately 3 seconds. Upon the release of the relay 17, the engagement of its inner upper armature with its back contact completes a circuit from a battery 37 to energize a motor control relay 38. In series with the battery 37 is a current limiting resistor. Similar resistors are connected in series with other batteries of the system, and, for simplicity, will not be mentioned specifically. When the relay 38 is energized, its armature closes a circuit to supply current from a current source 39 to a motor 40 of the teletypewriter 13.

In this manner the motors are started at all stations when a long break is sent to the line.

Release of the outer upper armature of the relay 17 connects the selector magnet 41 of the teletypewriter through the back contact of this armature to the contact 25 of the line relay 12. Hence since the motor 40 of the teletypewriter is now running, and since selector magnet 41 is now responsive to signals in the line, the tele-

typewriter 13 is responsive to line signals. This same condition will exist at all stations.

Prior to the transmission of the long break signal, when the line was idle and the relay 17 was energized, the relay 19 was held energized through a locking circuit including a battery 43, the winding of the relay 19, front contact and lower armature of this relay, inner lower armature and front contact of the relay 17, to ground. When the relay 17 releases in response to a long break signal in the line, as explained above, the locking circuit for the relay 19 will be broken at the inner lower armature of the relay 17, and the relay 19 will therefore release. There is provided a lamp which, when lighted, serves to indicate that the line is busy. When the relay 19 is released by the relay 17 in the process of setting up a call, current is supplied to the lamp from a battery 44, through the back contact and inner upper armature of the relay 19. The lamp remains lighted until the call is terminated and the line is returned to an idle condition.

The teletypewriter 13 at station C is provided with a function lever 42 and is adapted to move this lever upward only in response to receipt of signals comprising in sequence, the code combinations "Figs-Blank-C." The corresponding function lever on the teletypewriter at station D is responsive only to the sequence "Figs-Blank-D." For an explanation of a system adapted to operate a function lever only in response to a sequence of three code combinations reference may be made to Patent No. 2,096,145, granted October 19, 1937, to B. S. Sweezey.

The momentary upward movement of the lever 42 momentarily closes, and thereafter opens, the contacts of a switch 45 which it controls. The relay 20 is energized from a battery 46 through a circuit including the switch 45, back contact and outer upper armature of relay 18, and winding of relay 20, to ground. The relay 20 locks up through a circuit including a battery 47, outer upper armature and back contact of the relay 19, a switch 50, upper armature and front contact of the relay 20, the winding of this relay to ground. The momentary closing of the switch 45 by the function lever 42 also energizes the relay 18 by connecting its winding to the battery 46. The relays 18 and 20 are purposely chosen so that relay 20 operates slightly faster than does relay 18, in order that the relay 20 may lock up before the outer upper armature of the relay 18 disengages its back contact and thereby breaks the circuit from the battery 46 to the relay 20. It will be understood that the lever 42, while operated upwardly only momentarily, will remain in the operated position long enough for both the relays 18 and 20 to operate.

Returning now to the action of the relay 18 following the momentary closing of the switch 45 by the lever 42, it may be noted that the relay 18 locks up through a locking circuit including its winding, front contact and lower armature back contact and outer upper armature of the relay 19, and the battery 47.

It will therefore be seen that at this stage, the result of the transmission of a sequence of code combinations including "Figs-Blank" and a letter indicating the called station, is that the relay 18 is energized at the called station or stations and is not energized at the other stations. The inner upper armature of the relay 18 is therefore out of engagement with its back contact at the called stations. It will be seen in a moment that the significance of this fact is that

the transmission of a sequence of code combinations which actuates a function lever 51 will have no effect at the called stations, but will have the effect at all other stations of stopping the motor 40 of the teletypewriter and disconnecting the selector magnet 41. Another difference between the conditions at the present stage at called and uncalled stations is that at called stations the relay 20 is energized, while at uncalled stations it is de-energized.

The energization of the relay 20 at the called stations completes a circuit for a buzzer or bell 52, including the battery 37, the inner upper armature of the relay 17, which is now engaging its back contact, the buzzer 52, and the lower armature and front contact of the relay 20, to ground. When the buzzer or bell 52 is energized, the operator at the receiving station is thereby informed that the station is about to receive a message. The operator turns off the buzzer 52 by temporarily opening the switch 50, thereby breaking the locking circuit for the relay 20.

In order to turn off the teletypewriter at uncalled stations, the transmitting station now transmits to the line a sequence of code combinations which will actuate the lever 51, momentarily moving this lever into an up position, thereby closing the contacts of a switch 53 controlled by this lever. The identical code combination controls the lever 51 at all stations, by means generally similar to that described in the previously mentioned Morton et al. Patent No. 1,904,164. In the illustration the sequence of code combinations chosen is "Figs-S." It might satisfactorily be other sequences, such as, for example, "Figs-A" or "Figs-Z." As was previously stated, the operation of the lever 51 and the momentary closing of the contacts of the switch 53 has no significant effect at the stations which have been "called" by the previously-described actuation of the lever 42, because the circuit including the contacts of the switch 53 is open at the inner upper armature of the relay 18, this relay having been energized at the called stations.

At uncalled stations, however, the operation of the lever 51 serves to turn off the teletypewriters, in a manner now to be described. At those stations the momentary closing of the switch 53 energizes the relay 17 through a circuit including the battery 54, the switch 53, the inner upper armature and back contact of the relay 18 (this relay being de-energized at uncalled stations), the switch arm 35, its contact, and the winding of the relay 17, to ground. This energizing circuit for the relay 17 is closed only temporarily by the function lever 51, but the relay 17 locks up at all uncalled stations through a locking circuit including the battery 30, armature and contact 25 of the line relay 12, upper outer armature and front contact of the relay 17, switch arm 35 and its contact, and winding of the relay 17, to ground. The relay 17 stays in an energized condition despite the fact that the line relay may move for brief intervals to a spacing condition, because, as stated, the relay 17 is of the slow-release type, and will release only on a long break signal on the line. It is therefore seen that as a result of the transmission of the "Figs-S" signal, the relay 17 is operated at uncalled stations, but remains in a de-energized condition at called stations. When the relay 17 is energized at the uncalled stations, the energizing circuit for the motor control relay 38 is broken at the back contact and inner upper armature of the relay 17. Also, the selector magnet 41 at the uncalled sta-

tions is made unresponsive to line signals since its energizing circuit is broken at the back contact of the outer upper armature of the relay 17.

The call has now been completely set up. That is, teletypewriters are activated at the called stations and are deactivated at the uncalled stations. The transmission of message signals will not affect the teletypewriters at the uncalled stations, since only a long break signal can start their motors and connect their selector magnets to the contact 25 of the line relay 12.

Means are provided for short-circuiting the keyboard transmitters 16 at uncalled stations, thereby preventing the transmission of messages by such keyboard transmitters. This short-circuiting function is performed by the outer lower armature and front contact of the relay 17, which are connected across the terminals of the keyboard transmitter 16. Since the relay 17 is energized at uncalled stations, the keyboard transmitters at these stations are short-circuited.

Terminating a call

In order to terminate a call, two steps are taken. First, a long break signal is transmitted. As a result, at all stations previously excluded, the motors of the teletypewriters are started, and the selector magnets are connected in circuit with the contact 25 of the line relay. As was explained at a previous point, such a break signal produces this effect by opening the locking circuit for the relay 17 at the contact 25 of the line relay 12 for a long enough time so that the slow-release relay 17 will release. When this relay releases, its locking circuit is broken at its outer upper armature and front contact. The release of the relay 17 connects the selector magnet 41 through the outer upper armature and back contact of the relay 17 to the marking contact 25 of the line relay 12, so that the selector magnet and hence the teletypewriter is responsive to signals in the line. The release of the relay 17 also turns on the motor 40 by completing a circuit from battery 37 through the inner upper armature and back contact of the relay 17 and the winding of the relay 38 to ground. When the relay 38 is energized, the motor 40 is connected to its power supply 39.

At the present stage, at all stations, the teletypewriters are on and relays 17, 19 and 20 are released. The relay 18 is on at the previously called stations but off at the previously uncalled stations. The busy lamp is still on.

The second step in terminating a call is the transmission of such a sequence of code combinations as will actuate a function lever 55 at all stations. In the illustrative system, the teletypewriters at all stations are adapted to actuate their respective lever 55 in response to the successive code combinations "Figs.-G." In this respect they are generally similar to the system described in Patent 1,904,164. The lever 55 momentarily moves upwardly, thereby momentarily closing a switch 56 and energizing the relays 17 and 19 through a path including the battery 43, the winding of the relay 19, a lead 58, a lead 59, the switch 56, and the winding of the relay 17, to ground. The relay 17 locks up through its locking circuit previously described, namely, battery 30, armature and marking contact of the line relay 12, outer upper armature and front contact of the relay 17, switch arm 35 and its contact, and winding of relay 17, to ground.

The relay 19 locks up through a circuit including the battery 43, the winding of the relay 19, its front contact and lower armature, the inner lower armature and front contact of the relay 17, to ground. The operation and the locking of the relays 17 stops all the teletypewriter motors and disconnects their selector magnets 41 from the contact 25 of the line relay. The operation of the relay 19 turns off the busy lamp. Corresponding relays of all stations are now in the same condition.

Locally activating teletypewriter at an excluded station

It may sometimes occur that the operator of an uncalled station desires to monitor the signals being transmitted between other stations, in order that he may ascertain their importance relative to a message which he himself may desire to transmit. It is therefore advantageous for the operator of an uncalled station to be able to cause his teletypewriter to be temporarily responsive to the signals being transmitted. To perform this operation, the operator at the uncalled station in question opens the contacts of the switch arm 35 by turning the control arm 60 into an up position momentarily, for an interval sufficient to cause the slow-release relay 17 to release. The release of this relay results from the fact that its locking path through the switch arm 35 is broken. The effect on the relay 17 is the same as the transmission of a long break. That is, when the relay 17 releases, it turns on the teletypewriter motor 40 and causes the teletypewriter selector magnet 41 to be responsive to line signals.

After having monitored the messages for a while, the local operator may turn off his teletypewriter by temporarily rotating the control arm 60 into a down position, thereby causing the switch arm 61 momentarily to engage its contact. This action completes the energizing circuit of relay 17 through a path including the battery 57, the switch arm 61 and its contact, and the winding of the relay 17, to ground. The relay 17 there-upon locks up through its previously described locking circuit from battery 30 and remains locked up, despite operation of the line relay 12 in response to normal messages, since it is of the slow-release type. None of the relays 18, 19 and 20 has been affected by the operation of switch arms 35 and 61, because relays 18 and 20 are energizable only through switch 45 and relay 19 is energizable only through switch 56.

Transmitter

Tape transmitters per se are known heretofore. For a description of a typical tape transmitter reference may be made to Patent No. 2,055,567, granted September 29, 1936, to E. F. Watson. Such tape transmitters receive perforated tape, which has been prepared in a reperforator or keyboard perforator, and depending upon the positions of combinations of perforated and unperforated regions in the tape, the tape transmitter transmits to the line various code combinations. The code combinations normally include a start pulse which is a spacing pulse, five code pulses which may be various combinations of marking or spacing pulses, depending upon the perforations of the tape, and a stop pulse which is a marking pulse. As previously mentioned, in tape transmitters prior to the present invention, the marking stop pulse

has been necessarily transmitted for each code combination. More particularly, even if the tape is entirely blank, that is, even if it includes no code perforations, the stop pulse would still be transmitted at the end of each code combination. It has already been explained why it is desirable for the tape transmitter to be capable of transmitting a long break or spacing pulse to the line, suppressing the stop pulse completely for the transmission of a long break, but transmitting the stop pulse in the usual manner when ordinary code combinations are sent. Thus with a system including receiver-controlling means of the type described, and stop-pulse-suppressing means, if a station desires to transmit a message to a first station or group of stations and then to transmit another message to a second station or group of stations, it is possible to perforate a strip of tape in such a way that the tape transmitter would call in the first station or group of stations, transmit the desired message, deactivate those stations, call in a second station or group of stations, transmit the desired message, repeat the operations until all desired messages have been sent, and thereafter deactivate all stations, all without manual assistance from the operator. In a system including means at the receiver of the type illustrated adapted to control the receiver as described in response to a series of control signals, the transmission of a long break signal is necessary in order to call up stations which have previously been disconnected from the line. It is recalled that such stations are called up in the process of terminating a call. Also, a long break signal is necessary to call up all stations in setting up a call. In order to produce such a long break signal, the tape transmitter to be described includes means which cause the tape transmitter to suppress the stop pulse in response to the appearance of a stretch of tape blank of code perforations.

As shown in the drawing, the tape transmitter, which was briefly described at a previous point, includes a distributor having a solid inner distributor ring **62** and a segmented outer distributor ring, both of which are suitably attached to the upper surface of an insulating disc not shown. The outer distributor ring is divided into seven segments insulated from one another, which include a stop segment, a start segment, and five code pulse segments, numbered **1–5** in the drawing. The stop segment is, in one embodiment, longer than the other segments. Thus the other segments may be of equal length and the stop segment may be approximately 1.4 times as long as one of the other segments. The distributor brush arm **22** continuously engages the inner ring **62**, and successively engages segments of the outer ring with a wiping movement. Connected to the respective segments **1–5** are five contacts **63**. There are provided five contact arms **64**, associated respectively with the contacts **63**. In order to sense the perforations in the tape **15** which is fed to the tape transmitter by the keyboard perforator **14**, there are provided five sensing pins, one for each of the five contact arms **64**, and mechanical linkages from each sensing pin to its contact arm for controlling same. Such sensing pins and linkages are disclosed in the above-mentioned Watson Patent No. 2,055,567, granted September 29, 1936, to which reference is made for more complete details. The contact arms **64** in the drawing of the present application may be considered to represent schematically the entire means which senses the perforations of the tape and which establishes contact between a lead **65**, common to the contact arms, and contacts **63** selected in response to the code perforations. The arrangement is such that when a sensing pin engages a hole in the tape, the arm **64** controlled by that sensing pin engages its contact **63**. The tape **15** is provided with a series of feed holes arranged approximately along the center line of the tape by which it is intermittently advanced by the tape transmitter.

The distributor brush arm **22** is carried by a shaft **70** which is driven by a motor **71** through a friction clutch **72**, and a worm gear drive **73**. The motor **71** is supplied with current from a current source **74** through a manually operable control switch **75**.

In normal operation of the transmitter, it occurs frequently that there is a difference between the rate at which the transmitter operates and that at which the tape is fed from the perforator to the transmitter. It may be seen that if the perforator operation is interrupted, the transmitter will use up all the slack in the tape and would thereafter proceed to damage the feed holes in the tape unless provision were made to stop the transmitter automatically. For the purpose of taking care of the difference between the rates of operation of the transmitter and the perforator, there is fixedly mounted on the main drive shaft **70** a stop cam **76** formed with a peripheral shoulder **76*a***. Associated with the stop cam is a stop arm **77** pivoted at **78** intermediate its ends to a frame member, not shown, one end of the arm **77** being urged to engage the periphery of the stop cam by a spring **79**. The opposite end of the stop arm **77** is operatively associated with a magnet **80** which is employed to rotate the stop arm about its pivot to move it out of engagement with the stop cam periphery when the distributor is to rotate. The magnet **80** is connected in a series circuit with a battery **81**, the winding of a relay **82**, a contact **83**, a contact arm **84** and a manually operable switch **85**, to ground. The arm **84** and the manually operable switch **85** each are adapted to open the series circuit. The arm **84** is controlled by an automatic stop lever **86** having a portion **86*a*** projecting between the transmitter and the perforator so that the tape **15** passes thereunder. When there is a normal amount of slack in the tape **15**, the contact arm **84** engages the contact **83**. Before the tape transmitter is turned on for transmitting messages, both the manually operable switch **75** and the manually operable switch **85** will be open. In starting up the transmitter, the switch **75** is first closed. The motor **71** will then rotate, but the arm **77** will prevent rotation of the distributor shaft **70**. The friction clutch **72** will allow movement of the motor shaft despite the fact that the shaft **70** and worm drive **73** are stationary. When, as the next step, the manually operable switch **85** is then closed, current from the battery **81** energizes the magnet **80**, which attracts the left-hand end of the arm **77**, causing this arm to pivot in a clockwise direction, thereby releasing the stop cam **76**. The distributor then rotates. If the keyboard perforator should stop or lag behind the distributor, the tape **15** would become taut, thereby through the action of the stop lever **86** opening the energizing circuit for the magnet **80** at the contact **83**. When the magnet **80** is de-energized, the arm **77** engages the shoulder **76*a*** of the cam **76**, preventing rotation of the distributor. The motor may continue to rotate because it is coupled to the transmitter through the friction clutch **72**.

Means in transmitter for suppressing stop pulse

The circuit including the stop segment may be traced from the line 10 at the break key 23, through the keyboard transmitter 16, through the lead 87 to the inner ring 62 of the distributor, through the brush arm 22, the stop segment, lead 88, armature and front contact of a relay 89, a lead 90, and out the line 10. It will be noted that this circuit does not include the contacts 63 and the arms 64. It will also be noted that the stop pulse can be transmitted only when the relay 89 is energized. This relay is of the slow-release type. Current to its winding is supplied from a battery 91 through the front contact and armature of a relay 92 or through the armature and back contact of a relay 82. Thus whenever the relay 92 is energized or the relay 82 is released, the winding of the relay 89 is energized.

The winding of the relay 92 is connected in series with the contacts 63, the contact arms 64, the lead 65, and the line 10. It may therefore be seen that the winding of the relay 92 will receive a pulse of current each time a marking pulse is transmitted to the line through one of the segments 1, 2, 3, 4, or 5. The relay 89 in turn receives a pulse of current each time the relay 92 is energized, and therefore the relay 89 will be energized at least once during any revolution of the distributor corresponding to a code combination on the tape having any code perforations whatsoever. The release time of the slow-release relay 89 is greater than the greatest interval normally occurring between marking code pulses during transmission of ordinary signals. As long as a series of code combinations other than blanks is being transmitted, the armature of the relay 89 will remain continuously in engagement with its front contact, and a stop pulse will be transmitted each revolution of the distributor.

If, however, there appears on the tape a blank stretch, that is, a length free from code perforations, the relay 92 will not be energized for a period corresponding to this blank stretch of tape, since code pulses will not appear in the lead 65, inasmuch as all the arms 64 will be out of engagement with their contacts. Provided the period is long enough, the slow-release relay 89 will release. As long as the armature of the slow-release relay 89 is out of engagement with its contact, revolution of the distributor arm over the stop segment will not produce a stop pulse, since as previously mentioned, the stop pulse cannot be transmitted to the line when the relay 89 is in a released condition. It may therefore be seen that the relays 92 and 89 cooperate to produce a long, continuous break or spacing condition on the line in response to a stretch of blank tape being fed from the keyboard perforator to the tape transmitter. The desirability of such operation has been previously explained.

It may be seen that if the distributor is stopped for any length of time, the slow-release relay 89 would tend to release, since there would be no code pulses to energize it via the relay 92, if means were not provided to prevent the release of the relay 89 when the distributor is stopped. The reason that the release of the relay 89 is undesirable when the distributor is stopped is that the brush arm 22 will then be engaging the stop segment, and the release of the relay 89 would open-circuit the line, preventing other stations from transmitting. For the purpose of preventing the release of the relay 89 when the distributor is stopped, the armature and back contact of the relay 82 are connected in parallel with the armature and front contact of the relay 92. Hence, when released, the relay 82 provides a circuit for the energization of relay 89.

Whenever the distributor is rotating, the relay 82 is energized, since its winding is in series with the magnet 80 which controls rotation of the distributor. Therefore when the distributor is rotating, the armature of the relay 82 will be out of engagement with its back contact, and the relay 82 will not affect the relay 89.

When the distributor is stopped by the operator's opening the switch 85 or by the taut tape lifting the arm 84 away from the contact 83, the energizing circuit for the relay 82 is opened. The release of the relay 82 provides an energizing path from the battery 91 by-passing the relay 92 to the winding of the relay 89. The relay 89 is thus maintained energized while the distributor is stopped, thereby providing a circuit from the line 10 through the stop segment, as desired.

It has been stated previously that the release time of the slow-release relay 89 should be greater than the longest interval normally occurring between code pulses of marking nature during transmission of ordinary signals. This is true because the armature of the relay 89 should remain against its front contact, to permit transmission of the stop pulse, at all times except when a blank stretch of tape is fed into the transmitter. It will be understood that the term "code pulses of marking nature" refers only to pulses which have selective attributes, and excludes the stop pulses, which are also of marking nature, but do not enter into selective operations.

With the usual modes of operation of the tape transmtiters of the type previously described, the greatest interval between marking code pulses during transmission of ordinary message signals would occur when there appeared in sequence a first and a second code combination such that only the first pulse of the first code combination and the last pulse of the second code combination is marking, all intervening code pulses being spacing. More particularly, in a tape transmitter having five code segments, such as that illustrated, the longest interval would occur when there appeared on the tape two consecutive code combinations, the first code combination being adapted to position the contact arms 64 so that a marking code pulse is transmitted through only the number 1 segment, and the second code combination being adapted to position the contact arms 64 so that a marking code pulse is transmitted through only the number 5 segment. As a result there would appear an interval devoid of marking code pulses represented by the time required for the distributor brush to rotate one complete revolution, plus the distance from the trailing edge of the number 1 segment to the leading edge of the number 5 segment. Therefore in a system having a tape transmitter of the general type shown in the drawing, the release time of the slow-release relay 89 should be at least equal to approximately the period of one complete revolution of the distributor brush, plus the interval required for the brush to travel from the end of the first code segment to the beginning of the last code segment.

It may therefore be seen that the release time of the slow-release relay 89 may satisfactorily be about twice the time required for one revolution of the distributor, or greater.

The apparatus which suppresses the stop pulse may in some embodiments be referred to as com-

prising a timer. In the circuit of the attached drawing the timer may be considered to comprise the apparatus within the rectangle designated by the reference numeral 93. From the previous description it will be understood that the distributor and the tape sensing mechanism of the tape transmitter are adapted to generate marking stop pulses at a terminal 94 and marking and spacing code pulses at a terminal 95. The line 10 leading to station D, and other portions of the line circuit may be referred to as a transmission circuit. The circuit from stop pulse terminal 94, through the armature and front contact of the slow-release relay 89 and the lead 90 to the line 10 may be termed a stop pulse output circuit, and the circuit from the code pulse terminal 95 to the line 10 may be termed a code pulse output circuit.

In one manner of describing the present invention, it may be stated that there are provided switch means for suppressing the code pulses, such as the armature and front contact of the slow-release relay 89, and an actuator for controlling the switch means. In the illustrative embodiment the armature of the relay 89 is controlled by the winding of that relay, which in turn is controlled by the relay 92. Means associated with the armature of the relay 89, such as spring means, are provided for urging this armature away from its front contact.

Assuming that the slow-release relay 89 is released, the winding of this relay, together with the relay 92 which controls this winding, is adapted upon the occurrence of one or a series of marking code pulses at the terminal 95, to move the armature of the relay 89 into a position to allow transmission of the stop pulse and to hold the armature in that position for a definite period of time following each marking code pulse or following the last of the series of such pulses. Thus the actuator has a delay or timing characteristic. It will be understood that although the timer may advantageously employ a slow-release relay to obtain the desired delay, the timer might employ an actuator comprising an electrical circuit including means for charging or discharging a condenser in order to obtain the desired delay or might employ mechanical delay means.

The timer, or the actuator thereof, will be observed to be responsive to a characteristic of the composite signal generated by the transmitter and appearing at the terminals 94 and 95. Thus if the composite signal is a series of successive code combinations each comprising a spacing start pulse, one or more marking code pulses, and a marking stop pulse, the timer will hold the armature of the relay 89 against its front contact as long as the composite signal has such a wave shape. If the wave shape of the composite signal now changes so that there is applied to the timer a plurality of successive code combinations comprising a spacing start pulse, five spacing code pulses, and a marking stop pulse, the actuator will respond to this new wave shape by moving the armature of the relay 89 into a released position, thereby suppressing the stop pulses. Thus since the actuator responds differently to, or discriminates between, different wave shapes, it may be referred to as comprising a wave shape discriminator.

Also, the actuator may be viewed as responsive to the repetition frequency of the marking code pulses, since it allows the stop pulses to be transmitted only when the marking code pulses are repeated at intervals no greater than a predetermined definite value.

The actuator may also be described as responsive to repeated occurrences of a predetermined code combination. Thus in response to a series of blank code combinations, the actuator is adapted to move the switching means in a direction to suppress the stop pulse.

In conclusion, it may be observed that there has been disclosed, in a telegraph system, apparatus associated with a transmitter, adapted to transmit a continuous break signal in response to a blank stretch of the tape.

Although a particular embodiment of the invention has been shown in the drawing and described in the accompanying specification, it will be understood that the invention is not limited to such specific embodiment but is capable of modification, rearrangement and substitution of parts and elements without departing from the spirit of the invention and within the scope of the appended claims.

What is claimed is:

1. In a telegraph transmitter, in combination, means for generating a signal including stop pulses and code pulse combinations, a transmission circuit, circuit means for applying said stop pulses and said code pulse combinations to said transmission circuit, switching means connected to suppress said stop pulses, and a switch actuator responsive to a characteristic of said signal for actuating said switching means to suppress said stop pulses.

2. In transmitting apparatus of a communication system, in combination, a transmission circuit, means for generating a signal including marking stop pulses and marking and spacing code pulses, a first circuit for applying said code pulses to said transmission circuit, a second circuit for applying said stop pulses to said transmission circuit, a switch connected to suppress said stop pulses when in a first position and to allow said stop pulses to be transmitted when in a second position, means for moving said switch to said first position, an actuator for said switch having a timing characteristic, and means for applying said marking and spacing code pulses to said actuator for energizing same, said actuator being adapted to move said switch to said second position upon being energized by a marking code pulse and to prevent movement of said switch to said first position for a definite period of time following each said marking code pulse.

3. A suppressor of stop pulses in a telegraph transmitter including a transmission circuit and a distributor having a stop segment, a start segment and code segments, said suppressor comprising a slow-release relay having an armature and a front contact in series with said stop segment and said transmission circuit, circuit means in series with said code segments, and means responsive to current in said circuit means for energizing the winding of said relay, said relay having a release timer greater than the greatest interval normally occurring between marking pulses from said code segments during ordinary transmission, whereby blank code combinations release said relay, thereby opening the circuit between said stop segment and said transmission circuit, to cause a long break to be transmitted.

4. A suppressor according to claim 3 including control means for starting and stopping said distributor, and means responsive to said control means for connecting said stop segment to said

transmission circuit when said distributor is stopped.

5. In a telegraph transmitter, in combination, means for generating a signal including marking stop pulses and marking and spacing code pulses, a transmission circuit, circuit means for applying said stop pulses and said code pulses to said transmission circuit, switching means connected to suppress said stop pulses, a switch actuator, and means for applying said code pulses to said switch actuator, said switch actuator being reponsive to the repetition frequency of said marking code pulses and adapted to actuate said switching means in a direction to suppress said stop pulses when the time interval between marking code pulses exceeds a predetermined value.

6. In a start-stop telegraph system, a transmission circuit, a transmitter having a plurality of output terminals and adapted to generate stop pulses at a first of said terminals and code pulse combinations including the blank combination at a second of said terminals, a stop pulse output circuit connecting said first terminal to said transmission circuit, a code pulse output circuit connecting said second terminal to said transmission circuit, and a timer adapted to suppress said stop pulses by opening said stop pulse output circuit at a control point, said timer being responsive to code pulses in said code pulse output circuit and being adapted to maintain said stop pulse output circuit closed at said control point only when marking code pulses are applied to said code pulse output circuit at repetition intervals less than the greatest interval between such pulses normally occurring during ordinary transmission of messages.

7. Apparatus as in claim 6 in which said timer comprises a slow-release relay having its armature and a front contact in series with said stop pulse output circuit.

8. Apparatus as in claim 7 including switching means capable of energizing said slow-release relay, and control means responsive to the operation of said transmitter adapted to control said switching means to energize said slow-release relay when said transmitter is stopped.

9. A suppressor of stop pulses in a telegraph transmitter of the type having a transmission circuit, means for generating stop pulses and combinations of code pulses, and means for applying said pulses to said transmission circuit, said suppressor comprising, in combination, switching means for suppressing the application of said stop pulses to said transmission circuit, an actuator-timer for actuating said switching means, and means for applying said code pulse combinations to said actuator-timer, said actuator-timer being responsive to repeated occurrences of a predetermined code pulse combination for actuating said switching means in a direction to suppress the application of said stop pulses to said transmission circuit.

10. In a telegraph system, a transmitter adapted to generate stop pulses and code pulse combinations including the blank combination, a stop pulse transmission circuit connected to receive stop pulses from said transmitter, switch means connected to suppress the transmission of stop pulses by said circuit, a code pulse transmission circuit connected to receive code pulse combinations from said transmitter, and means coupled to said code pulse transmission circuit adapted to actuate said switch means in a direction to suppress said stop pulses in response to successive blank code pulse combinations.

11. Apparatus as in claim 10 including circuit means responsive to operation of said transmitter adapted to form a conducting path through said transmitter whenever said transmitter is stopped.

12. In a start-stop telegraph system, a transmitter having a first and a second output terminal and adapted to generate stop pulses at said first terminal and code pulses exclusive of the stop pulse but including the blank combination at said second terminal, a transmission circuit having a first branch in series with said first terminal, a second branch in series with said second terminal, and another portion in series with both said branches and both said terminals, switch means for opening said transmission circuit at a point in series with said first terminal, and a control device of a timing type for controlling said switch means, said device being responsive to code pulses in said second branch and being adapted to cause said switch means to open said transmission circuit upon the occurrence of a series of successive blank code combinations in said second branch.

13. In a telegraph transmitter, in combination, means for generating a signal including stop pulses and code pulse combinations, a transmission circuit, circuit means for applying said stop pulses and said code pulse combinations to said transmission circuit, switching means connected to interrupt said stop pulses, actuating means for said switching means, said actuating means comprising a wave shape discriminator, and means for applying at least a portion of said signal to said discriminator, said actuating means being adapted to actuate said switching means in one direction in response to one signal wave shape and in another direction in response to another signal wave shape, thereby controlling the transmission of said stop pulses.

14. In a start-stop telegraph system, a transmission circuit, a transmitter connected thereto, means in said transmitter for generating telegraph signal combinations including the blank code combination, relay means in said circuit energizable in response to the marking pulses of said combinations exclusive of the stop pulse, a circuit by-passing said relay means for impressing stop pulses on said transmission circuit, and a slow-release relay releasable by said relay means after the first blank code combination in any series of blank code combinations for interrupting said by-passing circuit to suppress the transmission of stop pulses and thereby effect the transmission of a continuous break signal.

15. In a telegraph system having a plurality of interconnected stations, each of said stations having a printer-receiver, a motor for said printer-receiver, and a transmitter adapted to generate and transmit a signal including marking stop pulses and marking and spacing code pulse combinations, in combination at each of said stations, means at said receiver for stopping said motor in response to a long break signal, switching means at said transmitter, an actuator for said switching means, said switching means being connected to be capable of interrupting transmission of said stop pulses, and means for applying to said actuator at least a portion of said generated signal including said code pulses, said actuator being adapted to actuate said switching means in a direction to interrupt said stop pulses upon receiving a definite number of successive spacing code pulses, said number being at least as great as the greatest number of successive

spacing code pulses occurring during normal transmission of messages.

16. In a telegraph tape transmitter, apparatus for transmitting a long break signal to a line in response to the receipt of blank tape by said transmitter, said apparatus comprising, in combination, a rotary distributor including a brush arm, a start segment, a stop segment, and a plurality of code segments, said distributor being adapted to generate, each revolution, a spacing start pulse and a marking stop pulse, and to generate marking code pulses corresponding to any perforations in the tape and spacing code pulses corresponding to blank portions of the tape; a circuit for transmitting stop pulses from said distributor to said line; a slow-release relay

for opening said circuit; means for transmitting marking and spacing code pulses from said distributor to said line; and a second relay responsive to marking code pulses passing through said last-mentioned circuit, said second relay being adapted to energize said slow-release relay upon the occurrence of a marking code pulse, said slow-release relay having a release time at least equal to approximately the period of one complete revolution of said distributor plus the interval required for said brush arm to travel from the end of the first code segment to the beginning of the last code segment.

JOHN L. MAXWELL.

No references cited.