Oct. 21, 1941. B. H. SMITH, JR 2,259,863

DISPENSING DEVICE

Filed Aug. 11, 1939

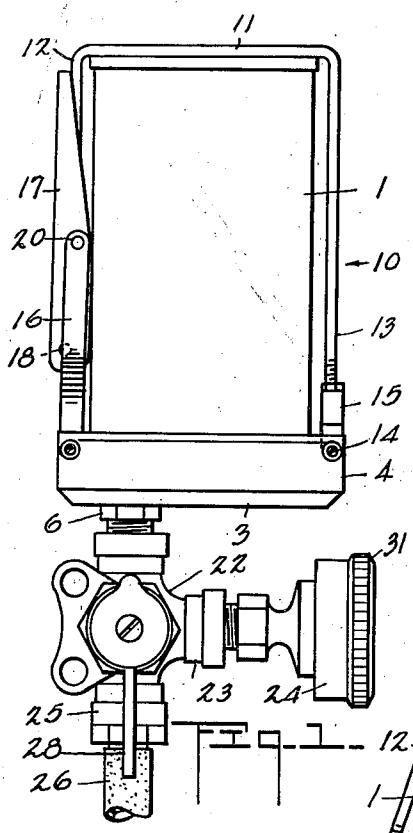

Fig. 1

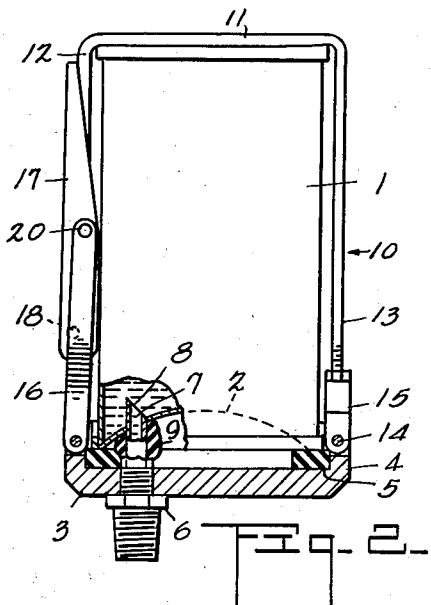

Fig. 2

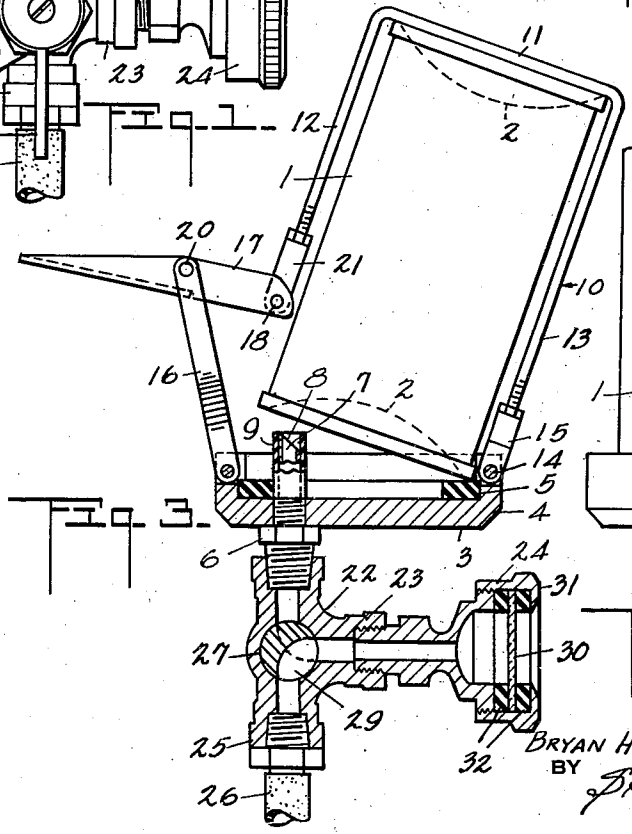

Fig. 3

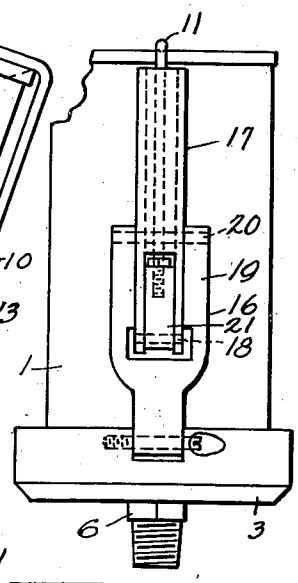

Fig. 4

INVENTOR

BRYAN HOOKER SMITH, JR.

BY Scrapp & Cole.

ATTORNEYS

Patented Oct. 21, 1941

2,259,863

UNITED STATES PATENT OFFICE

2,259,863

DISPENSING DEVICE

Bryan Hooker Smith, Jr., Berkeley, Calif., assignor to Braun-Knecht-Heimann Co., a corporation of California

Application August 11, 1939, Serial No. 289,613

2 Claims. (Cl. 221—23)

The present invention relates to improvements in dispensing devices and its principal object is to provide a means whereby poisonous gases may be dispensed from a tin can or similar receptacle in a simple manner and without danger to the operator.

More particularly the invention was developed as a special dispensing means for methyl bromide, an extremely poisonous substance which is sold in the market in tin cans in liquid form and which turns into gas immediately upon release from the can and discharges therefrom under great pressure. The gas is used for fumigating purposes and also for the extermination of rodents, such as squirrels, the operator moving from hole to hole and discharging a preferably predetermined amount of gas into each hole.

It is proposed in the present invention to provide a dispensing device that may be readily attached to the can and that during the attaching operation pierces the can and connects the contents thereof to a suitable outlet conduit, such as a hose or the like.

It is further proposed to construct the device in such a manner that during or even immediately prior to the piercing operation a seal is automatically formed around the hole so that there is no danger of gases escaping while the device is being attached.

It is further proposed to provide attaching means extremely quick in action so that the piercing and sealing operation is practically instantaneous and the danger of gases escaping is reduced correspondingly.

And finally it is proposed to provide suitable control means for the discharge of the gases, whereby the latter may be discharged in measured quantities through a metering chamber, the control means being arranged so that there is never a direct connection between the main supply in the can and the atmosphere.

Further objects and advantages of my invention will appear as the specification proceeds and the novel features thereof will be set forth in the claims hereto appended.

The preferred form of my invention is illustrated in the accompanying drawing, in which:

Figure 1 shows a side elevation of my device as attached to a can;

Figure 2, a similar side elevation of a portion of the device with the metering chamber and valve omitted, parts being shown in section;

Figure 3, a similar side elevation, with parts shown in section and with the can illustrated in a position preparatory to the piercing operation; and

Figure 4, a side elevation of the device taken at right angles to that of Figure 2.

While I have shown only the preferred form of my invention, I wish to have it understood that various changes or modifications may be made within the scope of the claims hereto attached without departing from the spirit of the invention. Particularly, while only one particular use of the invention is described in the present specification, it is apparent that the invention will lend itself to many different uses.

Referring to the drawing in detail, the can 1 may be of any suitable manufacture and is here illustrated as a cylindrical can having dished ends 2 which are of no particular moment for the purposes of this invention.

My device comprises in its principal features a cap 3 having a rim or flange 4 adapted to receive one end of the can and being provided with a washer 5, which engages the rim of the can to form a gas-tight seal therewith when the can is in position.

The cap has a hollow fitting 6 threaded into the bottom thereof, the fitting terminating inside the cap, in a puncturing tube 7. The latter is cut, at its upper end, along a tapered line, as shown at 8, so as to come to a point and arranged to cut into the cap. The hole made in the can substantially corresponds to the outer diameter of the tube, although it will be slightly larger and out of shape due to the angular movement of the can as will be hereinafter described. It should be noted that the puncturing device is placed relatively near the rim of the cap but sufficiently far away to clear the washer 5.

The projecting end of the fitting, which forms the puncturing element, is surrounded by a sleeve-like washer 9 which is of at least the same length or preferably a little longer than the puncturing element so that the washer engages with the end of the can before the puncturing element becomes active and forms an effective seal with the can end around the section to be punctured.

For attaching the can to the cap, I provide a yoke 10 fitting over the can and having an end member 11 and two side members 12 and 13. The latter is pivoted to the rim of the cap as at 14, through a suitable bracket 15, with freedom of swinging motion in a radial plane. The pivot 14 is arranged diametrically opposite the puncturing element 7.

The side member 12 is somewhat shorter than

the other side member and is spaced therefrom by the width of the cap. It is connected to the opposite side of the rim by means of a bracket or link 16 and a lever 17 which latter is fulcrumed in the lower end of the side member 12, as at 18, and has an intermediate portion pivoted to the link 16 as at 20.

When the lever is in substantially horizontal position, as in Figure 3, the yoke tilts relative to the cap and allows of insertion of the can, and when the end of the lever is thrown upward into a position substantially vertical, it draws the side member 12 downward and causes both the yoke and the can to move into rectangular position with respect to the cap.

The lever 17 is preferably made channel-shaped so that it straddles the side member 12 when in end position for holding the can, and the link 16 branches into a fork 19 (see Figure 4) which straddles the lever 17 in end position and allows the pivot 20 to go somewhat beyond the fulcrum 18 for locking the lever against reverse motion. The lower end of the side member 12 terminates in a block 21 which makes a sliding fit with the channel-shaped lever 17.

When the can is made to descend from the position shown in Figure 3, its bottom face strikes the puncturing member 7 and is pierced thereby, the washer 9 sealing off the section to be punctured before the puncturing commences and receding during the operation.

At the end of the operation the entire rim of the can is firmly pressed upon the washer 5, which then forms a second seal preventing gases from escaping except through the fitting 6.

The latter fitting connects with a three-way valve housing 22 which has an outlet 23 connecting with a metering chamber 24 and a second outlet 25 connecting with a suitable conduit 26 leading to the place of application.

A valve 27 in the housing, operable by a handle 28 has a port 29 adapted to establish communication between the fitting 6 and the metering chamber in one position and between the metering chamber and the conduit 26 in another position. The metering chamber is closed by a transparent window 30 held in place by a cap 31 and suitable washers 32.

In operation, the yoke 10 is first swung into tilted position, as shown in Figure 3, by operation of the lever 17, whereupon the can is inserted. Next the free end of the lever 17 is pressed upward, which causes the yoke and the can to come downward and which causes the puncturing member 7 to enter the can, while the washer 9 forms a sealing means around the puncturing member. Towards the end of the operation, the rim of the can bears on the washer 5, which forms a second sealing means.

The device is now ready for use and the operator may now turn the valve to alternately fill and empty the metering chamber 24.

I claim:

1. In a dispensing device for a can or the like, a wire yoke adapted to fit over one end of the can and having legs extending alongside of and parallel to opposite sides of the can, a cap adapted to fit over the other end of the can and having an annular flange and a washer confined within the flange, means for pivotally connecting one section of the flange to one of the legs of the yoke, a lever mechanism comprising a lever pivoted to the other leg and a link connecting an intermediate portion of the lever and an opposite section of the flange, the lever mechanism and the pivotal connection being operable for drawing the cap and the washer upon the can for air-tightly sealing the second end thereof, and a piercing element carried by the cap for piercing the latter can end while the lever mechanism is operated.

2. In a dispensing device for a can or the like, a wire yoke adapted to fit over one end of the can and having legs extending alongside of and parallel to opposite sides of the can, a cap adapted to fit over the other end of the can and having an annular flange and a washer confined within the flange, means for pivotally connecting one section of the flange to one of the legs of the yoke, a lever mechanism comprising a lever pivoted to the other leg and a link connecting an intermediate portion of the lever and opposite section of the flange, the lever mechanism and the pivotal connection being operable for drawing the cap and the washer upon the can for air-tightly sealing the second end thereof, and a piercing element carried by the cap for piercing the latter can end while the lever mechanism is operated, the piercing element having a washer therearound for sealing the hole in the can end made thereby.

BRYAN HOOKER SMITH, JR.