Jan. 18, 1955 J. R. WINEGARD 2,700,105

T. V. ANTENNA ARRAY

Filed July 26, 1954 2 Sheets-Sheet 1

Fig. 1

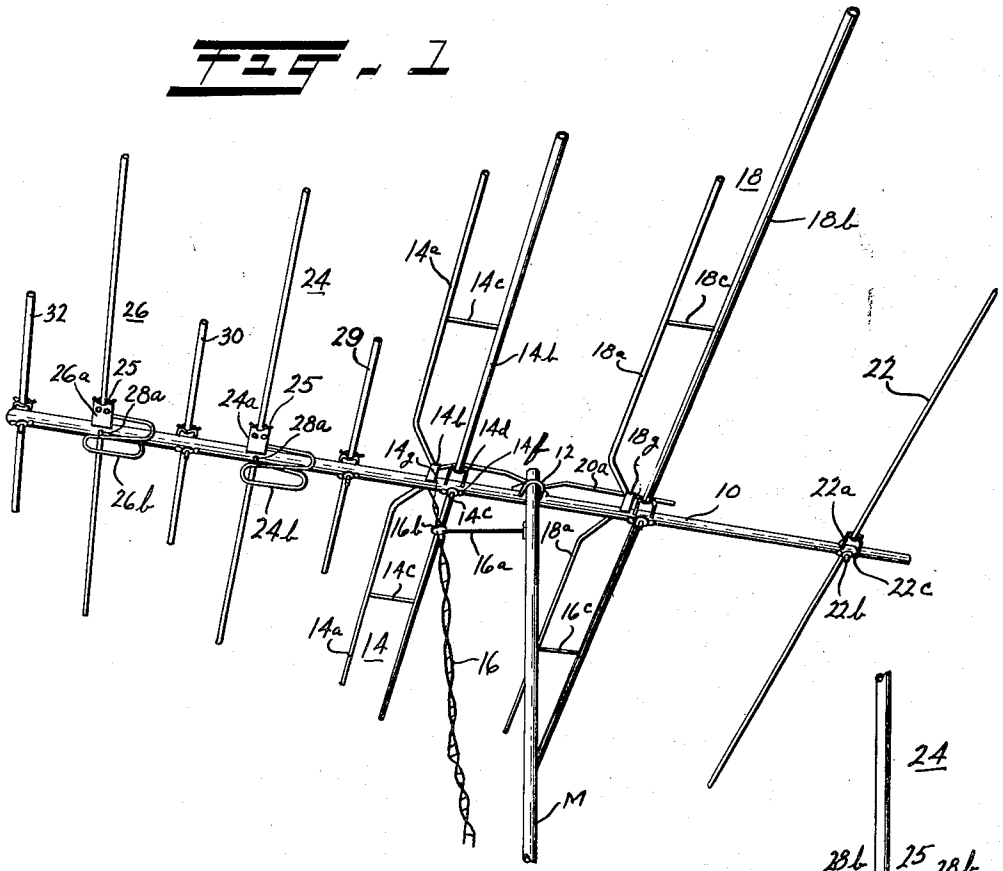

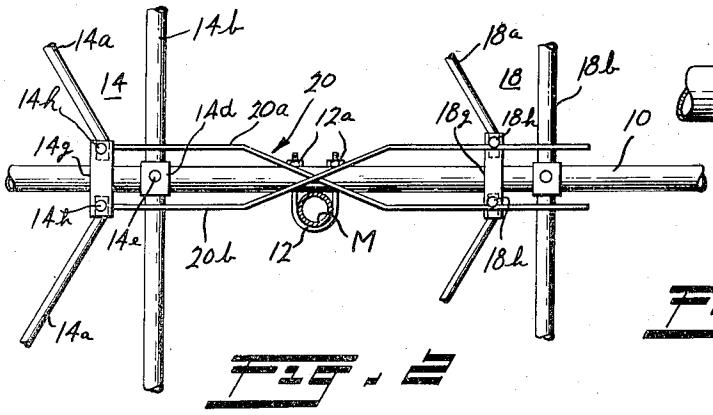

Fig. 2

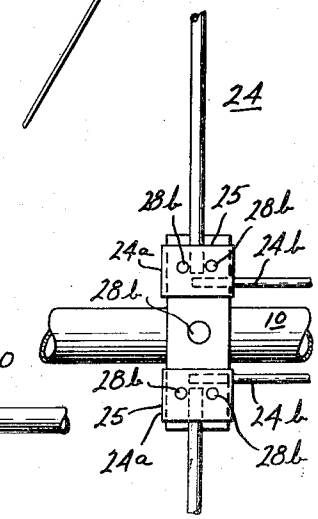

Fig. 3

INVENTOR.
John R. Winegard
BY
Bair, Freeman & Molinare
Atty's.

Jan. 18, 1955 J. R. WINEGARD 2,700,105

T. V. ANTENNA ARRAY

Filed July 26, 1954 2 Sheets-Sheet 2

Fig. 4

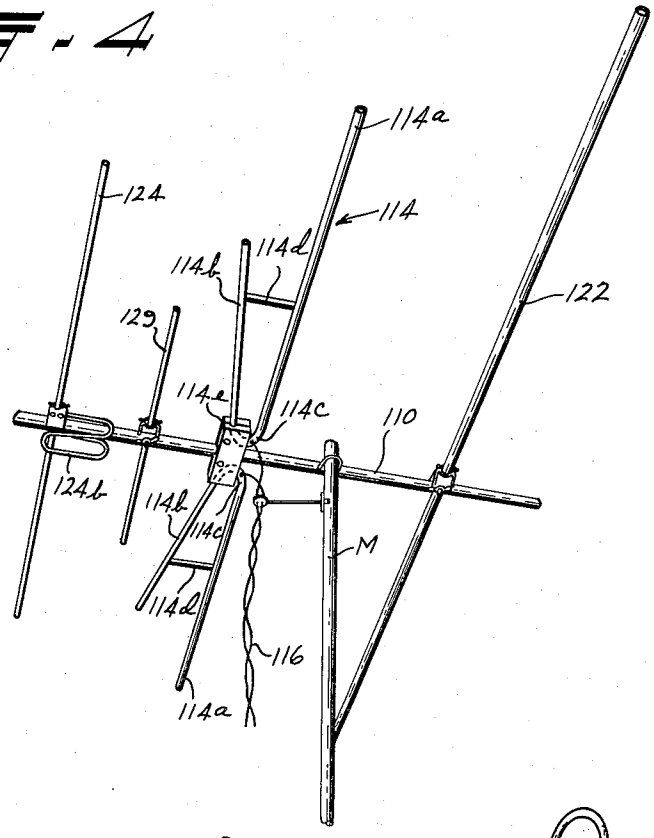

Fig. 5

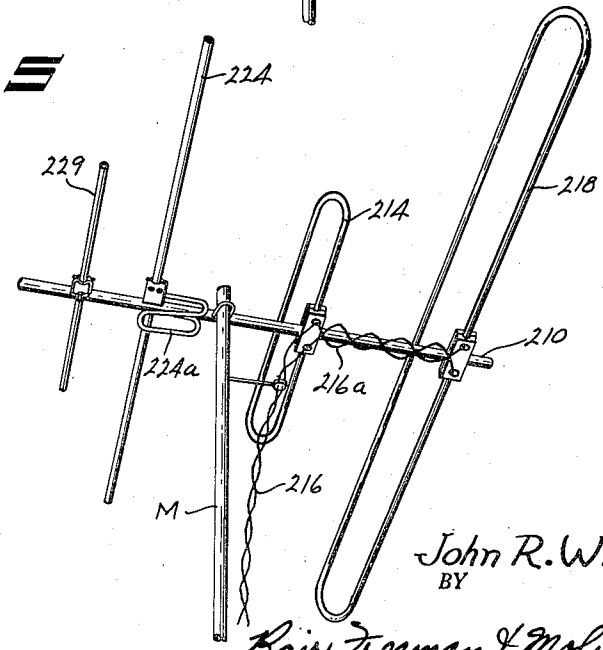

INVENTOR.
John R. Winegard
BY
Bair, Freeman & Molinare Attys.

United States Patent Office

2,700,105

Patented Jan. 18, 1955

2,700,105

TV ANTENNA ARRAY

John Robert Winegard, Burlington, Iowa, assignor to Winegard Company, Burlington, Iowa, a corporation of Iowa

Application July 26, 1954, Serial No. 445,670

9 Claims. (Cl. 250—33.51)

My invention relates to an improved antenna for television reception.

Antennas for use in television reception must have a wide band characteristic giving good response over both the low frequency (54–88 megacycles) television band and the high frequency (174–216 megacycles) television band. In addition, such antennas—particularly those used in locations remote from television transmitting stations—must have a high response or gain in order that the relatively weak signals from the transmitter may be effectively received.

In accordance with the disclosure of the present application, these objectives are achieved in a structure which utilizes a driven element in conjunction with a coplanar director array located in front of this element. The director array consists of dipoles approximately one-half wave in length at a frequency in the high frequency band and connected together by a folded transmission line. The latter acts as an inductance in the low frequency band to cause the dipole to act as a simple director in the low frequency band of less than one-half wave in length. These dipoles are spaced from the driven dipole elements and from each other and are coplanar with the driven element. In addition to these dipole directors, the antenna includes a series of unitary directors located in parallel, aligned, coplanar relationship with the driven elements and with the dipole directors. These unitary directors are located approximately midway between the dipole directors and at like distances in front of the front director and in back of the rear director. Each of the unitary directors is approximately the same length as one arm of the dipole directors and resonates as a one-half wave unit at a frequency somewhat below the low frequency end of the high frequency band.

It is therefore a general object of the present invention to provide an improved antenna suitable for television reception.

A further object of the present invention is to provide an improved antenna suitable for television reception and characterized by high sensitivity extending over the full television frequency range of 54–88 megacycles and 174–216 megacycles.

Further it is an object of the present invention to provide an antenna of the above type utilizing an inline construction; having low wind resistance; having low cost; having minimum weight; and having a maximum degree of simplicity and reliability.

Additionally, it is an object of the present invention to provide an improved director system for a television antenna and effective over both the 54–88 megacycle band and the 174–216 megacycle band.

The novel features which I believe to be characteristic of my invention are set forth with particularity in the appended claims. My invention itself, however, both as to its organization and method of operation, together with further objects and advantages thereof, will best be understood by reference to the following description taken in connection with the accompanying drawing in which:

Figure 1 is a view in perspective of a television antenna constructed in accordance with the present invention.

Figure 2 is an enlarged fragmentary top plan view of the support post and adjacent portions of the antenna structure;

Figure 3 is a view still further enlarged and showing the central portions of a dipole director and the adjacent portions of the support bar;

Figure 4 is a view in perspective of another television antenna having director elements constructed in accordance with the present invention; and,

Figure 5 is a view in perspective of still another antenna utilizing the director elements of the present invention.

Referring now to the drawing, the antenna is supported by a mounting mast M which extends in vertical direction and is supported by suitable means (not shown). At the top of the mast M, a horizontal mounting bar **10** is affixed by any suitable means. In the structure shown, the bar **10** is held in place by the U-boat **12** which is received in the bar **10** and is drawn tight by suitable nuts **12***a*, Figure 2, to anchor the mounting bar **10** rigidly in place. As shown in the figures, the various antenna elements are affixed to and supported by the bar **10**.

The front driven element is shown generally at **14**. This element consists of a forward dipole portion defined by arms **14***a* and a rear unitary portion defined by the continuous bar **14***b*. As shown, the dipole arms **14***a* are connected to the unitary bar **14***b* by the rearwardly extending arms **14***c*, each of which is connected to the dipole arm **14***a* at approximately the mid-point of its length and extends rearwardly in direction parallel to the bar **10**. The rear unitary bar **14***b* is affixed to the support bar **10** by a saddle bracket **14***d* which embraces bar **10** and forms a partially cylindrical seat for bar **14***b*. The bar **14***b* is held tightly against the bracket **14***d* and the latter is held tightly on bar **10** by bolt **14***e* and thumb nut **14***f*.

The adjacent ends of the dipole **14***a* are joined by spacer **14***g* which is of insulating material, such as Bakelite and has terminal posts **14***h* to receive the ends of the open transmission line **16** which are received in the terminal posts and are drawn to tight seating relation by the terminal posts. This transmission line is held adjacent the binding posts **14***h* by the arm **16***a* which is affixed at one end to the mast M and at the other end has an insulating sleeve **16***b* which receives the transmission line.

A similar driven element **18** is located rearwardly on bar **10** in relation to the unit **14**. The unit **18** is of like construction using dipole arms **18***a*, a unitary bar **18***b* extending parallel to and in line with the elements and a pair of connecting bars **18***c* approximately midway on the dipole elements and extending parallel to the support bar **10** between the dipole elements **18***a* and the unitary rear element **18***b*. The dipole elements **18***a* are likewise connected at their adjacent ends to the insulating spacer **18***g* which has binding posts **18***h* to receive the open transmission line **20** defined by conductors **20***a* and **20***b* which is received on the binding posts **14***h* at its front end and receives the binding posts **18***h* at its rear end.

The forward driven element **14** is of such length as to receive most efficiently in the high frequency television band of 174–216 megacycles. In this frequency range the transmission line **20**, including the stub portions outboard of element **18**, acts as a one-half wave open line to present a very high impedance across the transmission line **16**. The rear driven element **18** is of length to receive most efficiently in the low frequency television band of 54–88 megacycles. In this frequency range the transmission line **20** acts as a non-resonant line.

Rearwardly of the unit **18**, there is provided a reflector **22** which consists of a unitary bar extending parallel to and in coplanar aligned relationship with the units **14** and **18**. This bar is attached to the support bar **10** by the saddle **22***a* and by the anchor bolt **22***b* and thumb nut **22***c* as shown.

Forwardly of the driven element **14** a pair of dipole directors **24** and **26** respectively are provided. These directors are carried from the support bar **10** by the insulating blocks **24***a* and **26***a*, respectively, each block being seated on the support bar **10** and held snugly thereon by a bolt **28***a*. At its top face, each block **24***a* and **26***a* has a pair of conducting clamp pieces **25**, Figure 3, which are held snugly down on the arm of the dipole **24** by bolts **28***b* which protrude beneath the block. Each block **24***a* and **26***a* also receives the ends of the coupling unit **24***b* or **26***b* as the case may be, thus establishing an electrical contact between the coupling unit and the di-

rector. These coupling units are in the form of folded closed resonant lines as shown.

The arms of dipoles **24** and **26** are made slightly shorter than the arms of dipole **14***a*. The resonant lines **24***b* and **26***b* are resonant, in conjunction with the capacitance of the adjacent parts such as bar **10**, at approximately the frequency at which the dipoles **24** and **26** are half wave in length. Thus, at these frequencies the dipole arms are effectively disconnected. However, at lower frequencies the lines **24***b* and **26***b* do not function as resonant lines but rather as short-circuiting connections with some inductive effect thus causing the dipoles **24** and **26** to act as unitary directors in these frequence ranges and to appear to have a somewhat lower natural resonant frequency than their physical length would indicate.

A series of three unitary directors **29**, **30**, and **32** are likewise mounted on the support arm **10** in positions straddling the dipole directors **24** and **26**. As shown, these directors are mounted on the support bar **10** in the same fashion as reflector **22**, that is, by the use of a saddle and an appropriate mounting bolt. The directors **29**, **30**, and **32** are approximately the same length as the arms of the respective dipoles **24** and **26**. Moreover, the directors **29**, **30**, and **32** are spaced from dipoles **14***a*, **24** and **26**, by approximately the same distances so that directors **29** and **30** are substantially midway between the respective dipoles and director **32** is about the same distance in advance of the dipole **26**.

In an actual television receiving antenna constructed in accordance with the present invention the following dimensions were used:

Length of director **32**	24 inches.
Distance between director **32** and dipole **26**	6¼ inches.
Length of each arm of dipole **26**	25 inches.
Length of resonant line **26***b*	18 inches (to give an antiresonant frequency of about 180 megacycles).
Distance between dipole **26** and director **30**	6¾ inches.
Length of director **30**	25 inches.
Distance between director **30** and dipole **24**	5½ inches.
Length of resonant line **24***b*	18 inches (to give an antiresonant frequency of about 180 megacycles).
Distance between dipole **24** and director **29**	7 inches.
Length of director **29**	25¾ inches.
Length of dipole arms **14***a*	25 inches.
Distance between director **29** and the parallel portions of dipole arms **14***a*	4 inches.
Length of arms **14***c*	4 inches.
Length of bar **14***b*	70 inches.
Length of transmission line **20**	28 inches.
Length of dipole arms **18***a*	38 inches.
Length of bars **18***c*	4 inches.
Length of bar **18***b*	99 inches.
Length of reflector **22**	110 inches.
Distance between reflector **22** and bar **18***b*	24 inches.

An antenna constructed in accordance with the above dimensions has been found to give good response over the entire television frequency range with an average gain of about 6 decibels over a simple dipole.

It will be observed that the antenna above described is an antenna wherein all of the antenna elements lie in a common plane. This provides a desirably low wind resistance. It also makes it possible to mount the antenna parts on the common support bar **10**. In addition, the antenna is of rugged construction and is simple in design, features which contribute to its general usefulness.

In the antenna above described it has been found possible to receive all television bands without difficulty. The directional characteristics are approximately those of a dipole with a single reflector so that the antenna displays a substantial degree of directivity without being unduly critical.

The spacings between the various elements of the antenna of Figure 1 may be adjusted to vary the antenna characteristics such as the impedance as seen by the transmission line **16**. Within reasonable limits these spacings are not critical although for normal television use approximately the proportions of Figure 1 are preferred.

The characteristics of the resonant elements **24***b* and **26***b* are greatly influenced by the capacitance effects of the adjacent parts, particularly the support arm **10** which is of metal such as aluminum. The capacitance resulting from this arm together with the capacitance of the hardware such as the clamps **25**, causes these resonant elements to resonate at a frequency considerably lower than their length would indicate. This is a highly desirable feature of the structure of the present invention since the inductive reactance of these elements in the low frequency band is lower than would otherwise be the case. As a consequence of this lower inductance the units **24** and **26** effectively act as directors in the full 54–88 megacycle band. Were it not for this effect, the director action of these elements would be lost near the high frequency end of this band, and, indeed, these elements might even act as reflectors and defeat their purpose.

The action of the directors **24** and **26**, in conjunction with directors **29**, **30** and **32** can be regarded as that of a high band director system using elements **29**, **30** and **32** interposed on a low band director system using elements **24** and **26**. However, the action of the coupling units **24***b* and **26***b* is to avoid the shielding effect otherwise associated with directors **24** and **26** and to cause these directors to give some director action in the high frequency band. At the same time, however, the coupling units **24***b* and **26***b* provide a degree of inductive reactance at the low frequency band and thus give rise to good director action in that band even though the length of directors **24** and **26** would otherwise be too small at the high frequence end of that band.

Figure 4 shows an alternative antenna structure using a director system constructed in accordance with the present invention. In this system the mast M carries a support bar or boom **110** which in turn carries reflector **122**. Forwardly of the reflector there is provided a two band driven element **114** of the type described and claimed in my copending patent application entitled "Dual Band Antenna," Serial No. 446,010, filed July 27, 1954. In brief, this driven element consists of a pair of spaced colinear dipole arms **114***a* of length to operate effectively in the low frequency band. A pair of forward angled dipole elements **114***b* are mounted at the inboard ends of dipole elements **114***a* by means of the connecting and supporting arms **114***c* and **114***d*. The entire unit is affixed to the boom **110** by an insulating support **114***e* as described more particularly in the above-identified application. Transmission line **116** is connected to the inboard ends of the arms **114***a* as shown.

The arms **114***d* are so positioned on the dipole arms **114***b* and **114***a* as to define—in conjunction with the outboard portions of these dipole arms—a half wave open circuited resonant transmission line in the high frequency band. This reflects a very high impedance which causes the portions of arms **114***a* and **114***b* inboard of arms **114***d* to operate substantially independently of the outboard portions in the high band, thus giving rise to action similar to that of a simple half wave dipole.

The boom **110** receives director **124** forwardly of the driven element **114**. This director is like director **24**, Figure 1, and includes a coupling line **124***b* to give the dual band action described above in connection wtih director **24**. The director **129**—constructed like director **29**, Figure 1—is interposed between director **124** and the driven element **114**.

In operation, the two arms of director **124** are effectively disconnected in the high frequency band and the director **129** operates as a director, while the driven element **114** operates in generally the same manner as if it consisted only of the portions inboard the arms **114***d*. In the low band the director **124** operates as a director with the coupling **124***b* contributing more inductive reactance and the arms **114***a* and **114***b* of the driven element operate in a manner similar to a half wave dipole.

Figure 5 shows still another antenna having a director system constructed in accordance with the present invention. In this antenna the boom **210** carries a pair of

spaced low band and high band folded dipoles, 218 and 214, respectively. Transmission line 216 is connected to the dipole 218 and—through a resonant section 216a to the low band dipole 218. The section 216a acts as an open one-half wave line at the high band to decouple the low band dipole 218 in this band, whereas the effect of the dipole 218 is negligible at the low band.

The director 224, constructed like director 24, Figure 1, is located forwardly of the driven elements 214 and 218 and acts primarily to give director action in the low frequency band. The resonant coupler 224a contributes inductance to director 224 at the low frequency band and electrically separates the arms of director 224 in the high frequency band. A second director 229 is located forwardly of the director 224 and is cut to length to act as a director in the high frequency band.

While the present invention is particularly applicable to television antenna applications, it is usable generally where a high frequency antenna must operate in two frequency bands, one about twice the frequency of the other. One such application is that of amateur radio antennas for use in, say, both the 10 meter and 20 meter amateur bands, either for transmitting or receiving.

It will be noted that the directors 24, 26, 29, 30 and 32 are in parallel coplanar relation with respect to the remaining elements of the antenna. In addition, these directors are symmetrical about the boom 10 and—hence are aligned with each other and with the remaining elements.

While I have shown and described a specific embodiment of the present invention it will, of course, be understood that various modifications and alternative constructions may be made without departing from its true spirit and scope. In particular, it is possible to vary individual dimensions from those shown to accent the response of the antenna to particular frequencies or to suppress such response. These adjustments can be made on a cut and try basis to accommodate the antenna to particular conditions or to provide a characteristic deemed superior for general use to that of the antenna as specifically described above. I therefore intend by the appended claims to cover all antennas falling within their true spirit and scope.

What I claim as new and desire to secure by Letters Patent of the United States is:

1. A television antenna to receive signals over a wide frequency band comprising in combination: a pair of coplanar parallel spaced driven units each having a forward dipole and a closely spaced rear unitary element, the dipole being connected to the unitary element by transverse conductors positioned approximately midway along each arm of the dipole; a plurality of dipole directors each having total length approximately one-half wave in length at a frequency near the low frequency end of the band located forwardly and in coplanar parallel relation with the driven units, the dipoles being spaced from each other and from the forward driven unit; antiresonant elements tuned to a frequency near the high frequency end of the band connecting the adjacent ends of the arms of the dipole directors; and unitary directors approximately one-half wave in length at the high frequency end of the band, the last mentioned directors being interposed approximately midway between the adjacent dipole directors and between the forward driven element and the adjacent first dipole director.

2. An antenna for use in receiving signals throughout the frequency range of the low frequency and high frequency television bands comprising in combination: a driven element operable to receive signals in said bands from a predetermined direction; a plurality of coplanar parallel aligned director elements located in said direction from the antenna; each of said elements being approximately one-half wave in length at the high frequency end of the high frequency band; a plurality of pairs of dipole director elements in coplanar parallel aligned relation with said first mentioned director elements, the total length of each of said last directors being approximately one-half wave in the low frequency band, the pairs of dipole director elements being interposed substantially midway between the first mentioned director elements; and resonant couplings connecting the adjacent ends of the dipole director elements, the couplings being resonant at frequencies in the high frequency band and having an inductive reactance in the low frequency band whereby in the high frequency band the pairs of director elements act individually as half wave directors without shielding the first mentioned directors and in the low frequency band the pairs of director elements act in unison as low band directors.

3. An antenna for television use comprising in combination: a driven element adapted to receive signals from a predetermined direction and over a wide range of frequencies; a plurality of parallel coplanar director elements in spaced relation and located in said direction from the driven element, said elements being resonant at a frequency at the high frequency end of the range; a plurality of laterally spaced pairs of like director elements in parallel coplanar relation with and interposed between the first director elements in said direction to define dipoles; and coupling elements connecting the adjacent ends of the directors of said last pairs, the coupling elements being resonant at a frequency in the high frequency end of the range whereby in the high frequency end of the range the pairs of director elements act individually as resonant directors without shielding the first mentioned director elements and at the low frequency end of the range the pairs of directors act in unison as resonant directors.

4. In an antenna for television use to receive signals in both the high frequency and low frequency television band, the improvement comprising: a driven element adapted to receive television signals; a unitary director located in parallel coplanar relation with the driven element, the director being approximately one-half wave in length in the high frequency band; a dipole director located in coplanar parallel aligned relation with the driven element and unitary director, the dipole director having total length substantially a half wave length in the low frequency television band; and a resonant transmission line having a large shunt capacitance connecting the inboard ends of the dipole director and resonant in the high frequency band, whereby in the high frequency band the dipole director acts as a pair of individual resonant directors without shielding the driven element or unitary director and in the low frequency band the dipole director acts as a unitary resonant director.

5. A director system for a two band antenna, the director system comprising in combination: a unitary director of length to operate as a director in the high frequency band; and a dipole director in coplanar parallel aligned relation with the unitary director, the dipole director consisting of colinear dipole arms joined at their inboard ends by a coupling unit resonant in the high frequency band, the length of the dipole director being such as to give director action in the low frequency band in conjunction with the impedance of the coupling unit, whereby in the high frequency band the dipole director acts as a pair of individual resonant directors without shielding effects and in the low frequency band the dipole director acts as a unitary resonant director.

6. A director system for a two band antenna having a longitudinal support boom, the director system comprising in combination: a unitary director of length to operate as a director in the high frequency band, the unitary director being affixed in centered relation on the boom; and a dipole director mounted on the boom in coplanar parallel aligned relation with the unitary director, the dipole director consisting of dipole arms insulatingly supported in colinear relation from the boom; and a coupling unit joining the inboard ends of the dipole arms, the coupling unit comprising a closed parallel wire transmission line conductively attached to the inboard ends of the dipole arms respectively, extending in parallel relation to the boom for part of its length adjacent the dipole arms to embrace the same, and in a plane normal to the boom extending in U-shaped configuration about the boom for the remainder of its length, the coupling unit being resonant in the high frequency band in conjunction with the capacitance of the boom, the length of the dipole director being such as to give director action in the low frequency band in conjunction with the impedance of the coupling unit.

7. An antenna for television use comprising in combination: a conducting support boom; a driven element mounted on the boom in centered relation and adapted to receive signals from one direction lengthwise of the boom and over a wide range of frequencies; a plurality of parallel coplanar director elements mounted on the boom in spaced centered relation in said direction from the driven element, said elements being resonant at a fre-

quency at the high frequency end of the range; a plurality of colinear pairs of director elements carried by the boom in parallel coplanar relation to and interposed between the first director elements in said direction to define dipoles, each director of each of said pairs being insulatingly supported from the boom at its inboard end; and closed parallel wire transmission lines conductively attached to the inboard ends of the dipole arms, respectively, each transmission line extending in parallel relation to the boom for part of its length adjacent the dipole arms to embrace the same and in a plane normal to the boom extending in U-shaped configuration about the boom for the remainder of its length, each transmission line being resonant in the high frequency band in conjunction with the capacitance of the boom, the length of each dipole being such as to give director action in the low frequency band in conjunction with the impedance of the transmission line.

8. A television antenna to receive signals over a wide frequency band comprising in combination: a conducting boom; a pair of coplanar parallel spaced driven units each having a forward dipole and a closely spaced rear unitary element, the dipole being connected to the unitary element by transverse conductors positioned approximately midway along each arm of the dipole, each of said driven units being mounted on the boom; a plurality of dipole directors having a pair of colinear arms insulatingly mounted on the boom, each dipole director having a total length of approximately one-half wave in length at a frequency near the low frequency end of the band and located forwardly and in coplanar parallel relation with the driven units, the dipole units being spaced from each other and from the forward driven unit; closed parallel wire transmission lines connected to the inboard ends of the dipole directors, respectively, each transmission line embracing the boom for a part of its length adjacent the dipole director and in a plane normal to the boom extending in U-shaped configuration about the boom for the remainder of its length and being tuned to a frequency near the high frequency end of the band to cause the dipole director arms to operate individually at the high frequency end of the band and in unison at the low frequency end of the band; and unitary directors approximately one-half wave in length at the high frequency end of band, the last directors being interposed approximately midway between the adjacent dipole directors and between the forward driven element and the adjacent first dipole director.

9. In combination, for use in a TV antenna operable over both the 54–88 megacycle band and the 174–216 megacycle band: a conducting support boom; a driven element mounted on the boom and operable to receive signals from a predetermined direction in both of said bands; a dipole director comprising a pair of colinear arms insulatingly supported from the boom forwardly of the driven element with respect to said predetermined direction, the total length of the director being approximately one-half wave in the 54–88 megacycle band; and, a closed transmission line connected at its ends, respectively, to the dipole arms, said line straddling the boom over the part of its length adjacent the dipole arms and in a plane normal to the boom extending in U-shaped configuration about the boom over the remainder of its length, the transmission line being tuned to resonate in conjunction with the capacity of the boom in the 174–216 megacycle band to cause the dipole arms to operate as individual directors in that band.

References Cited in the file of this patent

UNITED STATES PATENTS

1,745,342	Yagi	Jan. 28, 1930
1,934,182	Franklin	Nov. 7, 1933
2,204,175	Carter	June 11, 1940
2,268,640	Brown	Jan. 6, 1942
2,380,333	Scheldorf	July 10, 1945
2,572,166	Lorusso	Oct. 23, 1951
2,578,973	Hills	Dec. 18, 1951
2,688,083	Hills	Aug. 31, 1954