April 17, 1951 H. A. STRAUS ET AL 2,549,721

ANTENNA SYSTEM OF VARIABLE DIRECTIVITY AND HIGH RESOLUTION

Filed May 16, 1944 3 Sheets-Sheet 1

FIG. 1

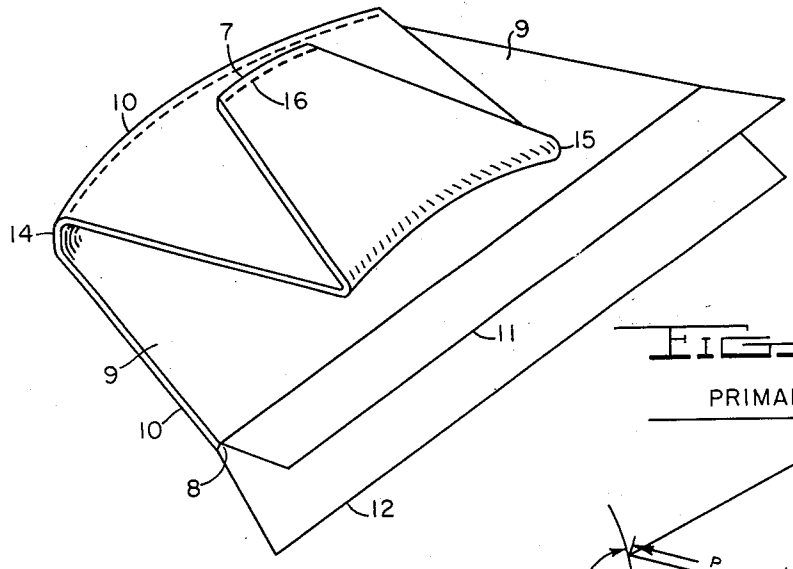

FIG. 1A

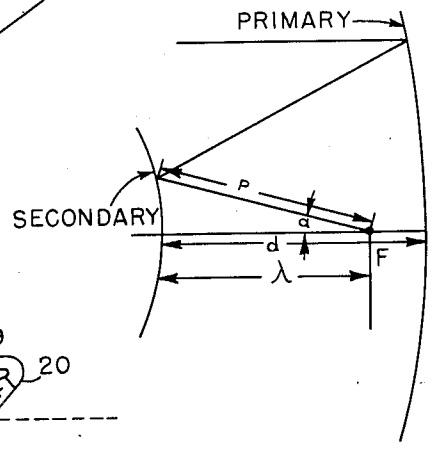

FIG. 2

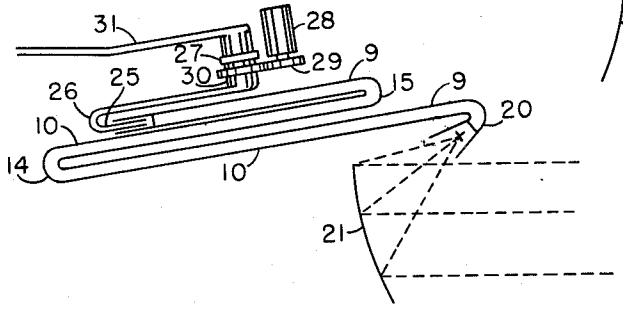

FIG. 3

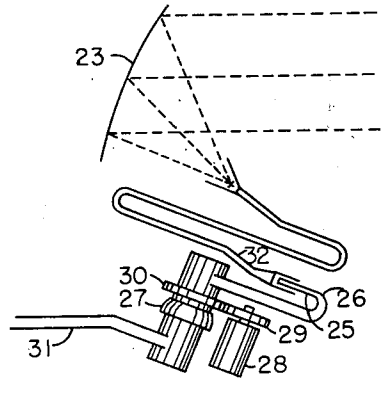

Inventor
L. J. CHU
I. A. GETTING
H. A. STRAUS

By W. Glenn Jones
Attorney

April 17, 1951 H. A. STRAUS ET AL 2,549,721

ANTENNA SYSTEM OF VARIABLE DIRECTIVITY AND HIGH RESOLUTION

Filed May 16, 1944 3 Sheets-Sheet 2

FIG. 4

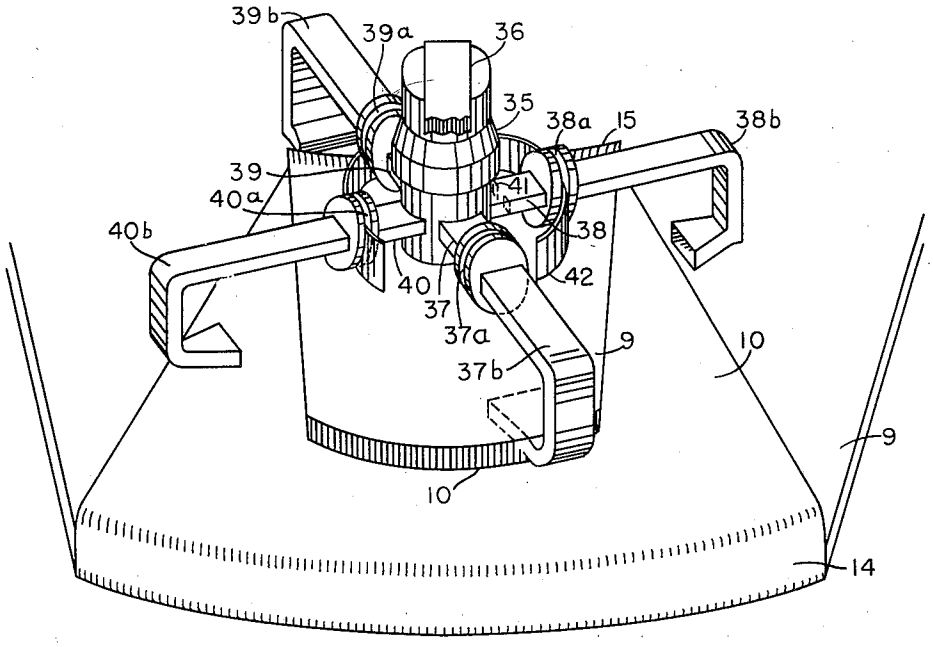

FIG. 7

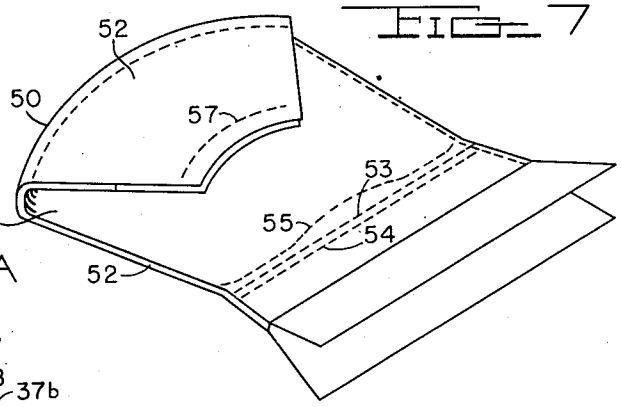

FIG. 4A

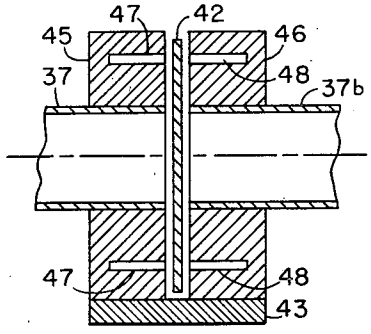

FIG. 7A

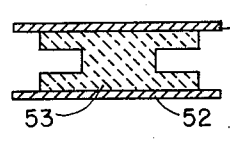

Inventor
L. J. CHU
I. A. GETTING
H. A. STRAUS

By

Attorney

April 17, 1951 H. A. STRAUS ET AL 2,549,721

ANTENNA SYSTEM OF VARIABLE DIRECTIVITY AND HIGH RESOLUTION

Filed May 16, 1944 3 Sheets-Sheet 3

FIG. 5

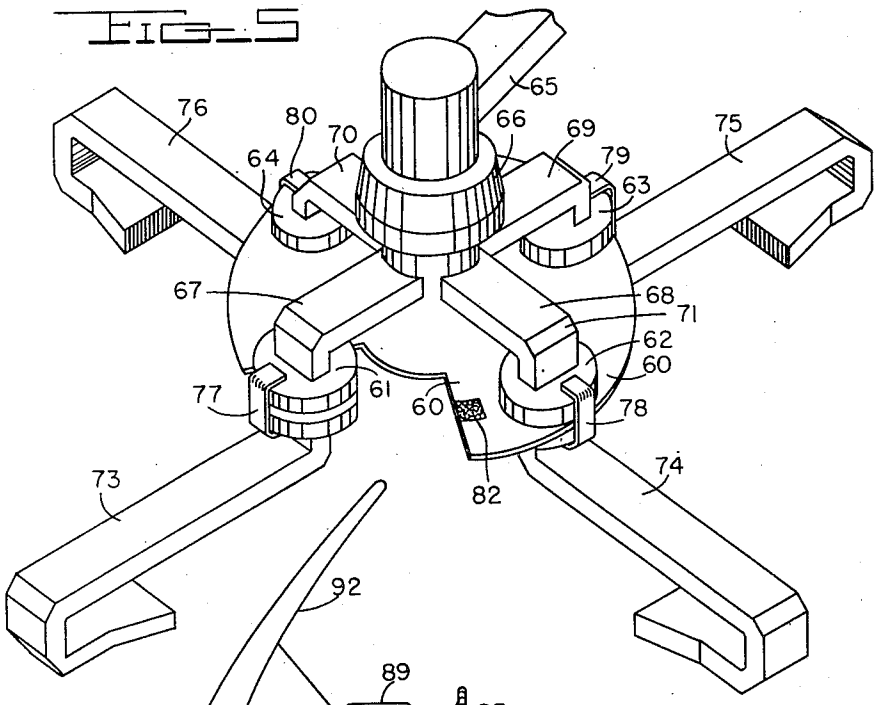

FIG. 6

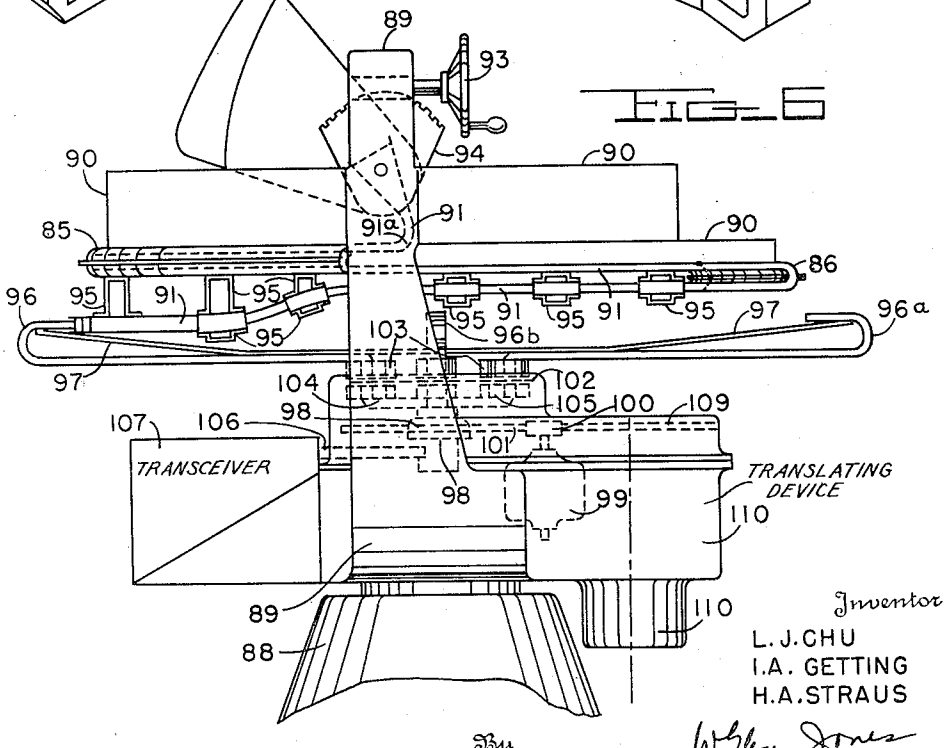

Inventor
L. J. CHU
I. A. GETTING
H. A. STRAUS

By W. Glenn Jones

Attorney

Patented Apr. 17, 1951 2,549,721

UNITED STATES PATENT OFFICE

2,549,721

ANTENNA SYSTEM OF VARIABLE DIRECTIVITY AND HIGH RESOLUTION

Henry A. Straus, Brookline, Ivan A. Getting, Belmont, and Lan Jen Chu, Cambridge, Mass., assignors, by mesne assignments, to the United States of America as represented by the Secretary of the Navy

Application May 16, 1944, Serial No. 535,856

30 Claims. (Cl. 250—33.63)

1

This invention relates to antenna systems for radio waves of very high frequency, or, in other words, to means adapted to radiate sharply directive beams of radio waves and also adapted to intercept radio waves and to concentrate waves coming from a particular direction. The invention is particularly concerned with antenna systems adapted to produce a rapidly moving or scanning sharp beam.

Antenna systems having sharply directional properties for use at the very high frequencies are generally of three types: (1) multiple arrays of dipoles or other antenna elements, (2) quasi-optical systems employing parabolic reflectors or the like and (3) electromagnetic horns. The present invention employs an antenna system which combines many of the advantages of the reflector type systems and of the electromagnetic horn systems, while avoiding some of the difficulties of these systems and providing advantageous new properties. Because the term, "antenna," although used broadly in many intances to cover electromagnetic horns as well as dipole arrays and the like, has a connotation of wire or rod-like structures, the systems of the present invention will be referred to hereinafter as "wave concentrating and directing systems." It is to be understood that the waves here in question are generally electromagnetic.

Wave concentrating and directing systems formed by means of parabolic reflectors are able to provide extremely sharp beams along the axis of the parabolic reflector. In order to vary the direction of such a sharp beam without losing sharpness, it is necessary, at least where deviation of more than a few degrees is desired, to move the parabolic reflector. Displacement of the apparatus used to illuminate the parabolic reflector, or to be illuminated by it away from the focus results in a loss of sharpness, a defect which is known in optical science as "coma." When it is desired to scan a relatively large solid angle with a wave concentrating and directing system at a relatively great rapidity, movement of a bulky apparatus such as a parabolic reflector of high concentrating power is in general impractical. The problem is to some extent simplified by the fact that in the art of radio-echo detection, in which wave concentrating and directing apparatus of the type herein described at present have their chief utility, rapid scanning with a pencil type beam is not desired because of the extremely brief illumination of any particular target in the course of such scanning and instead rapid scanning of a fan beam, which

2

is extremely sharp in one dimension only, is desired. If accurate location is desired in two dimensions, two rapidly scanning fan beams may be employed having their respective narrow dimensions at right angles to each other: If it is desired to locate objects lying in or near a single plane, which might be the surface of the earth or sea, a single rapidly scanning fan beam sharp in azimuth but somewhat broader in elevation may be used.

Fan beams may be produced by linear arrays of dipoles or the like and by parabolic wave-concentrating systems of the "pill-box" type which consists of two substantially parallel plane sheets of metallic material separated by a distance of less than a half wave length and joined by a transverse strip of metal having the shape of a very short length of a parabolic cylinder. With the provision of suitable apparatus at the focus of the parabolic cylinder, such an arrangement is adapted to provide a beam which is very sharp in a plane parallel to that of the parallel metal sheets. Movement of the energizing or receiving apparatus from the focus, however, results in some loss of sharpness, so that the apparatus is rendered unsuitable for rapidly scanning high-resolution systems. The "pill-box" type of radiator just described, may be considered as a combination of the reflector type and electromagnetic horn type of wave concentrating and directing systems.

In the present invention use is made of the optical systems which are characterized by the ability to bring to a sharp focus bundles of rays arriving from a fairly wide range of different angles, and conversely to produce substantially parallel bundles of rays by excitation from a point source of radiation which may be in any position on a surface of substantial extent known as the "field," each bundle of rays having a direction corresponding with the location of the point source in the field. In terms of telescope terminology, such an optical system has a "wide" field. Such optical systems include double-mirror systems such as those for which a general analysis was given by K. Schwarzschild in Part 10 of Astronomische Mittheilungen, beginning at page 12, published by the Göttingen Observatory in 1905 and also systems employing a mirror and a refracting element such as the Schmidt system and various modifications thereof. The principles of the latter type of optical systems are described in the following publications:

Strömgren: Das Schmidtsche Spiegelteleskop

(1935), Vierteljahrschrift der Astronomischen Gesellschaft, 70, 65–86.

Wright: An Aplanatic Reflector with a Flat Field Related to the Schmidt Telescope (1935), Proc. Astron, Soc. Pac. 47, 300.

Double mirror systems are further considered by H. Chrétien in Le Telescope de Newton et le Telescope Aplanetique (1922), Revue d'Optique, 1, 49.

In the adaptation of such optical systems to radio wave apparatus, the first step may be the design of the corresponding "pill-box" structure, thereby producing a fan beam instead of a pencil beam and utilizing electromagnetic horn structures having two parallel walls separated by a distance less than a half-wave length. A great additional improvement may then be introduced to eliminate the serious disadvantage of such systems which results from the blocking off of a portion of the aperture by the end apparatus or, in some cases by the secondary mirror. This improvement is constituted by the construction of the wave concentrating and directing apparatus in the form of a folded horn instead of in the form of a simple "pill-box," a fold of the horn taking place at each mirror element of the optical system. By this improvement the gain of the apparatus, considered as an antenna system, is greatly increased and it has also been found that the magnitude of the side lobes of the directional characteristic of the system are greatly reduced. A very rapidly moving sharp beam can then be produced by moving an energizing source of oscillations along the line which corresponds to the field of the optical system.

The principles of the invention and the construction of certain illustrative embodiments thereof are more fully explained in connection with the annexed drawing, in which:

Fig. 1 is a perspective view of a wave concentrating and directing apparatus of this invention utilizing the equivalent of a double-mirror optical system;

Fig. 1A is a diagram showing the relationship of the elements of the apparatus shown in Fig. 1;

Fig. 2 is a diagrammatic end view of a modified form of wave concentrating and directing apparatus also utilizing a double-mirror type of optical system;

Fig. 3 is a side view, also diagrammatic, of another form of wave concentrating and directing system which is similar to those of Figs. 1 and 2.

Fig. 4 is a perspective view illustrating means for connecting the apparatus of Fig. 1 with a radio transmitting and/or receiving system, such means providing a convenient form for rapid scanning;

Fig. 4A is a cross-section of a portion of the apparatus of Fig. 4;

Fig. 5 is a perspective view illustrating another arrangement of means for connecting the apparatus of Fig. 1 with a radio transmitting and/or receiving system;

Fig. 6 is an elevation view showing one possible form of general organization of apparatus of this invention into a radio-echo location system;

Fig. 7 is a perspective view of a wave concentrating and directing system employing a mirror element and a correcting refracting element in accordance with the principles of the Schmidt optical system, and

Fig. 7A is a cross-sectional view of a possible modification of a portion of the apparatus of Fig. 7.

Fig. 1 shows an illustrative embodiment of the present invention. The wave concentrating and directing apparatus there shown is essentially a flat folded electromagnetic horn. The narrow end of the horn is shown at 7 and the wide end of the horn is shown at 8. If desired, the horn may be simply made of two flat sheets 9 and 10 kept at the proper distance from each other at all points, but the sides of the horn may, if desired, be completed by narrow sheet metal walls joining the top and bottom wide metallic sheets 9 and 10. As in the case of the "pill-box" type of wave concentrating and directing apparatus, the distance between the metallic sheets 9 and 10 is less than a half wave length and is preferably kept constant over the entire structure. In practice, this distance may conveniently be quite short, preferably about 0.2 or 0.3 wave length. End pieces 11 and 12 are provided at the mouth of the horn in order to produce an improved transition between the inside of the horn and free space and in order to provide a slight amount of directivity in the vertical plane (the plane perpendicular to the walls 9 and 10 of the horn). The apparatus shown in Fig. 1 is, however, no ordinary folded horn, for the folds are no ordinary folds calculated to add compactness to the device, but are instead carefully calculated curved surfaces acting as the elements of an optical system. The larger fold, which is shown at 14 constitutes the primary mirror of a double-mirror optical system whereas the fold shown at 15 constitutes the secondary mirror of such optical system.

At each of the folds 14 and 15 the flat electromagnetic horn is folded over 180° or thereabouts so that the surfaces 9 and 10 may remain substantially flat. Slight deviations from the flat shape of these surfaces may be introduced for structural reasons if desired. If the angle of fold is considerably less than 180 degrees, the curvature of the surfaces 9 and 10 in the horizontal plane may have to be considerable in the neighborhood of the fold, and vice versa. The problem of design is simplified if the folds are 180 degrees.

The effect of the curvature in the vertical plane at the folds of the electromagnetic horn is to adjust the length of the rays of electromagnetic energy diverging from any point in the focal line 16 in such a manner that as these rays emerge from the open end 8 of the electromagnetic horn, there will be a progressive uniform change in phase from one side to the other in the horizontal plane of the opening 8, which will result in the production of sharply directive radiation with respect to the horizontal plane. Thus for example if the change of phase is zero, radiation will be along the axis of the device. For purposes of calculation of the curvature in the vertical plane of the folds 14 and 15, radiation travelling along the electromagnetic horn may be regarded as reflected at the fold in the horn, energy coming down one branch of the horn being reflected into another branch at the fold. What actually takes place, however, is more accurately described as a guiding of waves around the corner rather than ordinary reflection but in any event the factor which determines behavior of the apparatus regarded as an optical system is the difference in the length of paths for different rays. The progress of the waves around these curved folds 14 and 15 (as one might consider the behavior of the contours of equal phase) is reasonably approximately as if incident radiation from one branch of the folded horn had been reflected by the "back" wall of the fold into the other branch of

the folded horn. Because of the nature of the phenomenon which takes place, the "back" edges of the fold need not be flat in the vertical dimension, although maintenance of the calculated curvature may sometimes be simplified by forming at least a part of the "back" of the fold in cylindrical shape.

An apparatus of the type of Fig. 1 has a directive characteristic of the type known as a "fan beam," the directivity in the horiontal plane being much sharper than in the vertical plane. The apparatus is able to produce a sharp beam with energization at any point along a focal line 16, the orientation of the maximum of radiation corresponding to the position of the energizing source on the line 16. With this type of system a sharp beam may be made which will retain its sharpness when swung over a total angle of 16 degrees or more as an energizing source is swung along the line 16.

Important considerations in the design of the curvatures for the folds of the horn are (*a*) necessary corrections for spherical aberration and coma (*b*) desirability of short camera length, including possibility of making camera length shorter than focal length, while using wide aperture and (*c*) desirability of a curved field or focal line, preferably with a fairly short radius of curvature and approaching a circular arc in shape, in order that rotary scanning apparatus may be used. Many of the considerations important for astronomical and photographical purposes are of little consequence here: for instance, chromatic aberration, flatness of field and blocking off of aperture by secondary mirror and end apparatus, the last having been obviated by the folded type of construction.

A differential equation was given by Schwarzschild, in the above-cited work, for the general case of two-mirror systems corrected for spherical aberration and coma within certain very small limits and an exact integration of this equation was found which gave the following parametric equations:

(*a*) For the meridian section of the secondary mirror:

$$(1)\qquad \frac{1}{\rho}=\frac{\sin^2\frac{\alpha}{2}}{e+1}+c\left(e+\cos^2\frac{\alpha}{2}\right)^{\frac{1}{e}}\left(\cos^2\frac{\alpha}{2}\right)^{\frac{1+e}{e}}$$

in which ρ is the length of the radius vector from the principal focus to the surface of the mirror and α is the angle between such radius vector and the axis of the system (see Fig. 1A). The constants c and e are given by:

$$(2)\qquad e+1=d \quad \text{and} \quad c=\frac{d\frac{1}{d-1}}{\lambda}$$

where d is the distance between the mirrors and λ is the distance from the principal focus to the second mirror, both expressed in terms of the focal length.

(*b*) For the meridian section of the primary mirror

(3)

$$x'=e+1-\frac{\sin^2\alpha}{4(e+1)}-\frac{1}{c(e+1)}\left(e+\cos^2\frac{\alpha}{2}\right)^{2+\frac{1}{e}}\left(\cos^2\frac{\alpha}{2}\right)^{-\frac{1}{e}}$$

$$y'=\sin\alpha$$

where x' and y' are rectangular coordinates referred to the focus as origin and the axis of the system as the axis of abscissae (x' axis).

These equations were shown to be capable of expansion into a power series with the transformation of coordinates

$$\begin{cases}x=\rho\cos\alpha\\ y=\rho\sin\alpha\end{cases}\qquad\text{and}\qquad\begin{cases}x'=x\\ y'=\sin\alpha\end{cases}$$

to give:

(4)

$$x=-\lambda-\left(\frac{1-\lambda}{d}-1\right)\frac{y^2}{4}+\left\{\frac{1}{4d}-\frac{1-\lambda}{2d}+2\left(\frac{1-\lambda}{2d}\right)^2\right\}\frac{y^4}{8\lambda^3}+\cdots$$

$$x'=d-\lambda-\frac{1-\lambda}{4d}y'^2+\frac{\lambda}{32d}y'^4+\cdots$$

On the basis of this investigation Schwarzschild recommended for astronomical purposes a system of two concave mirrors of certain particular sizes and characteristics and computed the characteristics of such system. His proposed system, however, does not meet the requirements of the "important considerations" (*b*) and (*c*) given above. It is therefore necessary to go back to the general case and to work out a new system in order to obtain the best results for the folded horn apparatus, as has been done by Dr. James G. Baker of the Harvard College Observatory for the express purpose of the construction of a device in accordance with this invention. It was found that a wide aperture apparatus with a short camera (horn) length shorter than the focal length could be obtained with a concave primary mirror and a convex secondary mirror (compare the article by Chrétien, above cited). It was also found that the field thus obtained was conveniently curved.

Although a more exact solution might theoretically be found by working directly from Schwarzschild's parametric equations, the shape of the mirrors may be more simply obtained to a sufficiently high accuracy by successive trials employing the Equations 4 and finding terms in y^6 and y'^6 respectively which provide the desired freedom from spherical aberration and coma over a desired aperture for a few typical points on the mirror. A few trials will soon lead to a curve which satisfies the desired conditions within very small limits. The curvature of the focal surface at the principal focus can then be computed and various circular arcs tried until one is found which provides the best definition over the desired field.

It is found convenient, in order to obtain a compact device, to provide the principal focus in a position above the vertex of the primary mirror, thus making $d=\lambda$. A convenient focal length (chosen to keep down the horn length while keeping a wide aperture) is $3d$, so that $d=\lambda=\frac{1}{3}$. Referring each curve to axes intersecting at the vertex, with the y axis being the axis of the system, and using the direction of curvature as the $+x$ direction in both cases, the following equations for the mirror sections were obtained:

Primary: $x_1=0.5y^2-0.03125y^4-0.020y^6$

Secondary: $x_2=0.75y^2-5.96025y^4+40.53y^6$

It will be seen that the mirrors are relatively flatter in the center than spherical (circular) mirrors. This system may be built with a focal length of 20.86 feet and with a 20 foot clear aperture in a single direction. The "f number" will

then be 1.04 and the mirror separation will be 6.953 feet. The radius of the focal surface will be about 4.8 feet and the depth of the secondary mirror will be 0.459. The aperture of the primary mirror may be increased to 22.6 feet to assure full illumination of the secondary mirror from various angles. A field of 10° is possible with such a system.

The length of the path around the folds should be considered for calculations of high accuracy. When an apparatus of about 6 foot aperture was designed in accordance with the above principles without correction for this factor and then built, however, the only important effect from this neglect was that the principal focus was four inches inside the vertex of the primary mirror instead of in vertical alignment with such vertex and the radius of curvature of the arc of best definition at the focus was considerably different from that calculated. The necessary modifications were readily made in the location and form of the feeding apparatus. The sharpness of focus over the field, after the focal arc of best definition was located, did not appear to be adversely affected. The beam width at half-power was 1.1° on the axis 1.3° at a deviation of 4° and about 1.5° at a deviation of 8°. Even greater sharpness is obtainable with greater apertures.

The horn need not be continued outwards much beyond the primary (large) mirror fold. It is desirable to continue it some distance to damp out undesired modes of oscillation that may be excited near the mirror fold, and to prevent additional modes that may be excited between the flared pieces 11 and 12 from effectively reaching the neighborhood of the mirror fold. Several wave lengths are sufficient for this purpose. It is convenient to continue the horn far enough to prevent interference from the outer part of the portion of the horn including the secondary mirror, however.

The horn may be constructed of sheet metal backed by suitable external ribs or other stiffening members. It may also be made of suitably supported metal gauze or netting provided that the interstices of the network are small in linear dimensions compared with the wavelength. If desired the horn may be made of a non-conductor such as plywood covered by a metallic coating sprayed on by known processes to give a coating of reasonable electrical continuity, at least for radio frequencies. If desired, the mouth of the horn may be closed off by a thin wall of a "plastic" having good transmission properties for the waves desired to be passed therethrough. A quarter-wave thickness may be advantageous. In other words, the principles of physical construction applied to the construction of wave guides are applicable to the construction of electromagnetic horns, including electromagnetic horns of this invention.

Fig. 2 shows an apparatus of the general type of the apparatus shown in Fig. 1 including a modification for obtaining increased directivity in the vertical plane. The apparatus is shown in a side view. The wide end of the electromagnetic horn is folded over additionally as shown at 20, this fold being somewhat less than 180 degrees so that the radiation is directed as shown by the dashed line on Fig. 2. The radiation proceeding from the open end of the electromagnetic horn may be regarded as diverging from some point (or line) vertical to the plane of the figure indicated by the letter X in Fig. 2. The location of this point or line may be determined by suitable experiments. A mirror 21 having the shape of a portion of a cylindrical parabola having its focal axis perpendicular to the plane of Fig. 2 and substantially coinciding with the line represented by the point X is then provided and so oriented that radiation proceeding from the electromagnetic horn will be concentrated, with respect to the vertical plane, in a desired direction. Such an arrangement will reduce the disparity between the directivity of the system in the vertical plane and the directivity in the horizontal plane, but the radiated beam will still be essentially a "fan beam," having a width in the vertical plane considerably greater, say 3, 5, 10 or 15 times as great as the width in the horizontal plane, according to the design of the parabolic reflector 21 and the electromagnetic horn heretofore described.

Concentration in the vertical plane might be provided, instead of by a cylindrically parabolic mirror such as the mirror 21, by opening the electromagnetic horn before the fold 14 and substituting for the fold 14 a mirror which is parabolic in the vertical plane and in the horizontal plane has the same curvature as the fold 14 would have. Such an arrangement would eliminate one fold of the horn but would complicate the construction of the mirror. The mirror, like the mirror 21 would have to be obliquely illuminated in the vertical plane in order that the electromagnetic horn would not block off access to free space in directions in which it is desired to radiate energy.

In Fig. 3 is shown an arrangement for producing results such as those effected by a system of the type shown in Fig. 2, the system of Fig. 3 employing an apparatus of Fig. 1 without modification and, particularly without the addition of an extra fold 20 (Fig. 2) at the wide end of the electromagnetic horn. The elimination of one fold reduces the tendency of standing waves to form in the horn. In Fig. 3 the electromagnetic horn is tilted and is so oriented that the wider portion is on top. If desired, only the mouth portion may be tilted. A cylindrically parabolic mirror 23 is then illuminated in such a manner that a beam may be radiated which is more concentrated in the vertical plane than that which the apparatus of Fig. 1 is able to produce, the mirror 23 being so oriented in the vertical plane that the reflected beam passes substantially clear of the electromagnetic horn, as shown in the figure by the dashed line. Again the concentration in directivity in the vertical plane is less than the extreme sharpness of directivity achieved by the curved-fold system of the electromagnetic horn.

In Figs. 2 and 3 there is indicated diagrammatically means for energizing the electromagnetic horn, which means may if desired be also adapted for being energized by radiation intercepted by the electromagnetic horn. Although such means could be provided in the form of a dipole or the like, a wave guide type of energizing means is preferred. Such wave guide means is indicated generally at 25 and may be simply an ordinary rectangular or cylindrical wave guide adapted to be excited in the $TE_{0,1}$ mode and dimensioned accordingly or it may be a wave guide of the type provided with a terminal flare in the horizontal plane. Iris diaphragms or the like may be provided in the wave guide 25 for purposes of impedance matching, if desired, in accordance with well-known practice. Since the focal line 16 will generally be curved with the

center of curvature towards the front of the electromagnetic horn (towards the position of the mirror 15) rather than towards the back, the lateral motion of the wave guide 25 is most conveniently provided about a pivot located forwardly of the focal line 16 with respect to the orientation of the electromagnetic horn (to the right on Fig. 2 and to the left on Fig. 3). The wave guide 25 is accordingly bent over as shown at 26. The wave guide 25 then connects with a rotatable joint 27, such, for example as that disclosed in the application in Fig. 15 of the patent application of W. W. Salisbury Serial Number 489,844, now Patent No. 2,451,876, issued October 19, 1948. Suitable rotation or pendulum motion of the wave guide 25 may then be provided by the motor 28 acting through the gears 29 and 30. The wave guide 31, which is coupled to the fixed portion of the rotatable joint 27, may then be connected to a transmitting and/or receiving system such as a system for detecting and locating objects by the echo method by means of short pulses of radio wave energy. If desired, the horn may be bent in the vertical plane, as at 32 on Fig. 3, in order to accommodate the structure of the rotatable joint 27 without increasing the mechanical turning moment of the wave guide arm 25.

Mechanical supports and the like have been omitted in the representations of Figs. 2 and 3 and, likewise in Figs. 4 and 5, in order to simplify these illustrations. It is to be understood that such supports may be provided in a variety of places and that because of the nature of the electromagnetic horn these supports may be either of metallic or of nonconducting material.

In Fig. 4 a more elaborately developed arrangement for connecting an apparatus of the type shown in Fig. 1 to a radio transmitter and/or receiving system is illustrated. Mechanical supports and driving motors and the like have been omitted from this drawing again in order to simplify the illustration. The purpose of the arrangement of Fig. 4 is to take advantage of the scanning capabilities of a wave concentrating and directing apparatus such as Fig. 1 and thereby to provide a relatively rapid swinging of the directive characteristics of the apparatus in the horizontal plane. It is desired that this swinging should be at a relatively uniform speed in order that all portions of the field may be covered with substantial uniformity so that the apparatus may work at the fastest rate of scan compatible with the proper operation of a pulse type of radio-echo detection and location system, and also to provide repeated scanning without excessive intervals between scanning sweeps. It is desirable to operate radio-echo location apparatus of the repeated pulse type in such a manner that a continuous series of pulses is produced, such as pulses of a duration of one microsecond repeated about 500 or 1000 times per second. The desirability of having uniform coverage of the field and the desirability of utilizing all of the pulses combine into the advisability of employing a spider type of feed having a number of arms which in succession swing by the focal-line portion of the wave concentrating and directing apparatus. These various arms may then rotate at a uniform speed and they may be arranged so that one enters the field just after another has left it.

In Fig. 4 the wave concentrating and directing apparatus shown is of the type shown in Fig. 1 having broad metallic wave guiding surfaces 3 and 10 and having folds 14 and 15 which are curved in the horizontal plane. Energy is fed to a rotating joint 35, which may be in the same general type as that shown at 27 in Fig. 2, through a rectangular type wave guide 36, which is shown broken off in Fig. 4. The portion of the rotating joint structure 35 which is connected to the wave guide 36 is fixed, whereas the lower portion is adapted to be rotated by suitable mechanical means (not shown). This lower portion of the rotating joint 35 is provided with a number of rectangular branch wave guides, in this case four, communicating with the rotating joint in a manner adapted for energy transfer, these branch wave guides being shown at 37, 38, 39 and 40. Iris diaphragms, such as the iris diaphragm indicated by the dotted line 41 may be provided to improve energy transfer between the rotating joints 35 and the branch wave guides, in accordance with present practice as disclosed in the aforesaid application of W. W. Salisbury. The branch wave guides 37, 38, 39 and 40 are interrupted by grooved flange type joints shown at 37*a*, 38*a*, 39*a* and 40*a*, which leave a narrow transverse air gap between the said branch wave guides and extensions of the said branch wave guides shown at 37*b*, 38*b*, 39*b* and 40*b*. The construction of these grooved-flange gap-providing joints is shown in Fig. 4A. Their purpose is to permit switching from one branch wave guide to another by the interposition of an interrupted cylindrical metallic sheet 42 which is adapted to come between the branch wave guides and their respective extensions as the branch wave guides are rotated, so that each branch wave guide will be effectively connected with the wave guide 36 only while the latter is engaged in the opening of the wave concentrating and directing device. The mechanical means necessary to maintain the extensions 37*a*, 38*a*, 39*a* and 40*a* respectively in line with the wave guides 37, 38, 39 and 40 are not shown on Fig. 4 in order to simplify the illustration. It is to be understood that if the cylindrical metallic sheet 42 is supported from below, these mechanical arrangements for maintaining wave guide alignment will be arranged on the upper sides of the wave guides and will pass over the upper portion of the grooved-flange joints shown in Fig. 4A, and likewise if the cylindrical sheet 42 is supported from above, together with the fixed portion of the rotating joint 35, these mechanical arrangements for maintaining wave guide alignment will be provided below, as is illustrated by element 43 on Fig. 4A. It will be understood in accordance with well-known principles that these mechanical arrangements may be made of conducting or nonconducting materials.

The type of joint shown in Fig. 4A is constructed in accordance with the invention of W. W. Salisbury described in his aforesaid patent application, as improved by our colleague S. Roberts who introduced the use of circular grooves in joints of rectangular wave guides. As shown in Fig. 4A, flanges 45 and 46 are provided respectively upon the wave guides 37 and 37*b*. These flanges are circular in contour, in a plane perpendicular to the axis of the wave guide, and each is provided with a circular groove, shown in cross section on Fig. 4A respectively at 47 and 48. These grooves have a depth of approximately a quarter-wave length and the radius of the grooves in the plane perpendicular to the wave guide axis is such that near the center of the broader walls of the wave guides 37 and 37*b* (the

top and bottom wall in 4A), the groove is located at a distance from the interior of the wave guide of approximately a quarter-wave length. The grooves will thus pass quite close to the wave guide near the narrow sides of the wave guides, but this will have little effect on the behavior of the arrangement because the electric field of the wave guide approaches zero towards the narrow sides of the wave guide.

The cylindrical metal sheet 42 is adapted to fit between the flanges 47 and 46, as shown in Fig. 4A. When it is so located, the wave guides 37 and 37*b* are effectively closed off by the metal sheet 42, because, as explained in the above-mentioned patent application of W. W. Salisbury, the groove acts to present an effective short circuit between the walls of the wave guides 37 and 37*b* and the metal sheet 42 for radio frequencies across the portion of the wave guide where the electric field is of substantial magnitude. The radius of the cylindrical sheet 42 should be great enough so that the curvature does not interfere with the effect just described. If desired, the front face of the flange 45 and the bottom of the groove 47 may be curved to correspond with the curvature of the sheet 42. It will be seen that the groove 48 is not necessary, since it merely assists the groove 47 when the sheet 42 is not interposed between the two flanges and when the sheet 42 is so interposed the situation reigning in the wave guide 37*b* is wholly immaterial. The groove 48 may therefore, if desired, be omitted. It is to be understood that the switch mechanism constituted by the flanges 45 and 46, their grooves, and the sheet 42 should be situated at such a distance from the rotating joint 35 that those wave guides which are effectively closed off by the sheet 42 exercise a minimum interference with transmission along the other wave guide which is not so interrupted, which is to say that the wave guides which are closed off have the proper electrical length to excite minimum reflection of energy back towards the transmitter. The establishment of the proper electrical length for this purpose is well understood in the art. In general it may be said that the distance from the inside cylindrical wall of the rotating joint 35 to the reflecting metal sheet 42 should be an integral number of electrical half wave lengths. In order that standing waves in the system associated with the transmitter may be avoided, the cylindrical sheet 42 should be so designed that one and only one of the branch wave guides is completely opened at any one time. If this cannot practically be accomplished without providing power to one or another of the wave guide extensions 37*b*, 38*b*, 39*b* and 40*b* when these wave guides have not yet entered engagement with the wave concentrating and directing apparatus or have just left such engagement, the surface 42 may be so arranged that the wave guide extensions are energized only when they are engaged in the wave concentrating and directing apparatus, but standing waves may be expected in the transmitter systems between the periods between the times when the different wave guide extensions are so engaged. If desired, the interrupted portion of the cylindrical metal wall 42 may be narrowed down so that it is considerably less than that necessary for communication of power to one of the wave guide extensions at all times, but a portion of the metal wall 42 facing the wave guides 37, 38, 39 and 40 such that it together with the interruption in the metal wall 42 add up to $1/n$ of the circumference, n being the number of branch wave guides, may be coated with a film of absorbing material, such as certain types of aggregates of finely divided high permeability ferromagnetic metal, held in a dielectric binder. The absorbing material would act to minimize reflections in the transmitter system arising in that one of the branch wave guides facing such absorbing material. In this manner fairly good control of the standing waves in the transmitter system may be achieved without allowing stray energy to be radiated from any of the open ends of the wave guiding extensions 37*b*, 38*b*, 39*b* or 40*b* when the latter are not engaged with the walls 9 and 10 of the wave concentrating and directing apparatus.

Although it has been stated that the purpose of the arrangement of Fig. 4 is to provide for rapid scan, the term "rapid" is used in a relative sense, meaning a scanning effect which is rapid in comparison with the type of scanning possible by moving an entire antenna system or the like. There are certain limitations upon the speed of scanning in radio-echo detecting and locating systems which results from the fact that it is desirable to conduct the scan so that any object in the field will be illuminated by several pulses, say 5 or 6, each time it is swept by the beam. It is desirable to work near this limiting speed of scan for certain practical purposes, so that the uniform scanning speed such as is provided in the apparatus of Fig. 4 by uniform rotation of the joint 35, is advantageous. The scanning speeds that may be used in any given system will depend to some extent upon the recurrence rate of the pulses transmitted by the transmitter of the system and also to some extent by the beam width of the directional characteristic of the wave concentrating and directing device as measured in the plane in which scanning is effective. This follows from the fact that the upper limit on the speed of scan depends upon the requirement of illuminating each possible target with a given number of pulses (more or less arbitrarily determined by experiment) in the course of each sweep. With a pulse repetition rate of about 1000 per second, it is believed to be good practice to rotate the wave guide spider comprising the wave guides 37, 38, 39 and 40 at about 60 revolutions per minute. In order to improve tracking capabilities it may be advantageous to work with a pulse repetition rate of about 3000 or 4000 per second and a correspondingly increased rate of rotation of the spider, say about 200 R. P. M.

It will be understood that the driving motor (not shown) which actuates the rotating joint and the wave guide spider will also drive some type of a transmitting mechanism such as a potentiometer or a variable transformer for providing to the indicating means of the receiver of the system the necessary control signals for correlating information received from echoes of transmitted pulses with the position of the wave guide spider at the time when the pulses in question were sent out and received. It will be understood that the drive between such motor and such translating device may be geared up by a factor equal to the number of branch wave guides on the wave guide spider, on account of the fact that there is one complete scan produced by each arm of the spider in the course of each revolution, it being understood that the arms of the spider should be equally spaced when such gearing is provided in order that the scanning cycles corresponding to the various arms will be accurately spaced in time.

Fig. 5 shows a form of apparatus for feeding an electromagnetic horn of the present invention, the apparatus being designed in accordance with the general principles of the apparatus shown in Fig. 4 but having the further improvement, suggested by our colleague J. R. Zacharias, that the switching between the rotating branch wave guide is accomplished by a flat disk 60 instead of by the curved sheet 42 of Fig. 4. Thus the grooved-flange structures 61, 62, 63, 64 may have flat faces and may be kept at a substantially uniform and relatively small clearance from the disk 60, thus improving their performance.

The electromagnetic horn has been omitted from the illustration in order to simplify the figure. The fixed wave guide leading to the transmitting and/or receiving system is shown at 65. The rotating joint appears at 66 and the inner portions of the branch wave guide are shown at 67, 68, 69 and 70. These branch wave guides are sharply bent downward at right angles, the outer portion of the wave guide corner being provided with short 45° portions as shown in the drawing, at 71 for instance. The grooved-flange structures 61, 62, 63 and 64 are provided on the downwardly bent portions of the branch wave guides 67, 68, 69 and 70 respectively. Extension wave guides 73, 74, 75 and 76, provided with suitable flanged terminations at their inner end are mounted by means of straps 77, 78, 79 and 80 so as to extend the inner portions 67, 68, 69 and 70 of the branch wave guides beyond the disk 60. The outer portions or extensions 73, 74, 75 and 76 of the branch wave guides are bent at right angles near their inner ends in order to extend them radially outward. They are again bent, this time completely doubled upon themselves at their outer extremities in order to provide for insertion into the throat of an electromagnetic horn after the manner shown in Fig. 4.

The disk 60 has a sector cut out of it to allow communication of power into one of the branch wave guides while such branch wave guide is inserted in the throat of the electromagnetic horn. Absorbing material, as shown at 82, is provided on suitable portions on the upper surface of the disk 60 in the neighborhood of the cut out sector in order that one of the branch wave guides will draw power from the rotating joint at all times although the passages of each of the branch wave guides through the portion of the throat of the horn where it is desired to transmit and receive energy occupies less than one-quarter of the revolution of the branch wave guide system.

Fig. 6 is a side elevation illustrating in a general way a practical form of construction of an apparatus using a wave concentrating and directing device in accordance with the present invention. In order that the general configuration of the device may be visualized, it should be pointed out that the wave concentrating and directing device is a great deal wider than it is deep, which is to say that although the depth measured from the extremity of the curved fold 85 to that of the curved fold 86 may measure about 4 feet, the width of the device (perpendicular to the plane of Fig. 6) would in the usual case be about three times as much, or 12 feet. Great width is an advantage, since it makes possible the production of extremely sharp beams.

The apparatus is supported from a base 88 upon which is rotatably mounted a yoke 89. The yoke 89 carries a frame 90 on the under side of which is mounted the wave concentrating and directing apparatus. The latter is a flat folded horn, as indicated at 91, the flat horn 91 being subjected to folds 86 and 85 along horizontally curved lines in accordance with the principles hereinbefore described. The mouth end of the electromagnetic horn wave concentrating and direction apparatus is bent upward as shown at 91*a* in order to direct the radiation towards a cylindrically parabolic reflector 92 which is adapted to concentrate the radiation with respect to vertical distribution. The reflector 92 is independently mounted upon the yoke 89 and its position is controlled by the hand wheel 93 acting on the sector 94. Various stiffening members (not shown) are provided within the frame 90 in order to lend rigidity to the wave concentrating and directing device. Other stiffening members 95 serve to hold the lower portion of the wave concentrating and directing device in place and also to provide lateral stiffening.

The wave concentrating and directing device is fed by a rotating wave guide spider three arms of which are shown at 96, 96*a* and 96*b*. This spider apparatus is formed essentially in accordance with construction shown in Fig. 5, the device being inverted with respect to the position of the device shown in Fig. 5. The arms 96, 96*a* and 96*b* of the spider shown in Fig. 6 are proportionally longer than those shown for purposes of illustration in Fig. 5 and accordingly braces 97 are provided, which may be of steel or of Duralumin, in order to maintain mechanical stiffness and alignment. The rotating wave guide joint is shown at 98 having branch wave guides 104, 105, etc. and being driven by the motor 99 through the gears 100 and 101. The annular disk 102, which has a suitable sector cut out, serves the purpose of the disk 60 of Fig. 5 acting to provide switching between the rotating joint 98 and the arms of the spider. The disk is made annular in shape in order to allow connecting members 103 to provide the mechanical connection between the arms 96, 96*a* and 96*b* and the rotating joint 98.

Energy may be fed to or from the rotating wave guide joint 98 through a wave guide 106 which connects with a transmitting and receiving apparatus 107. The motor 99 which drives the rotating joint 98 and the feed spider, also drives, through the gear 109, a translating device occupying the space shown generally at 110, which translating device is adapted to provide suitable electrical indication of the position of the wave guide spider in order that the transmitting and receiving apparatus 107 may correlate the information obtained from received signals with the information relating to the orientation of the feed spider.

In order to coordinate the indication of echoes obtained with each of the four feed arms of the spider, for the purpose of presenting an accurate picture on a cathode ray tube, it may be desirable to associate a photoelectric device (not shown) to determine the exact time when each arm passes a predetermined point near the mouth 91 of the directing horn. If desired several calibrating devices of this sort, photoelectric or otherwise, may be associated with the several spider arms. Thus individual deviations of the spider arms from the prescribed exact relative angular positions will be prevented from interfering with the accuracy of the indication. The timing of the azimuth sweeps of a cathode ray indicator may thus be controlled, synchronized, or checked, by an accurate measurement of the position of the feed arms.

The apparatus shown in Fig. 6 is particularly useful for accurately locating vessels or low flying aircraft on or near the surface of the sea from a coastal observation point. The entire apparatus may be rotated upon the base 88 to change the field of observation and such rotation should of course be correlated with the indicating circuits of the apparatus 107, rotation of this type being usually made fairly slowly in view of the bulk of the apparatus. Rapid scanning within the field of the apparatus, which field may be about 15 degrees, is accomplished by rotation of the feed spider, which may conveniently be performed at the rate of 240 revolutions per minute when the apparatus 107 is transmitting pulses at a repetition rate of about 4000 per second.

Fig. 7 illustrates a wave concentrating and directing system in accordance with this invention employing the analogue of a lens-and-mirror optical system following the principles of the Schmidt optical system. The apparatus is again a wide flat folded horn having a fold along a line curved in the horizontal plane, the horizontal plane being the plane in which the folded horn has its wide dimensions. In this case only one such curved fold is provided, appearing in the figure at 50; the upper and lower walls of the electromagnetic horn appear at 51 and 52 respectively. Instead of a second curved fold there is provided a lens or correcting plate, shown in dotted line 53 formed of a dielectric material. The material may be high quality Bakelite. It should be a material producing relatively small losses, but a low dielectric constant is not particularly desired since the index of refraction varies as the square root of the dielectric constant. In accordance with the principles of the Schmidt optical system, the curve of the fold 50 as viewed in the horizontal plane is a circular arc. The correcting plate 53 may have one side plane as shown at 54, and the other side in the form of a reverse curve indicated generally by the shape of the dotted line 55. It is known that a number of different curves may be used, according to the desired location of the focus or focal line (the focal line in this case being shown at 57).

The choice of the shape of the correcting plate 53 is connected with the choice of the ratio of focal length to linear aperture. A relatively long focal length for a given aperture and a given mirror curvature may be obtained with the focal line 57 relatively close horizontally to the position of the correcting plate 53. The focal line 57 is an arc of a circle concentric with the arc on which the fold 50 (the mirror of the system) is formed. If the focal line is close to the center of curvature, its radius of curvature will be relatively short, which is convenient for a rotating feed system. On the other hand, the length of the focal line for a given angular field will then be short, and deviations of the feeding device from the characteristics of a point source of radiation may adversely affect the sharpness of the beam, more than they would if the field were less concentrated. The most serious disadvantage of placing the focal line too far from the mirror 50 is probably that the shape of the correcting plate 53 required in such cases involves relatively long axial dimensions near the edges of the horn. If the thickness of the correcting plate is substantially more than about a quarter-wave length it becomes important to eliminate internal reflections at the surfaces of the correcting plate. Even when measures are taken in regard, they are not always completely successful, so that correcting plate shapes including wide variations of the thickness of the correcting plates are relatively undesirable. In practice, therefore, it is preferred to locate the focal line 57 about midway between the correcting plate 53 and the vertex of the fold 50.

Measures for preventing internal reflections at the surfaces of the correcting plate are illustrated in Fig. 7A. As here shown, dielectric correcting plate may be provided with a cross-sectional shape such as that shown in Fig. 7A, having grooves along each exposed face which are adapted to provide an impedance match between the empty portions of the electromagnetic horn and the portions filled with dielectric. This is the electromagnetic wave guide analogy to a "coated lens." A more direct analogy, which would involve quarter-wave thickness strips of another dielectric having a dielectric constant equal to the geometric means between that of the central dielectric portion and that of air provided on each side of the correcting plate 53, could also be used to prevent internal reflections by the correcting plate. In general the problems of avoiding internal reflections is not peculiar to systems including dielectric barriers such as the correcting plate 53 and it may be expected to exist even in connection with folds in the electromagnetic horn such as the folds 14, 15 and 50. In the case of folds it is propably wisest to choose by experimental methods the vertical profile for the fold which results in the greatest reduction of internal reflections and the best transmission of energy around the corner. The provision of folds in the relatively simple manner shown in the drawings will produce energy transfer with sufficient freedom from undesired reflections for very good results, but it is to be expected that further refinement employing known techniques may result in improved reduction of reflections at the fold. The rounded type of fold shown in the drawings produces less reflections than a sharp or rectangular fold just as a rounded bend in the wave-guide pipe produces less reflection than a square corner.

In accordance with the usual structural features of Schmidt optical systems, the circular fold 50 which corresponds to a circular mirror has a width or chord greater than the width of the correcting plate 53, so that the horn is narrowed towards the correcting plate 53. The terminal flare of the horn may begin not far from the correcting plate 53, separated only by a length of narrow horn long enough to prevent interfering modes of oscillation that may be excited in the flaring part of the horn from reacting with the correcting plate. Detailed information relating to the horizontal profile of the correcting plate can be obtained from the above-cited publication of Strömgren.

In apparatus using an insular fold of relatively great radius of curvature the correcting plate may be omitted in some cases since the spherical aberration of the system may then no longer be large compared to the contributions of other factors, such as the type of feed, to the beam width.

If the device shown in Fig. 7 is energized for purposes of relatively rapid scanning by a wave guide turret or spider of the type shown in Figs. 4 and 5, such spider may have straight arms instead of bent over arms, since the center of rotation will be forward of the line 57 (above some point near the middle of the correcting plate 53)

and the arms may simply extend directly from the center of rotation into engagement with the walls 51 and 52 at the throat of the horn.

It will be noted that what is known in optics as the speed of the system, which arises from the relation of the focal length to the linear dimension of the aperture, is very great. It is also to be noted that the characteristics of the wave concentrating and directing apparatus of this invention are substantially independent of the operating frequency within a very wide range.

This type of equipment is also amenable to sturdy construction as required in practical installations.

The apparatus here described may be constructed out of such easily shaped materials as sheet copper or brass in the case of folds, and Bakelite or other "plastics" in the case of dielectric barriers ("lenses" or "correcting plates"). The wave lengths are sufficiently large so that the extreme accuracy in absolute dimensions which is required of telescope lenses is not necessary for the shaping of the elements of the systems herein described although a considerable degree of accuracy is desired.

Various type of curvatures may be employed for folds and for dielectric barrier surfaces and the utility of this invention is not limited to particular optical systems here described.

What is claimed is:

1. Apparatus for concentrating and directing electromagnetic waves including a substantially flat electromagnetic horn, two broad walls substantially parallel to each other over the greater part of their extent, said horn having a narrow transverse dimension perpendicular to said broad walls of less than a half-wave length at the operating frequency, said horn being at least once folded over on itself on a line which is curved in a plane parallel to the said broad walls of said horn.

2. Apparatus in accordance with claim 1 having diverging plane extensions of said broad walls at the orifice of the said electromagnetic horn.

3. Apparatus for concentrating and directing electromagnetic waves including a substantially flat electromagnetic horn having two broad walls substantially parallel to each other over the greater part of their extent, said horn having a transverse narrow dimension of less than a half-wave length at the operating frequency, said horn being twice folded over on itself respectively on lines which are curved symmetrically about the axis of said horn in planes approximately parallel to the said broad walls, the said lines being curved and spaced from each other in a manner adapted to provide an approximately aplanatic wave concentrating characteristic and to bring to a sharp focus parallel rays entering said horn from a substantial range of angles of incidence in a plane parallel to said broad walls.

4. Apparatus for concentrating and directing electromagnetic waves including a substantially flat electromagnetic horn having two broad walls substantially parallel to each other over the greater part of their extent, said horn having a transverse narrow dimension of less than a half-wave length at the operating frequency, said horn being folded over on itself on a line which is curved symmetrically with respect to the axis of said horn and in a plane approximately parallel to said broad walls, said horn having also a transverse dielectric barrier one of the surfaces of which transverse to said horn is curved in the plane of said broad walls and symmetrically with respect to the axis of said horn, said dielectric barrier and said curved line being shaped and disposed in a manner adapted to bring to a sharp focus parallel rays entering said horn from a substantial range of angles of incidence in a plane parallel to said broad walls.

5. Apparatus in accordance with claim 4 in which said curved line is substantially a circular arc and said dielectric barrier is curved in a manner adapted to correct for the spherical aberration of the cylindrical reflector effectively constituted by the folding as aforesaid of said electromagnetic horn.

6. In a folded horn type wave concentrating and directing means of the class described, a means for energizing the same, comprising a main wave guide, a rotatable joint connected thereto and having an axis of rotation substantially perpendicular to the longitudinal axis of said horn type wave concentrating and directing means, at a first end thereof, a number of branch wave guide sections extending radially from said rotatable joint, each of said branch guides having a corresponding wave guide extension coupled thereto by means of a flange type joint so arranged as to provided an air gap between said branch guide and its extension, each of said branch guides and its respective extension arranged to swing in succession by the throat of said horn type wave concentrating and directing means, a cylindrical sheet member coaxially arranged with said rotatable joint, and adapted to communicate with said air gaps, having an interruption therein which is so oriented with respect to said first end of said horn type wave concentrating and directing means as to inhibit the transfer of energy between said rotatable joint and all of said branch wave guides except the one instantaneously communicating with said first end of said horn type wave concentrating and directing means.

7. In a folded type wave concentrating and directing means of the class described, a means for energizing the same comprising a main wave guide, a rotatable joint connected thereto and having an axis of rotation perpendicular to the longitudinal axis of said folded type wave concentrating and directing means at a first end thereof, a number of branch wave guide sections extending radially from said rotatable joint, each of said branch guides having a corresponding wave guide extension coupled thereto by means of a flange type joint so arranged as to provide an air gap between said branch guide and its extension, each of said branch guides and its respective extension arranged to swing in succession by said first end of said folded type wave concentrating and directing means, a sheet member concentrically arranged with said rotating joint and adapted to communicate with said air gaps, said sheet being formed with a gap in the circumference thereof so oriented with respect to said first end of said folded type wave concentrating and directing means as to inhibit the transfer of energy between said rotatable joint and all of said branch guides except the one which is instantaneously in communication with said first end of said folded type wave concentrating and directing means, said sheet being further provided with an energy absorbent coating on a portion of the surface of said sheet communicating with said air gaps.

8. In a folded type wave concentrating and

directing means of the class described, a means for energizing the same comprising a main wave guide, a rotatable joint connected thereto and having an axis of rotation substantially perpendicular to the longitudinal axis of said folded type wave concentrating and directing means at a first end thereof, a number of branch wave guide sections extending radially from said rotatable joint, each of said branch guides having a corresponding wave guide extension coupled thereto by means of a flange type joint so arranged as to provide an air gap between said branch guide and its extension, each of said branch guides and its respective extension arranged to swing in succession by said first end of said folded type wave concentrating and directing means, a sheet member concentrically arranged with said rotating joint and adapted to communicate with said air gaps, said sheet being formed with a gap in the circumference thereof so oriented with respect to said first end of said folded type wave concentrating and directing means as to inhibit the transfer of energy between said rotatable joint and all of said branch guides except the one which is instantaneously in communication with said first end of said folded type wave concentrating and directing means.

9. An antenna comprising two spaced plates, said plates being formed with at least one direction change along a fold line transverse to the longitudinal axis of said plates, said fold line having a substantial departure from a straight line.

10. An antenna comprising two spaced plates, said plates being disposed in a substantially parallel relationship throughout the major portion of their length, said plates being formed with at least one direction change along a fold line transverse to the longitudinal axis of said plates, said fold line having a substantial departure from a straight line.

11. An antenna comprising two spaced plates, said plates being disposed in a substantially parallel relationship throughout the major portion of their length, said plates being formed with at least one direction change along a curved fold line, said fold line being transverse to the longitudinal axis of said plates.

12. Apparatus for interchanging electromagnetic energy between a source and a receiver comprising, a wave energy guide system, said guide system being formed with at least one direction change along a fold line transverse to the longitudinal axis of said guide system, said fold line having a substantial departure from a straight line.

13. Apparatus for interchanging electromagnetic energy between a source and a receiver comprising a wave energy guide system, said guide system being formed with at least one direction change along a curved fold line, said fold line being transverse to the longitudinal axis of said guide system.

14. Apparatus for interchanging electromagnetic energy between a source and a receiver comprising a wave energy guide system, said guide system being formed with at least one direction change along a curved fold line, said fold line being transverse to the longitudinal axis of said guide system and symmetrical about said longitudinal axis.

15. An antenna comprising two spaced conductive plates disposed in a substantially parallel relationship throughout the major portion of their length, said plates being formed with at least one direction change along a fold line transverse to the longitudinal axis of said plates, said fold line having a substantial departure from a straight line.

16. An antenna comprising two spaced conductive plates disposed in a substantially parallel relationship throughout the major portion of their length, said plates being formed with at least one direction change along a curved fold line, said fold line being transverse to the longitudinal axis of said plates.

17. Apparatus for concentrating and directing electromagnetic waves comprising, two spaced conductive plates, said plates being disposed in a substantially parallel relationship throughout the major portions of their length, said plates being spaced by a distance not greater than a half wave length of said electromagnetic waves at the operating frequency, said plates being formed with at least one direction change along a fold line transverse to the longitudinal axis of said plates, said fold line having a substantial departure from a straight line.

18. Apparatus for concentrating and directing electromagnetic waves comprising two spaced conductive plates, said plates being disposed in a substantially parallel relationship throughout the major portion of their length, said plates being separated by a distance not greater than a half wave length of said electromagnetic waves at the operating frequency, said plates being formed with at least one direction change along a curved fold line, said fold line being transverse to the longitudinal axis of said plates.

19. Apparatus for concentrating and directing electromagnetic waves comprising two spaced conductive plates, said plates being disposed in a substantially parallel relationship throughout the major portion of their length, said plates being separated by a distance not greater than a half wave length of said electromagnetic waves at the operating frequency, said plates being formed with at least one direction change along a curved fold line, said fold line being transverse to the longitudinal axis of said plates and symmetrical about said longitudinal axis.

20. Apparatus for concentrating and directing electromagnetic waves comprising an electromagnetic horn having one transverse dimension not greater than a half wave length and the other transverse dimension much greater than a half a wave length at the operating frequency, said horn having at least one abrupt fold along a fold line transverse to the longitudinal axis of said horn, said fold line having a substantial departure from a straight line.

21. Apparatus for concentrating and directing electromagnetic waves comprising an electromagnetic horn having one transverse dimension not greater than a half wave length and a second transverse dimension much greater than half a wave length at the operating frequency, said horn having at least one abrupt fold along a curved fold line transverse to the longitudinal axis of said horn and means cooperating with said fold providing an approximately aplanatic wave concentrating and directing characteristic.

22. Apparatus in accordance with claim 21, wherein said means cooperating with said fold comprises a second fold of the type specified in said claim.

23. Apparatus in accordance with claim 21

wherein said means cooperating with said fold includes a dielectric barrier across said electromagnetic horn, said barrier having at least one curved surface.

24. Apparatus for concentrating and directing electromagnetic waves comprising an electromagnetic horn having one transverse dimension not greater than a half wave length and a second transverse dimension much greater than half a wave length at the operating frequency of said horn, said horn having at least one abrupt fold along a curved fold line transverse to the longitudinal axis of said horn, means cooperating with said fold providing an approximately aplanatic wave concentrating and directing characteristic and feed means adapted to be moved along the focal line of said horn.

25. Apparatus in accordance with claim 24 wherein said means cooperating with said fold comprises a second fold of the type specified in said claim.

26. Apparatus in accordance with claim 24 wherein said means cooperating with said fold includes a dielectric barrier across said electromagnetic horn, said barrier having at least one curved surface.

27. Apparatus for concentrating and directing electromagnetic waves comprising an electromagnetic horn having one transverse dimension not greater than half a wave length and a second transverse dimension much greater than half a wave length at the operating frequency of said horn, said horn having at least one abrupt fold along a curved fold line transverse to the longitudinal axis of said horn, means cooperating with said fold providing an aplanatic wave concentrating and directing characteristic, said horn having a focal line in the form of a circular arc, and feed means rotatable about the center of curvature of said arc and along said focal line.

28. Apparatus for concentrating and directing electromagnetic waves comprising an electromagnetic horn having one transverse dimension not greater than a half wave length and a second transverse dimension much greater than half a wave length at the operating frequency of said horn, said horn having at least one abrupt fold along a curved fold line transverse to the longitudinal axis of said horn, means cooperating with said fold providing a substantially aplanatic wave concentrating and directing characteristic and feed means adapted to move in spaced relationship to said fold.

29. Apparatus for concentrating and directing electromagnetic waves comprising two spaced conductive plates separated by a distance less than a half wave length at the operating frequency, said plates being formed with at least one abrupt change in direction along a curved line transverse to the longitudinal axis of said plates and substantially parallel to the median surface between said two plates.

30. In an electromagnetic energy radiating system including a horn type wave concentrating and directing means adapted to be energized at a first end by a moving feed, means for energizing said horn type wave concentrating and directing means comprising a main wave guide, a rotatable joint connected thereto and having an axis of rotation substantially perpendicular to the longitudinal axis of said horn type wave concentrating and directing means at said first end thereof, a number of branch wave guide sections extending radially from said rotatable joint, each of said branch guides having a corresponding wave guide extension coupled thereto by means of a flange type joint so arranged as to provide an air gap between said branch wave guide and its extension, each of said branch guides and its respective extension being arranged to swing in succession by said first end of said horn type wave concentrating and directing means, a sheet member concentrically arranged with said rotating joint and adapted to communicate with said air gaps, said sheet being formed with a gap in the circumference thereof so oriented with respect to said first end of said horn type wave concentrating and directing means as to inhibit the transfer of energy between said rotatable joint and all of said branch guides except the one which is instantaneously in communication with said first end of said horn type wave concentrating and directing means.

HENRY A. STRAUS.
IVAN A. GETTING.
LAN JEN CHU.

REFERENCES CITED

The following references are of record in the file of this patent:

UNITED STATES PATENTS

Number	Name	Date
2,300,052	Lindenblad	Oct. 27, 1942
2,398,095	Katzin	Apr. 9, 1946
2,405,242	Southworth	Aug. 6, 1946
2,415,352	Iams	Feb. 4, 1947
2,427,005	King	Sept. 9, 1947
2,429,601	Biskeborn et al.	Oct. 18, 1947
2,436,408	Tawney	Feb. 24, 1948
2,441,574	Jaynes	May 18, 1948

FOREIGN PATENTS

Number	Country	Date
116,110	Australia	Nov. 19, 1942