June 11, 1929. E. THOMSON 1,717,281

INSULATOR

Filed March 2, 1927

Fig. 1.

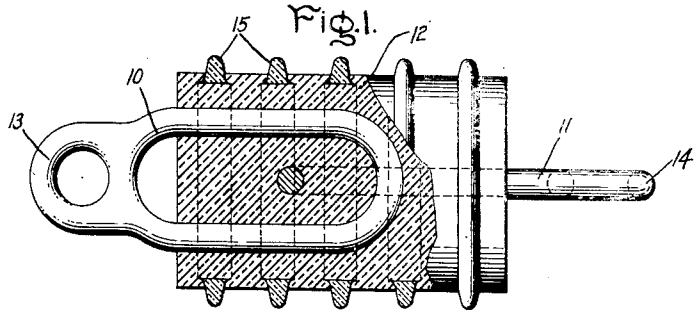

Fig. 2.

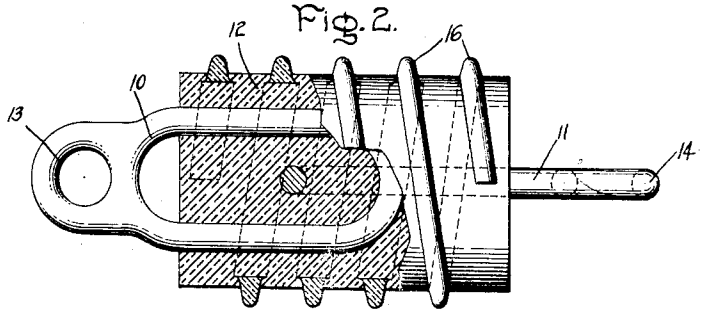

Fig. 3.

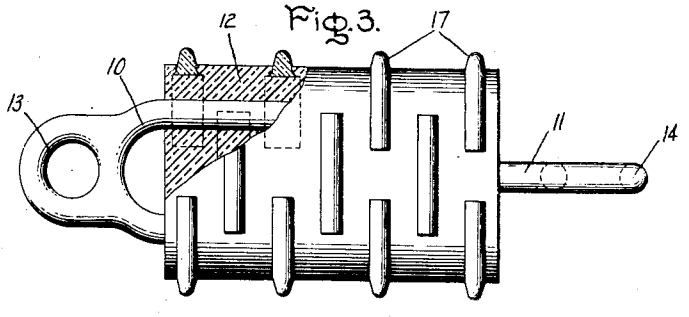

Fig. 4.

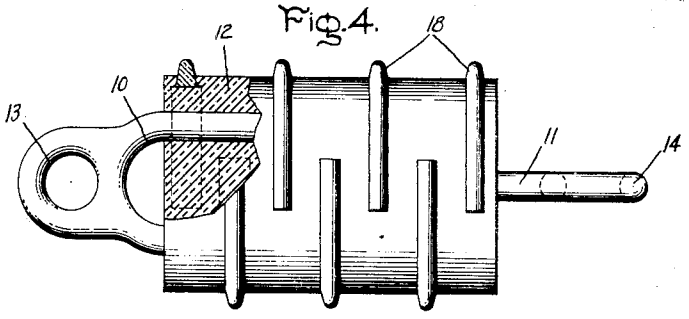

Inventor:
Elihu Thomson,

by Alexander S. Lane
His Attorney.

Patented June 11, 1929. 1,717,281

UNITED STATES PATENT OFFICE.

ELIHU THOMSON, OF SWAMPSCOTT, MASSACHUSETTS, ASSIGNOR TO GENERAL ELECTRIC COMPANY, A CORPORATION OF NEW YORK.

INSULATOR.

Application filed March 2, 1927. Serial No. 172,117.

My invention relates to insulators and has for its object a simple and rugged insulator in which provision is made for preventing failure of the insulator due to electrical discharges over its surface.

My invention has particular application to insulators which have a potential gradient over their outer surfaces whereby they are subject to electrical discharges over their outer surfaces, such as strain insulators for electric lines, spark plugs, etc. Insulators of this type very often receive gradual accumulations of dust and other substances which have a much higher electrical conductivity than the insulator itself. These deposits eventually result in an electrical discharge over the surface of the insulator. Glass, porcelain and various other insulating materials ordinarily used are often splintered or carbonized somewhat when subjected to such electrical discharges, whereby the efficiency of the insulator is greatly impaired.

In carrying out my invention I insert strips of quartz material in the insulator, which strips project from the insulator and extend in a direction transverse to the potential gradient over the surface of the insulator. These strips of quartz are not damaged by flash-overs and consequently the accumulations of dust or other material are burned off without appreciable detrimental effect on the insulator.

For a more complete understanding of my invention reference should be had to the accompanying drawing, the four figures of which are side views partly in section showing various forms of electric insulators constructed in accordance with my invention.

Referring to the drawing I have shown my invention as applied to strain insulators, such as used on electric power lines. This insulator comprises two metallic members 10 and 11 which are somewhat similar to the links of a chain and are interlinked with each other in a similar manner. The links, however, are embedded in spaced relation in a suitable insulating material 12 which may be molded into the desired form, shown as substantially cylindrical. The links are thereby electrically insulated from each other by the insulating material 12 which may be any suitable material, such as glass, porcelain, bakelite, etc. The projecting ends of the links are provided with eyelets 13 and 14 to facilitate the attachment of wires thereto, one or both of which may be connected to a high tension electrical supply source.

The potential difference, which may be very great, between the two link members 10 and 11 results in a potential gradient between the two members over the surface of the insulating material in which they are embedded. It will be readily understood that deposits of dust and other foreign material which may accumulate on the insulator may in time form a path of sufficient conductivity over the surface of the insulator to produce an electrical discharge over the surface. This discharge burns away the accumulated material, but with the usual insulating materials, such as glass, porcelain, etc., the material of the insulator itself may be decomposed or carbonized somewhat or injured so as to impair the efficiency of the insulator.

In accordance with my invention I provide barriers on the surface of the insulator extending transversely to the potential gradient made of an electrically insulating material which is not injured by the electrical discharges. I have found that quartz is a very suitable material for this purpose. In the form shown in Fig. 1 a plurality of rings 15 made of quartz are embedded in the insulating material 12 so as to project therefrom an appreciable distance. In the form shown in Fig. 2 a helically formed quartz strip 16 is embedded in the insulating material. Fig. 3 shows a plurality of relatively short quartz strips 17 which are embedded in the insulating material in staggered relation. In Fig. 4 the quartz strips 18 are somewhat greater than semicircles and are placed in staggered relation on the insulator. As shown in the drawing the rings 15 and strips 16, 17 and 18 are wider at the inner edges and thus are securely held imbedded in the insulating material 12. With this arrangement the required insulation properties are maintained by the quartz barriers, which are not injured by electrical discharge, even though the insulating material 12 may become a partial conductor on its surface.

While I have described my invention as embodied in concrete form and as operating in a specific manner in accordance with the provision of the patent statutes, it should be understood that I do not limit my invention thereto since various modifications thereof will suggest themselves to those skilled in the art without departing from the spirit

of my invention the scope of which is set forth in the annexed claims.

What I claim as new and desire to secure by Letters Patent of the United States is:

1. In an insulator having a potential gradient across its surface, a body of molded insulating material, a plurality of projecting strips of quartz imbedded in said material forming barriers for electrical discharge over the surface thereof.

2. An insulator comprising a body of insulating material, and a projecting member made of quartz imbedded in said body and extending transversely to the potential gradient on the surface of the insulator.

3. An insulator comprising a body of molded insulating material, and strips of quartz embedded in said material and projecting from said body, said strips extending in a direction transverse to the potential gradient across the surface of said insulator.

In witness whereof, I have hereto set my hand this twenty eighth day of February, 1927.

ELIHU THOMSON.