(19) Europäisches Patentamt
European Patent Office
Office européen des brevets

(11) EP 2 522 897 A2

(12) EUROPEAN PATENT APPLICATION

(43) Date of publication:
14.11.2012 Bulletin 2012/46

(51) Int Cl.:
F21S 8/10 *(2006.01)*

(21) Application number: **12166944.4**

(22) Date of filing: **07.05.2012**

(84) Designated Contracting States:
AL AT BE BG CH CY CZ DE DK EE ES FI FR GB GR HR HU IE IS IT LI LT LU LV MC MK MT NL NO PL PT RO RS SE SI SK SM TR
Designated Extension States:
BA ME

(30) Priority: **10.05.2011 JP 2011105163**

(71) Applicant: **Koito Manufacturing Co., Ltd.**
Tokyo 108-8711 (JP)

(72) Inventor: **Komatsu, Motohiro**
Shizuoka-shi (JP)

(74) Representative: **HOFFMANN EITLE**
Patent- und Rechtsanwälte
Arabellastrasse 4
81925 München (DE)

(54) Vehicle headlamp

(57) A vehicle headlamp (1) is provided with a light source body (13) and an optical component (26). The light source body (13) includes a planar light source (15) and a reflector (16). The optical component (26) has a focal point and is adapted to reflect or project the light from the planar light source (15). A relative position between the light source body (13) and the optical component (26) is variable so that the focal point of the optical component (26) moves between a first location on the reflector (16) and a second location on the planar light source (15).

FIG. 1

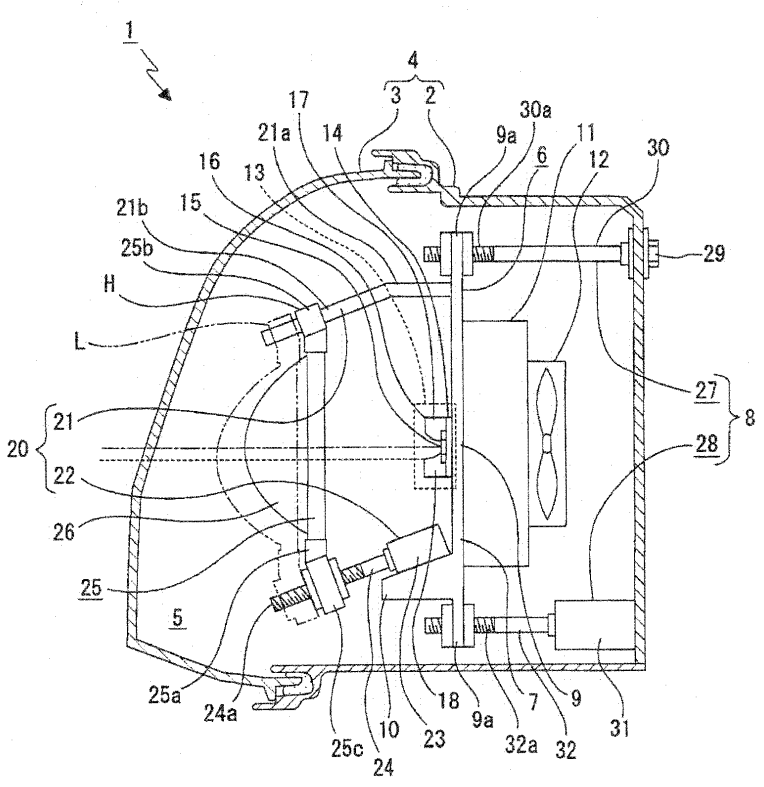

EP 2 522 897 A2

Description

BACKGROUND OF THE INVENTION

<FIELD OF THE INVENTION>

[0001] The present invention relates to a vehicle headlamp. More particularly, the invention relates to a vehicle headlamp in which a relative position of a light source body and an optical component for reflecting or projecting the light from the light source body is varied, thereby reducing a size and cutting down a manufacturing cost, and furthermore, enabling switching of a light distribution pattern.

<RELATED ART>

[0002] There is a vehicle headlamp in which a lamp unit having a projection lens and a light source such as a light emitting diode is disposed in an outer casing of a lighting device which is formed by a cover and a lamp body (for example, see JP-A-2010-153333).

[0003] In the vehicle headlamp described in JP-A-2010-153333, a shade for shielding a part of a light from the light source is disposed apart from the light source in a forward direction in order to form a predetermined light distribution pattern. A tilt angle or a position of the shade is variable by a shade driving mechanism. Depending on the tilt angle or the position of the shade, the light distribution pattern is switchable between a long-distance light distribution pattern for a high beam (a main beam) to illuminate a light on a long distance and a short-distance light distribution pattern for a low beam (a low beam) to irradiate a light on a short distance.

[0004] However, the vehicle headlamp described in JP-A-2010-153333 has a following problem. That is, since the shade is disposed apart from the light source in the forward direction, a length in a direction of an optical axis (a longitudinal direction) is correspondingly increased so that a reduction in a size is hindered.

[0005] Moreover, the vehicle headlamp of JP-A-2010-153333 requires the shade and a shade driving mechanism for driving the shade. Therefore, a space for disposing them is required. So, there is also a problem in that the reduction in the size is still hindered and a manufacturing cost rises.

SUMMARY OF THE INVENTION

[0006] One or more embodiments of the invention provide a vehicle headlamp which reduces a size and cuts down a manufacturing cost, and furthermore, enables switching of a light distribution pattern.

BRIEF DESCRIPTION OF THE DRAWINGS

[0007]

Fig. 1 is a schematic longitudinal sectional view showing a vehicle headlamp according to a first embodiment.

Fig. 2 is an enlarged perspective view showing a light source body of the first embodiment.

Fig. 3 is a view showing a state in which a low beam is irradiated in the vehicle headlamp of the first embodiment.

Fig. 4 is a view showing a light distribution pattern of the low beam.

Fig. 5 is a view showing a state in which a high beam is irradiated in the vehicle headlamp of the first embodiment.

Fig. 6 is a view showing a light distribution pattern of the high beam.

Fig. 7 is an enlarged sectional view showing an optical path in the case in which one of reflecting surfaces is formed as a hyperbolic surface and the other is formed as a parabolic surface.

Fig. 8 is an enlarged sectional view showing an optical path in the case in which both of the reflecting surfaces are formed as the parabolic surfaces.

Fig. 9 is an enlarged perspective view showing a light source body according to a modification.

Fig. 10 is a schematic longitudinal sectional view showing a vehicle headlamp according to a second embodiment.

Fig. 11 is a view showing a state in which a low beam is irradiated in the vehicle headlamp of the second embodiment.

Fig. 12 is a view showing a light distribution pattern of the low beam.

Fig. 13 is a view showing a state in which a high beam is irradiated in the vehicle headlamp of the second embodiment.

Fig. 14 is a view showing a light distribution pattern of the high beam.

DETAILED DESCRIPTION OF THE EMBODIMENTS

[0008] Embodiments and modifications are described with reference to accompanying drawings. The embodiments and modifications described herein are not intended to limit the invention but only as examples of the invention, and all features or combinations of the features of the embodiments and the modifications are not always essential to the invention.

[0009] A vehicle headlamp 1 according to a first embodiment will be described (see Figs. 1 to 9).

[0010] The vehicle headlamp 1 is to be disposed on an associated side of left and right sides of a front end of a vehicle body.

[0011] As shown in Fig. 1, the vehicle headlamp 1 has a structure in which an inner part of an outer casing 4 constituted by a lamp body 2 opened forward and a cover 3 attached to a front end of the lamp body 2 is formed as a lamp housing 5, and a lamp unit 6 is disposed in the lamp housing 5, for example.

[0012] A holding member 7 is provided in the lamp housing 5 tiltably in horizontal and vertical directions through an optical axis adjusting mechanism 8.

[0013] The holding member 7 is formed by a metallic material having a high thermal conductivity, and has a base portion 9 which directs in a longitudinal direction and an attached protrusion 10 which is protruded forward from a lower end of the base portion 9. An upper surface of the attached protrusion 10 is tilted to be gradually displaced downward in a forward direction.

[0014] Supported portions 9a, 9a and 9a are provided on both of upper and lower ends of the base portion 9 (only two supported portions 9a and 9a are shown in Fig. 1). Radiation fins 11, 11, ··· protruded rearward are provided on a rear surface of the base portion 9 apart from each other on left and right.

[0015] A radiating fan 12 is attached to rear surfaces of the radiation fins 11, 11, ··· provided on the base portion 9.

[0016] A light source body 13 is attached to a central part on a front surface of the base portion 9.

[0017] The light source body 13 has a circuit board 14, a plurality of light emitting diodes 15, 15, ··· which is mounted on the circuit board 14 and functions as a planar light source for emitting a light, and a reflector 16 for reflecting lights emitted from the light emitting diodes 15, 15, ···.

[0018] The light emitting diodes 15, 15, ··· are arranged in a predetermined direction, for example, a transverse direction and light emitting surfaces direct forward (see Fig. 2).

[0019] The reflector 16 is formed by a first reflecting portion 17 and a second reflecting portion 18 which are positioned vertically apart from each other, and the first reflecting portion 17 is disposed on an upper side of the light emitting diodes 15, 15, ··· and the second reflecting portion 18 is disposed on a lower side of the light emitting diodes 15, 15, ···. A surface positioned on the lower side of the first reflecting portion 17 and a surface positioned on the upper side of the second reflecting portion 18 are formed as reflecting surfaces 17a and 18a, respectively. For example, referring to the reflecting surfaces 17a and 18a, the reflecting surface 17a is formed as a hyperbolic surface and the reflecting surface 18a is formed as a parabolic surface.

[0020] A shielding wall 19 for shielding a part of the lights emitted from the light emitting diodes 15, 15, ··· is provided in one of left and right parts based on a part of a front end in an upper end of the second reflecting portion 18, that is, a central part in a transverse direction of the reflecting surface 18a.

[0021] The shielding wall 19 is formed in a plate shape directing in a longitudinal direction, and an upper edge 19a is formed to be extended in a transverse direction (a horizontal direction) and a side edge 19b positioned in linkage to a central part in the transverse direction of the reflecting surface 18a is tilted to the reflecting surface 18a.

[0022] An irradiating direction changing mechanism 20 is attached to the base portion 9 of the holding member 7 (see Fig. 1). The irradiating direction changing mechanism 20 has a support protrusion 21 and driving means 22.

[0023] The support protrusion 21 is formed axially and is protruded forward from an upper part of the base portion 9. The support protrusion 21 is constituted by a base end 21 a coupled to the base portion 9 and extended in a longitudinal direction, and a support shaft portion 21b linked to a front end of the base end 21a and extended obliquely downward.

[0024] The driving means 22 is attached to the attached protrusion 10. The driving means 22 is constituted by a driving portion 23 and a shaft portion 24 protruded obliquely downward from the driving portion 23, and the shaft portion 24 is provided with a screwing shaft portion 24a. The shaft portion 24 is positioned in a parallel state with a support shaft portion 21 b of the support protrusion 21.

[0025] A lens holder 25 is movably supported on the irradiating direction changing mechanism 20. The lens holder 25 has an annular lens holding portion 25a, a first supported portion 25b provided on an upper end of the lens holding portion 25a, and a second supported portion 25c provided on a lower end of the lens holding portion 25a.

[0026] The lens holder 25 is movably supported on the irradiating direction changing mechanism 20 by inserting the support shaft portion 21 b into the first supported portion 25b in a slidable state and screwing the second supported portion 25c into the screwing shaft portion 24a of the driving means 22.

[0027] A projection lens 26 functioning as an optical component is held on the lens holding portion 25a of the lens holder 25.

[0028] When the shaft portion 24 is rotated by a driving force of the driving portion 23, the second supported portion 25c is fed in a corresponding direction to a rotating direction thereof and the first supported portion 25b is guided by the support shaft portion 21 b so that the lens holder 25 and the projection lens 26 are moved integrally. The projection lens 26 is moved between a first position L to be a forward moving end and a second position H to be a rear moving end which is provided in a rear and upward part of the first position L. At this time, depending on a position of the lens holder 25, a rear focal point of the projection lens 26 moved between a first location on the second reflecting portion 18 and a second location on the light emitting surfaces of the light emitting diodes 15, 15, ···.

[0029] In the vehicle headlamp 1, the lamp unit 6 is constituted by the holding member 7, the radiation fins 11, 11, ···, the radiating fan 12, the light source body 13, the irradiating direction changing mechanism 20, the lens holder 25 and the projection lens 26.

[0030] The optical axis adjusting mechanism 8 has aiming screws 27 and 27 (only one of the aiming screws

27 is shown in Fig. 1) and an actuator 28.

[0031] The aiming screws 27 and 27 are positioned on left and right apart from each other in the upper part of the lamp housing 5, and are constituted by rotation operating portions 29 and 29 and shaft portions 30 and 30 which are protruded forward from the rotation operating portions 29 and 29 respectively, and front ends of the shaft portions 30 and 30 are provided as screwing shaft portions 30a and 30a respectively.

[0032] In the aiming screws 27 and 27, the rotation operating portions 29 and 29 are rotatably supported on the rear end of the lamp body 2 respectively, and the screwing shaft portions 30a and 30a are screwed into the supported portions 9a and 9a at the upper side of the holding member 7 respectively.

[0033] The actuator 28 is constituted by a driving portion 31 and a shaft portion 32 protruded forward from the driving portion 31, and a screwing shaft portion 32a is provided in the shaft portion 32. In the actuator 28, the screwing shaft portion 32a is screwed into the supported portion 9a at the lower side of the holding member 7.

[0034] In the vehicle headlamp 1, when the rotation operating portion 29 is operated by means of a jig such as a driver which is not shown so that the aiming screw 27 coupled to the supported portion 9a is rotated, the holding member 7 is tilted by setting the other supported portions 9a and 9a as fulcrums in a corresponding direction to a rotating direction thereof so that the optical axis of the lamp unit 6 is adjusted (an aiming adjustment).

[0035] When the shaft portion 32 coupled to the supported portion 9a is rotated by the driving force of the driving portion 31, moreover, the holding member 7 is tilted in a vertical direction by setting the other supported portions 9a and 9a as the fulcrums in a corresponding direction to a rotating direction thereof so that the optical axis of the lamp unit 6 is adjusted (a leveling adjustment).

[0036] In the vehicle headlamp 1 which has the structure described above, when a driving voltage is applied to the light source body 13 by a driving operation of a lighting circuit which is not shown, lights are emitted from the light emitting diodes 15, 15 ···. The lights emitted from the light emitting diodes 15, 15, ··· direct forward or are reflected by the reflecting surfaces 17a and 18a so that the lights are collected onto a focal plane including the rear focal point of the projection lens 26, and are transmitted through the projection lens 26 and the cover 3 and are thus irradiated forward.

[0037] In the vehicle headlamp 1, when a low beam is irradiated, the projection lens 26 is moved into the first position L so that the rear focal point of the projection lens 26 positions on the first location on the front end of the second reflecting portion 18.

[0038] Fig. 3 is a view showing a state in which the low beam is irradiated in the vehicle headlamp 1. In Fig. 3, referring to a light A directing toward the central part of the projection lens 26, a light B reflected by the front end of the reflecting surface 17a and directing toward the projection lens 26, and a light C reflected by the front end of the reflecting surface 18a and directing toward the projection lens 26 in the lights emitted from the light emitting surfaces of the light emitting diodes 15, 15, ···, respective optical paths are shown in arrows. Moreover, Fig. 4 is a view showing a light distribution pattern P1 in the irradiation of the low beam.

[0039] When the rear focal point of the projection lens 26 positioned on the first location on the front end of the second reflecting portion 18, a part of the lights emitted from the light emitting diodes 15, 15, ··· and reflected by the reflecting surface 18a is shielded by the shielding wall 19 so that a cut line CL in the light distribution pattern P1 of the low beam is formed by a front edge of the reflecting surface 18a, the upper edge 19a and the side edge 19b (see Fig. 4). The light A is projected onto a slightly lower side of a horizontal line HL by means of the projection lens 26, the light B is projected onto a part below the light A, and the light C is projected onto the cut line CL.

[0040] In the light source body 13, the shielding wall 19 for shielding a part of the lights emitted from the light emitting didoes 15, 15, ··· to form a part of the cut line CL in the light distribution pattern P1 is provided on a front end in an upper end of the second reflecting portion 18. Therefore, it is possible to form a clear cut line CL in the light distribution pattern P1.

[0041] On the other hand, when a high beam is irradiated, the projection lens 26 is moved to the second position H so that the rear focal point of the projection lens 26 positions on the second location on the light emitting surfaces of the light emitting diodes 15, 15, ···.

[0042] Fig. 5 is a view showing a state in which the high beam is irradiated in the vehicle headlamp 1. In Fig. 5, referring to the light A directing toward the central part of the projection lens 26, the light B reflected by the front end of the reflecting surface 17a and directing toward the projection lens 26, and the light C reflected by the front end of the reflecting surface 18a and directing toward the projection lens 26 in the lights emitted from the light emitting surfaces of the light emitting diodes 15, 15, ···, respective optical paths are shown in arrows. Moreover, Fig. 6 is a view showing a light distribution pattern P2 in the irradiation of the high beam.

[0043] When the rear focal point of the projection lens 26 positions on the second location on the light emitting surfaces of the light emitting diodes 15, 15, ···, the lights emitted from the light emitting diodes 15, 15, ··· direct toward the projection lens 26 so that the irradiated light forming the light distribution pattern P2 of the high beam is irradiated from the projection lens 26 (see Fig 5). The light A is projected onto the horizontal line HL by the projection lens 26, the light B is projected onto a part provided below the light A and the light C is projected onto a part provided above the light A.

[0044] Although the description has been given to the example in which the reflecting surface 17a is formed as the hyperbolic surface and the reflecting surface 18a is formed as the parabolic surface, both of the reflecting

surfaces 17a and 18a may be formed as the parabolic surfaces, and furthermore, the reflecting surface 17a may be formed as the parabolic surface and the reflecting surface 18a may be formed as the hyperbolic surface.

[0045] Fig. 7 is a view showing the optical paths of the lights emitted from the light emitting diodes 15, 15, ··· in the case in which the reflecting surface 17a is formed as the hyperbolic surface and the reflecting surface 18a is formed as the parabolic surface, for example, and Fig. 8 is a view showing the optical paths of the lights emitted from the light emitting diodes 15, 15, ··· in the case in which both of the reflecting surfaces 17a and 18a are formed as the parabolic surfaces, for example.

[0046] By causing the reflecting surfaces 17a and 18a to have a structure in which the parabolic and hyperbolic surfaces are optionally combined with each other, thus, it is possible to form a desirable light distribution pattern.

[0047] A modification of the light source body will be described below (see Fig. 9).

[0048] A light source body 13A according to the modification is constituted by a first reflecting portion 17 and a second reflecting portion 18A which are positioned by vertically separating a reflector 16A, and the second reflecting portion 18A provided on a lower side has three reflectable surfaces.

[0049] The reflecting portion 18A is provided with a first reflecting surface 18b and a second reflecting surface 18c which are provided apart from each other in a transverse direction, and a step surface 18d having both of left and right ends linked to the first reflecting surface 18b and the second reflecting surface 18c between the first reflecting surface 18b and the second reflecting surface 18c. The step surface 18d is tilted to the first reflecting surface 18b and the second reflecting surface 18c.

[0050] In the vehicle headlamp 1 in which the light source body 13A is used, the projection lens 26 is moved to the first position L when a low beam is irradiated, and the rear focal point of the projection lens 26 positioned on a first location on a front end of the second reflecting portion 18A. Moreover, the projection lens 26 is moved to the second position H when a high beam is irradiated, and the rear focal point of the projection lens 26 positioned on a second location on the light emitting surfaces of the light emitting diodes 15, 15, ···.

[0051] When the rear focal point of the projection lens 26 is formed on the front end of the second reflecting portion 18A, a part of the lights emitted from the light emitting diodes 15, 15, ··· is reflected by the first reflecting surface 18b, the second reflecting surface 18c and the step surface 18d so that the cut line CL in the light distribution pattern P1 of the low beam is formed.

[0052] Accordingly, the lights emitted from the light emitting diodes 15, 15, ··· are not shielded but are projected from the projection lens 26. Therefore, it is possible to enhance a utilization efficiency of a light.

[0053] As described above, in the vehicle headlamp 1, relative positions of the light source bodies 13 and 13A for emitting a light and the projection lens 26 for projecting and irradiating the lights emitted from the light source bodies 13 and 13A are varied so that an irradiating direction of the lights emitted from the light source bodies 13 and 13A and projected by the projection lens 26 are changed.

[0054] Accordingly, it is not necessary to provide a shade, a shade driving mechanism and a space for disposing them in order to switch the light distribution pattern. Thus, it is possible to reduce a size and to cut down a manufacturing cost.

[0055] Next, a vehicle headlamp 1 B according to a second embodiment will be described (see Figs. 10 to 14).

[0056] The vehicle headlamp 1 B which will be described below is different from the vehicle headlamp 1 of the first embodiment in that a projection lens is not provided but a reflecting mirror for reflecting a light emitted from a planar light source is disposed, and structures of an irradiating direction changing mechanism and a light source body are different.

[0057] Referring to the vehicle headlamp 1 B, accordingly, only different portions from the vehicle headlamp 1 will be described in detail and the other portions have the same reference numerals as the same parts in the vehicle headlamp 1 and description will be omitted or brief description will be given if necessary.

[0058] As shown in Fig. 10, the vehicle headlamp 1B has a outer casing 4 constituted by a lamp body 2 and a cover 3, and a lamp unit 6B is disposed in a lamp housing 5.

[0059] A holding member 7B is disposed in the lamp housing 5 tiltably in a horizontal direction and a vertical direction through an optical axis adjusting mechanism 8B.

[0060] The holding member 7B has a base portion 9, an attached protrusion 10 and a light source support portion 33 protruded forward from an upper end of the base portion 9. The light source support portion 33 is formed in a plate shape directing in a vertical direction.

[0061] Radiation fins 11, 11, ··· protruded upward are provided on an upper surface of the light source support portion 33 apart from each other in a longitudinal direction. A radiating fan 12 is attached to upper surfaces of the radiation fins 11, 11, ···.

[0062] A light source body 13B is attached to a lower surface of the light source support portion 33.

[0063] The light source body 13B has a circuit board 14, light emitting diodes 15, 15, ... and a reflector 16B. The light emitting diodes 15, 15, ··· have light emitting surfaces directing downward.

[0064] The reflector 16B does not include the first reflecting portion 17 but is constituted by only a reflecting portion 18B having the same structure as that of the second reflecting portion 18 of the reflector 16 differently from the reflector 16, and the reflecting portion 18B is disposed on a front side of the light emitting diodes 15, 15, ···. A surface positioned on a rear side of the reflecting portion 18B is formed as a reflecting surface 18a.

[0065] An irradiating direction changing mechanism 20B is attached to the base portion 9 of the holding member 7B. The irradiating direction changing mechanism 20B has a support shaft 34 and driving means 22.

[0066] The support shaft 34 is protruded obliquely downward from a central part of the base portion 9.

[0067] A shaft portion 24 of the driving means 22 is positioned in a parallel state with the support shaft 34.

[0068] A reflecting mirror 35 functioning as an optical component is movably supported on the irradiating direction changing mechanism 20B. The reflecting mirror 35 has a reflecting portion 36, a first supported portion 37 which is protruded from the reflecting portion 36, and a second supported portion 38 which is protruded from the reflecting portion 36 and is positioned below the first supported portion 37. A reflecting source 36a is formed in the reflecting portion 36.

[0069] The reflecting mirror 35 is movably supported on the irradiating direction changing mechanism 20B by inserting the support shaft 34 into the first supported portion 37 in a slidable state and screwing the second supported portion 38 into a screwing shaft portion 24a of the driving means 22.

[0070] When the shaft portion 24 of the driving means 22 is rotated, the second supported portion 38 is fed in a corresponding direction to a rotating direction thereof and the first supported portion 37 is guided by the support shaft 34 so that the reflecting mirror 35 is moved between a first position L and a second position H. At this time, depending on the position of the reflecting mirror 35, a focal point of the reflecting surface 36a moves between a first location on the reflecting portion 18B and a second location on the light emitting surfaces of the light emitting diodes 15, 15, ···.

[0071] In the vehicle headlamp 1 B, the lamp unit 6B is constituted by the holding member 7B, the radiation fins 11, 11, ···, the radiating fan 12, the light source body 13B, the irradiating direction changing mechanism 20B and the reflecting mirror 35.

[0072] The optical axis adjusting mechanism 8B has aiming screws 27, 27 and 27. Also in the vehicle headlamp 1B according to the second embodiment, the optical axis adjusting mechanism 8 may be used in place of the optical axis adjusting mechanism 8B. To the contrary, in the vehicle headlamp 1 according to the first embodiment, the optical axis adjusting mechanism 8B may be used in place of the optical axis adjusting mechanism 8.

[0073] In the vehicle headlamp 1B having the structure described above, lights emitted from the light emitting diodes 15, 15, ··· direct downward or are reflected by the reflecting surface 18a and are thus collected onto a focal plane including the focal point of the reflecting surface 36a. The lights thus collected are reflected by the reflecting mirror 35, and are transmitted through the cover 3 and are thus irradiated forward.

[0074] In the vehicle headlamp 1B, when a low beam is irradiated, the reflecting mirror 35 is moved to the first position L so that the focal point of the reflecting surface 36a positioned on the first location on the lower end of the reflecting portion 18B.

[0075] Fig. 11 is a view showing a state in which the low beam is irradiated in the vehicle headlamp 1B. In Fig. 11, referring to a light D emitted from the light emitting surfaces of the light emitting diodes 15, 15, ··· and directing toward the reflecting surface 36a and a light E emitted from the light emitting surfaces of the light emitting diodes 15, 15, ···, reflected by the lower end of the reflecting surface 18a and directing toward the reflecting surface 36a, respective optical paths are shown in arrows. Moreover, Fig. 12 is a view showing a light distribution pattern P1 in the irradiation of the low beam.

[0076] When the focal point of the reflecting surface 36a positions on the first location on the lower end of the reflecting portion 18B, the light emitted from the light emitting diodes 15, 15, ··· is reflected by the reflecting mirror 35 so that an irradiated light for forming a light distribution pattern P1 of a low beam including a cut line CL is irradiated (see Fig. 12). The light D is irradiated on a slightly lower side of a horizontal line HL by the reflecting mirror 35 and the light E is irradiated on the cut line CL.

[0077] On the other hand, when a high beam is irradiated, the reflecting mirror 35 is moved to a second position H so that the focal point of the reflecting surface 36a positions on the second location on the light emitting surfaces of the light emitting diodes 15, 15, ···.

[0078] Fig. 13 is a view showing a state in which the high beam is irradiated in the vehicle headlamp 1 B. In Fig. 13, referring to the lights D and F emitted from the light emitting surfaces of the light emitting diodes 15, 15, ··· and directing toward the reflecting surface 36a and the light E reflected by the reflecting surface 18a and directing toward the reflecting surface 36a, respective optical paths are shown in arrows. The lights D and F are emitted from the light emitting surfaces of the light emitting diodes 15, 15, ··· in different positions. Moreover, Fig. 14 is a view showing a light distribution pattern P2 in the irradiation of the high beam.

[0079] When the focal point of the reflecting surface 36a positions on the second location on the light emitting surfaces of the light emitting diodes 15, 15, ··· , the lights emitted from the light emitting diodes 15, 15, ··· are reflected by the reflecting mirror 35 so that an irradiated light for forming the light distribution pattern P2 of the high beam is irradiated (see Fig. 14). The light F is irradiated on the horizontal line HL by the reflecting mirror 35, the light D is irradiated below the light F, and the light E is irradiated above the light F.

[0080] As described above, in the vehicle headlamp 1 B, the relative positions of the light source body 13B for emitting the light and the reflecting mirror 35 for reflecting the light emitted from the light source body 13B are varied so that the irradiating direction of the light emitted from the light source body 13B and reflected by the reflecting mirror 35 is changed.

[0081] Accordingly, it is not necessary to provide a shade, a shade driving mechanism and a space for dis-

posing them in order to switch the light distribution pattern. Thus, it is possible to reduce a size and to cut down a manufacturing cost.

[0082] Although the description has been given to the example in which the reflecting portion 18B of the reflector 16B has the same structure as that of the second reflecting portion 18 of the reflector 16, the reflecting portion of the reflector 16B can also have the same structure as that of the second reflecting portion 18A of the reflector 16A.

[0083] Moreover, the description has been given to the example in which the projecting lens 26 or the reflecting mirror 35 is moved with respect to the light source bodies 13, 13A and 13B so that their relative positions are varied in the vehicle headlamp 1 and the vehicle headlamp 1B. To the contrary, it is also possible to employ a structure in which the light source bodies 13, 13A and 13B are moved with respect to the projection lens 26 or the reflecting mirror 35 so that their relative positions are varied.

[0084] In the case of the structure in which the light source bodies 13, 13A and 13B are moved, it is necessary to form an electric conduction structure for the light source bodies 13, 13A and 13B to be moved. Correspondingly, there is a possibility that the electric conduction structure might be complicated.

[0085] By employing the structure in which the projection lens 26 or the reflecting mirror 35 is moved, accordingly, it is possible to simplify the electric conduction structure for the light source bodies 13, 13A and 13B. Thus, it is possible to simplify the mechanisms in the vehicle headlamps 1 and 1 B and to cut down a manufacturing cost still more.

[0086] The shapes and structures of the respective portions described in the best mode are only illustrative for an implementation for carrying out the invention and the technical range of the invention should not be thereby construed to be restrictive.

[0087] In accordance with the above embodiments and the modification, a vehicle headlamp 1, 1B may include: a light source body 13, 13A, 13B including a planar light source 15 for emitting a light and a reflector 16, 16A, 16B for reflecting the light emitted from the planar light source 15; and an optical component 26, 35 having a focal point and adapted to reflect or project the light from the planar light source 15. A relative position between the light source body 13, 13A, 13B and the optical component 26, 35 may be variable so that the focal point of the optical component 26, 35 moves between a first location on the reflector 16, 16A, 16B and a second location on the planar light source 15, and an irradiating direction of the light emitted from the planar light source and reflected or projected by the optical component is changed.

[0088] According to this structure, a light distribution pattern is switched depending on a variation of the relative position of the light source body and the optical component.

[0089] In addition, according to the structure, it is not necessary to provide a shade, a shade driving mechanism and a space for disposing them in order to switch a light distribution pattern. Consequently, it is possible to reduce a size and to cut down a manufacturing cost.

[0090] In the above structure, the optical component may include a projection lens 26 for projecting the light from the planar light source 15 in a forward direction, and the projection lens 26 may be movable so that a rear focal point of the projection lens 26 moves between the first location and the second location.

[0091] According to this structure, an electric conduction structure to the light source body can be simplified. Thus, it is possible to simplify a mechanism in the vehicle headlamp and to cut down a manufacturing cost still more.

[0092] In the above structure, the planar light source may include a plurality of light emitting diodes 15 aligned in a predetermined direction. The reflector 16 may include two reflecting portions 17, 18, and the two reflecting portions 17, 18 may be apart from each other in a vertical direction while the planar light source 15 interposing therebetween. A shielding wall 19 for shielding a part of the light from the planar light source 15 so as to form a part of a cut line CL in a light distribution pattern P1 may be provided on a front end of one 18 of the reflecting portions 17, 18.

[0093] According to this structure, a part of the light emitted from the light emitting diode is shielded by the shielding wall. Consequently, it is possible to form a clear cut line in a light distribution pattern.

[0094] In the above structure, the planar light source may include a plurality of light emitting diodes 15 aligned in a predetermined direction. The reflector 16A may include two reflecting portions 17, 18A, and the two reflecting portions 17, 18A may be apart from each other in a vertical direction while the planar light source 15 interposing therebetween. One 18A of the reflecting portions 17, 18A may include a first reflecting surface 18b, a second reflecting surface 18c, and a step surface 18d. The first reflecting surface 18b and the second reflecting surface 18c may be apart from each other in a transverse direction and adapted to reflect the light from the planar light source 15. The step surface 18d may position between the first reflecting surface 18b and the second reflecting surface 18c, and may include both of left and right ends respectively connected to the first reflecting surface 18b and the second reflecting surface 18c.

[0095] According to this structure, the lights emitted from the light emitting diodes are not shielded but are projected from the projection lens. Consequently, it is possible to enhance a utilization efficiency of a light.

[0096] In the above structure, the optical component may include a reflecting mirror 35 for reflecting the light from the planar light source 15. The reflecting mirror 35 may be movable so that a focal point of the reflecting mirror moves between the first location and the second location.

[0097] Therefore, an electric conduction structure to the light source body can be simplified. Thus, it is possible

to simplify a mechanism in the vehicle headlamp and to cut down a manufacturing cost still more.
The features of all embodiments and all dependent claims can be combined with each other as long as they do not contradict each other.

[Explanation of Reference Numerals and Signs]

[0098]

1	Vehicle headlamp
13	light source body
15	light emitting diode
16	reflector
26	projection lens
17	first reflecting portion
18	second reflecting portion
19	shielding wall
P1	light distribution pattern
P2	light distribution pattern
CL	cut line
16A	reflector
18A	second reflecting portion
18b	first reflecting surface
18c	second reflecting surface
18d	step surface
1B	Vehicle headlamp
13B	light source body
16B	reflector
18B	reflecting portion
35	reflecting mirror

Claims

1. A vehicle headlamp (1, 1 B) comprising:

a light source body (13, 13A, 13B) including a planar light source (15) for emitting a light and a reflector (16, 16A, 16B) for reflecting the light emitted from the planar light source (15); and
an optical component (26, 35) having a focal point and adapted to reflect or project the light from the planar light source (15),
wherein a relative position between the light source body (13, 13A, 13B) and the optical component (26, 35) is variable so that the focal point of the optical component (26, 35) moves between a first location on the reflector (16, 16A, 16B) and a second location on the planar light source (15) and an irradiating direction of the light emitted from the planar light source and reflected or projected by the optical component is changed.

2. The vehicle headlamp (1) according to claim 1, wherein the optical component comprises a projection lens (26) for projecting the light from the planar light source (15) in a forward direction, and the projection lens (26) is movable so that a rear focal point of the projection lens (26) moves between the first location and the second location.

3. The vehicle headlamp (1) according to claim 2, wherein the planar light source comprises a plurality of light emitting diodes (15) aligned in a predetermined direction,
wherein the reflector (16) includes two reflecting portions (17, 18) and the two reflecting portions (17, 18) are apart from each other in a vertical direction while the planar light source (15) interposing therebetween, and
wherein a shielding wall (19) for shielding a part of the light from the planar light source (15) so as to form a part of a cut line (CL) in a light distribution pattern (P1) is provided on a front end of one (18) of the reflecting portions (17, 18).

4. The vehicle headlamp (1) according to claim 2, wherein the planar light source comprises a plurality of light emitting diodes (15) aligned in a predetermined direction,
wherein the reflector (16A) includes two reflecting portions (17, 18A) and the two reflecting portions (17, 18A) are apart from each other in a vertical direction while the planar light source (15) interposing therebetween,
wherein one (18A) of the reflecting portions (17, 18A) includes a first reflecting surface (18b), a second reflecting surface (18c), and a step surface (18d),
wherein the first reflecting surface (18b) and the second reflecting surface (18c) are apart from each other in a transverse direction and adapted to reflect the light from the planar light source (15), and
wherein the step surface (18d) positions between the first reflecting surface (18b) and the second reflecting surface (18c) and includes both of left and right ends respectively connected to the first reflecting surface (18b) and the second reflecting surface (18c).

5. The vehicle headlamp (1 B) according to claim 1, wherein the optical component comprises a reflecting mirror (35) for reflecting the light from the planar light source (15), and
wherein the reflecting mirror (35) is movable so that a focal point of the reflecting mirror moves between the first location and the second location.

FIG. 1

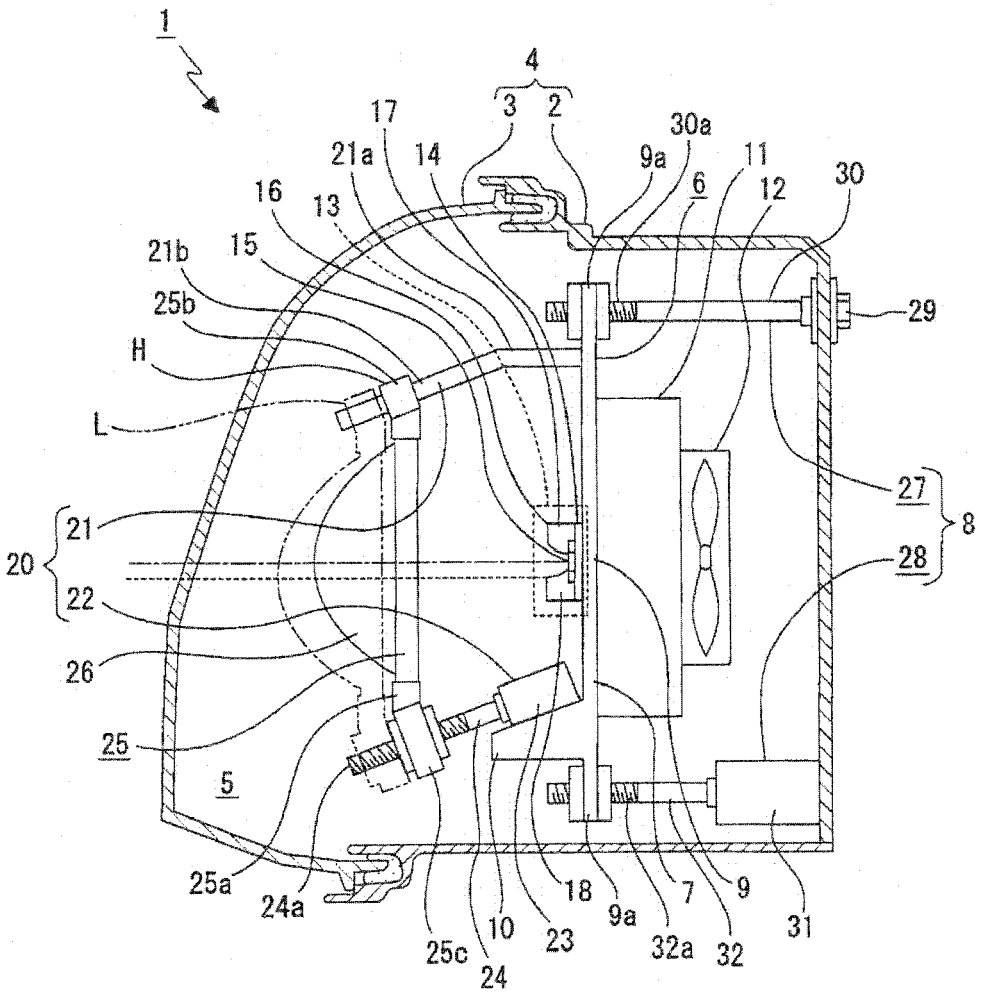
1
4
3
2
17
21a
14
16
13
15
21b
25b
H
L
30a
9a
6
11
12
30
29
27
8
28
20
21
22
26
25
5
25a
24a
25c
10
24
23
18
9a
7
32a
9
32
31

FIG.2

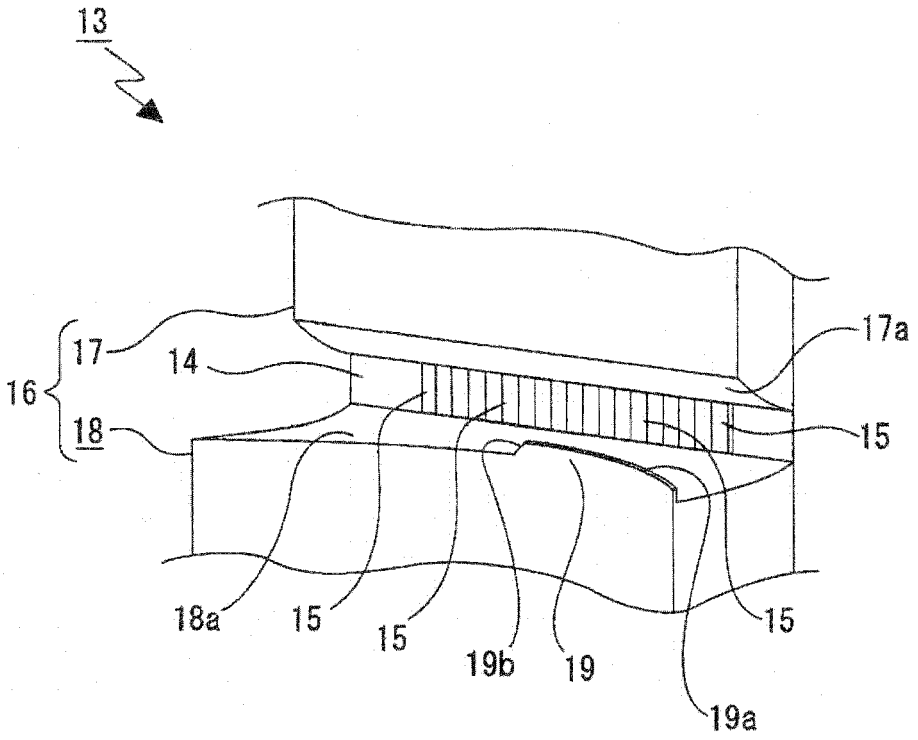

FIG.3

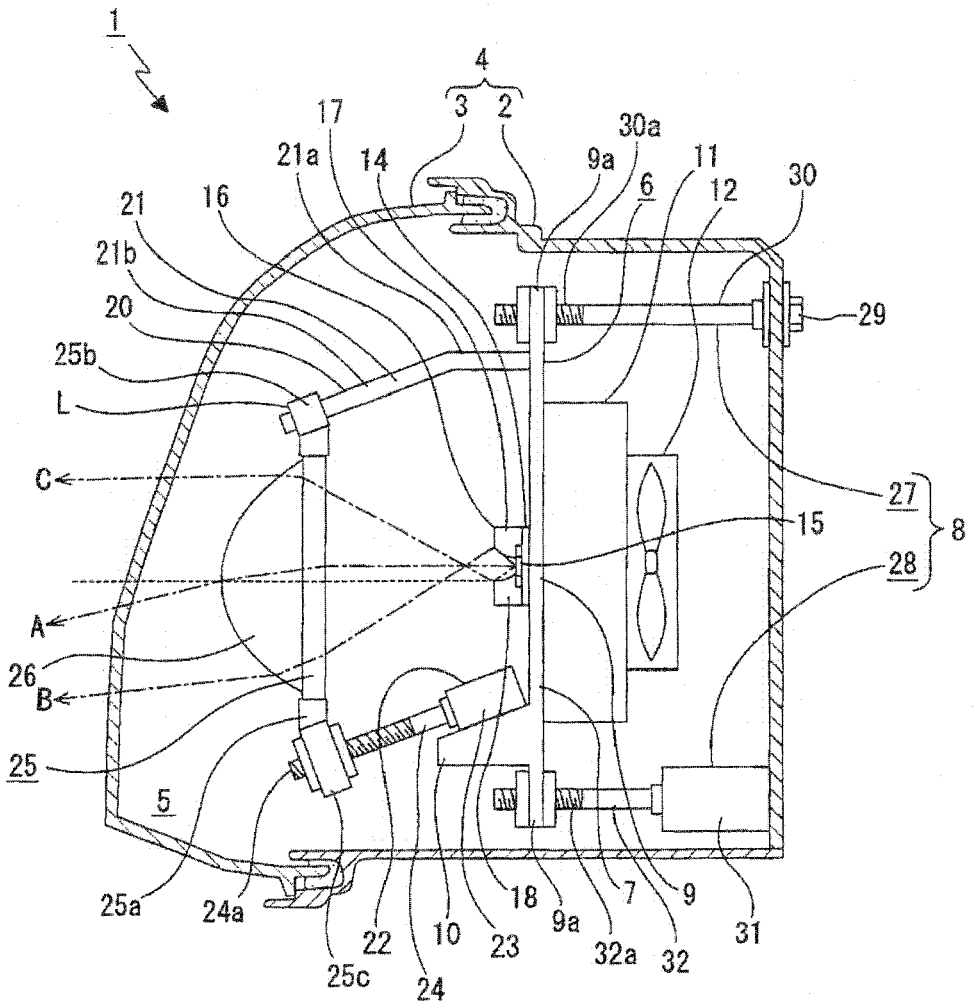
1
4
3
2
17
21a
14
30a
9a
11
12
30
6
21
16
21b
20
29
25b
L
C
27
8
15
28
A
26
B
25
5
25a
24a
22
10
18
9a
7
9
31
25c
24
23
32a
32

FIG.4

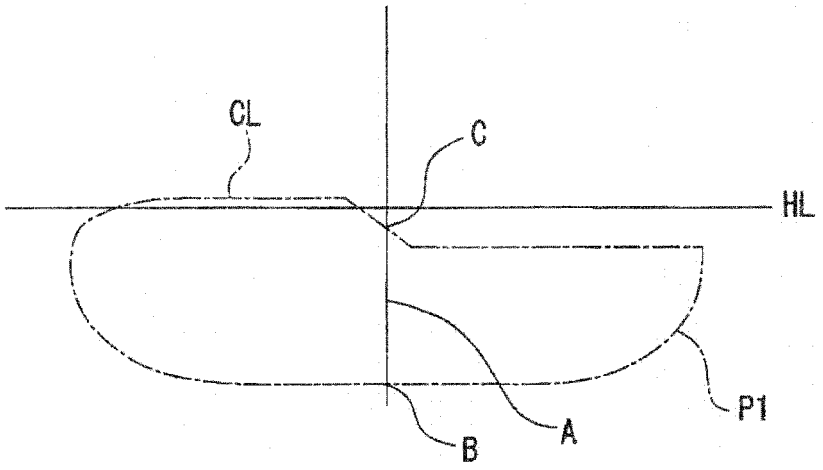

FIG.5

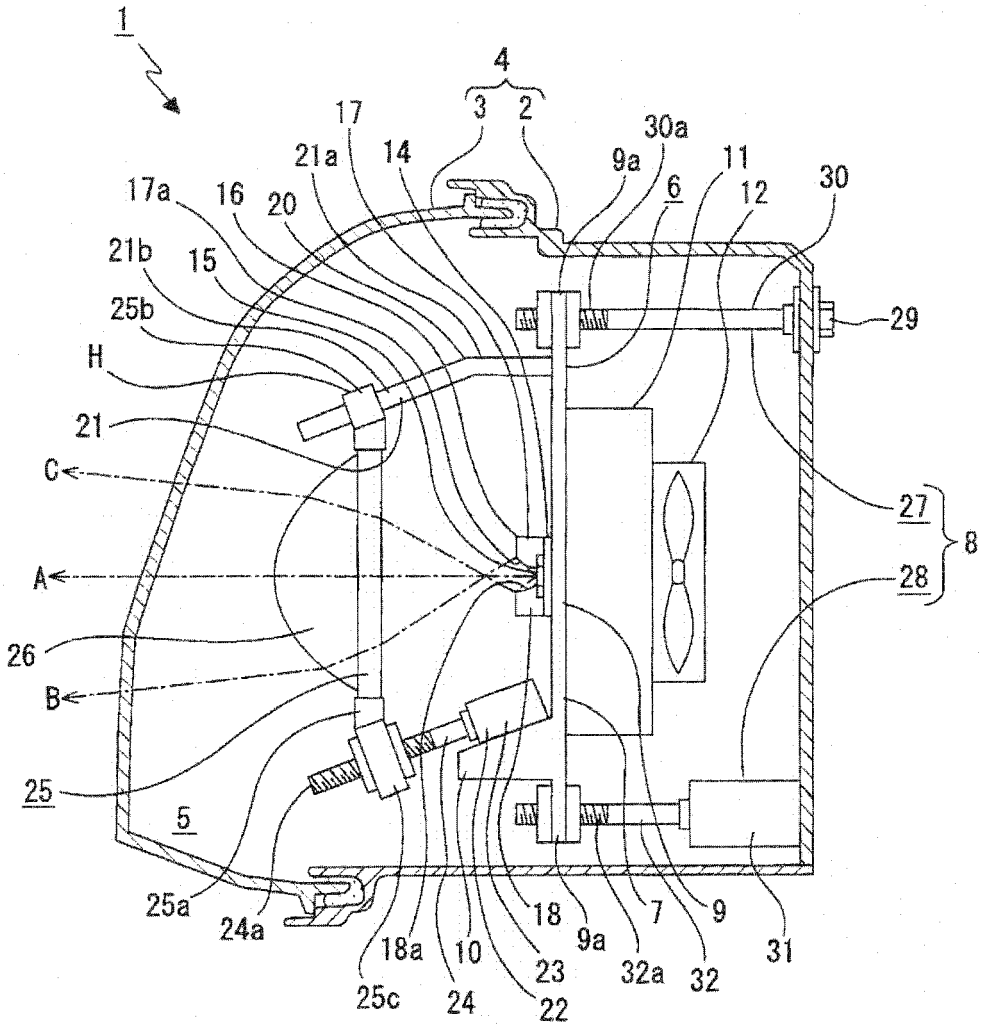
1
4
3
2
17
21a
14
30a
9a
11
30
17a
16
20
6
12
21b
15
25b
29
H
21
C
27
8
A
28
26
B
25
5
25a
24a
18
9a
7
9
31
18a
10
23
32a
32
25c
24
22

FIG.6

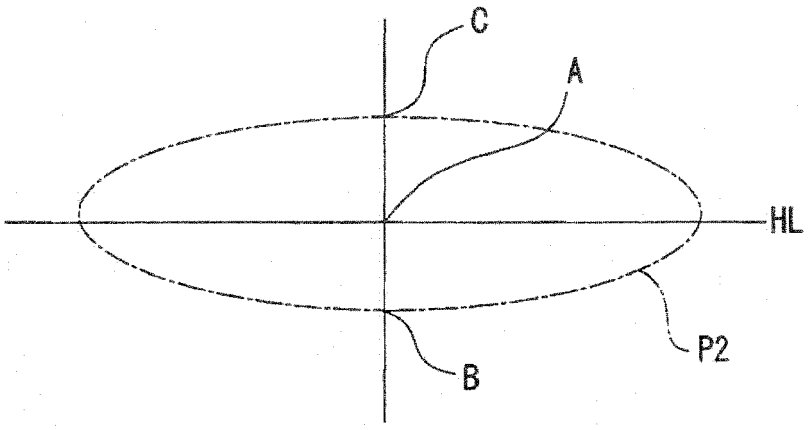

FIG. 7

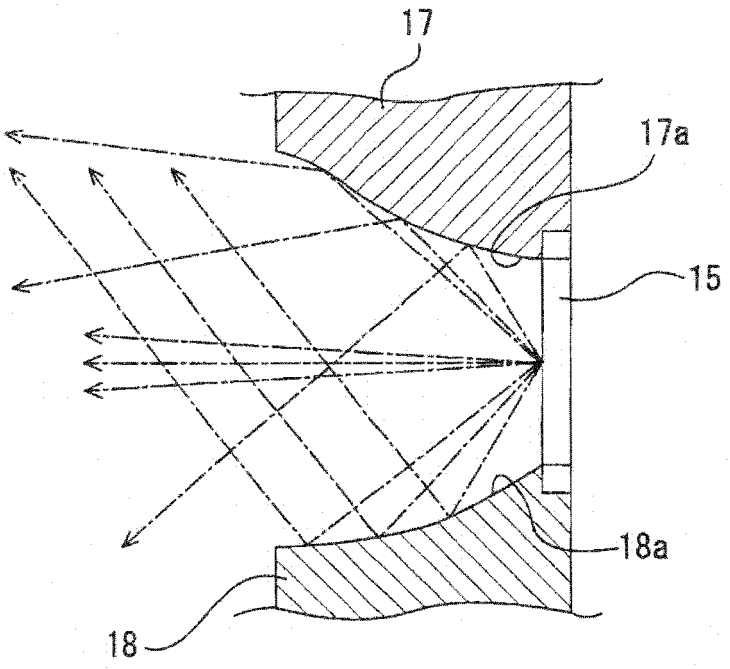

FIG.8

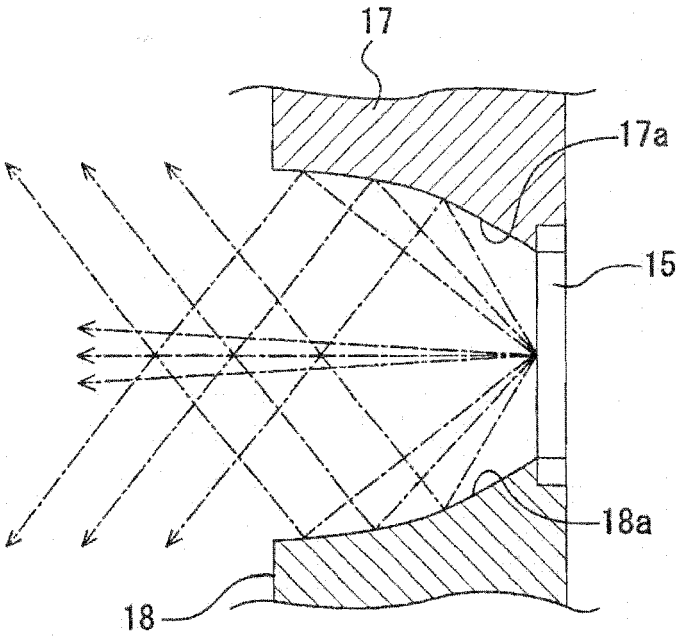

FIG.9

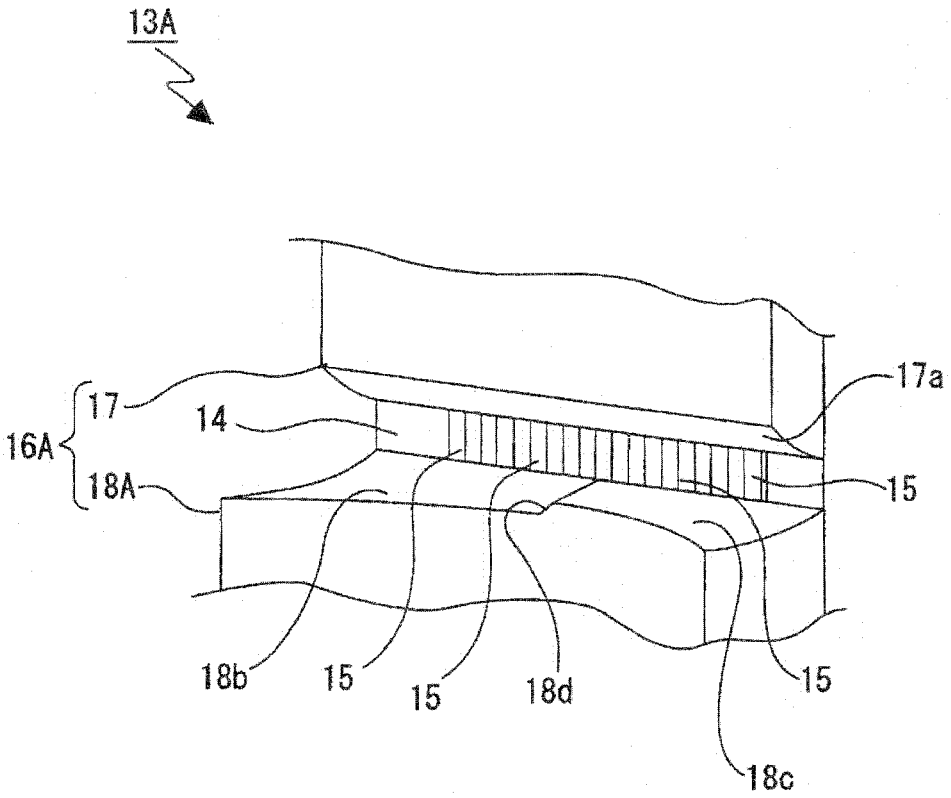

FIG. 10

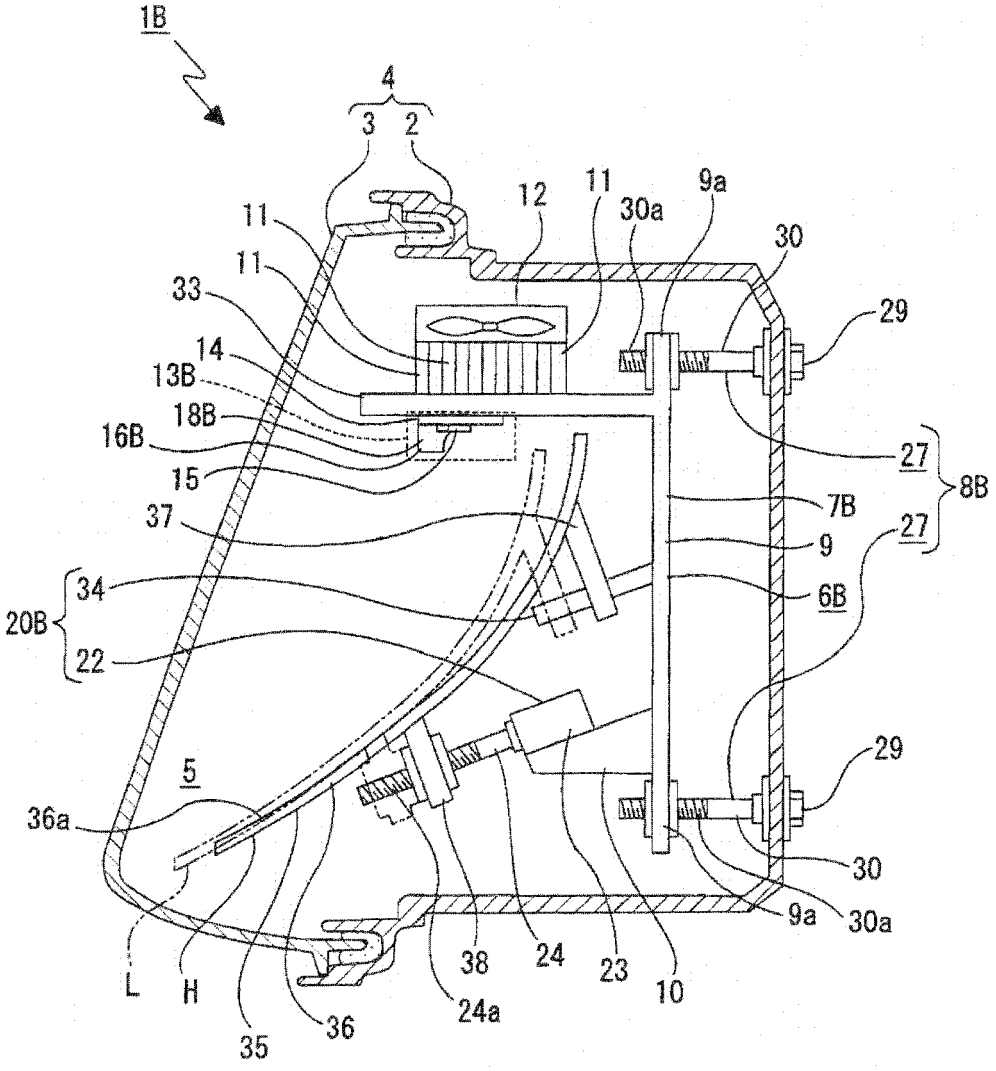
1B
4
3
2
12
11
9a
30a
30
11
11
33
14
13B
18B
16B
15
29
27
8B
7B
37
9
27
34
20B
22
6B
5
36a
29
30
9a
30a
L
H
35
36
24a
38
24
23
10

FIG. 11

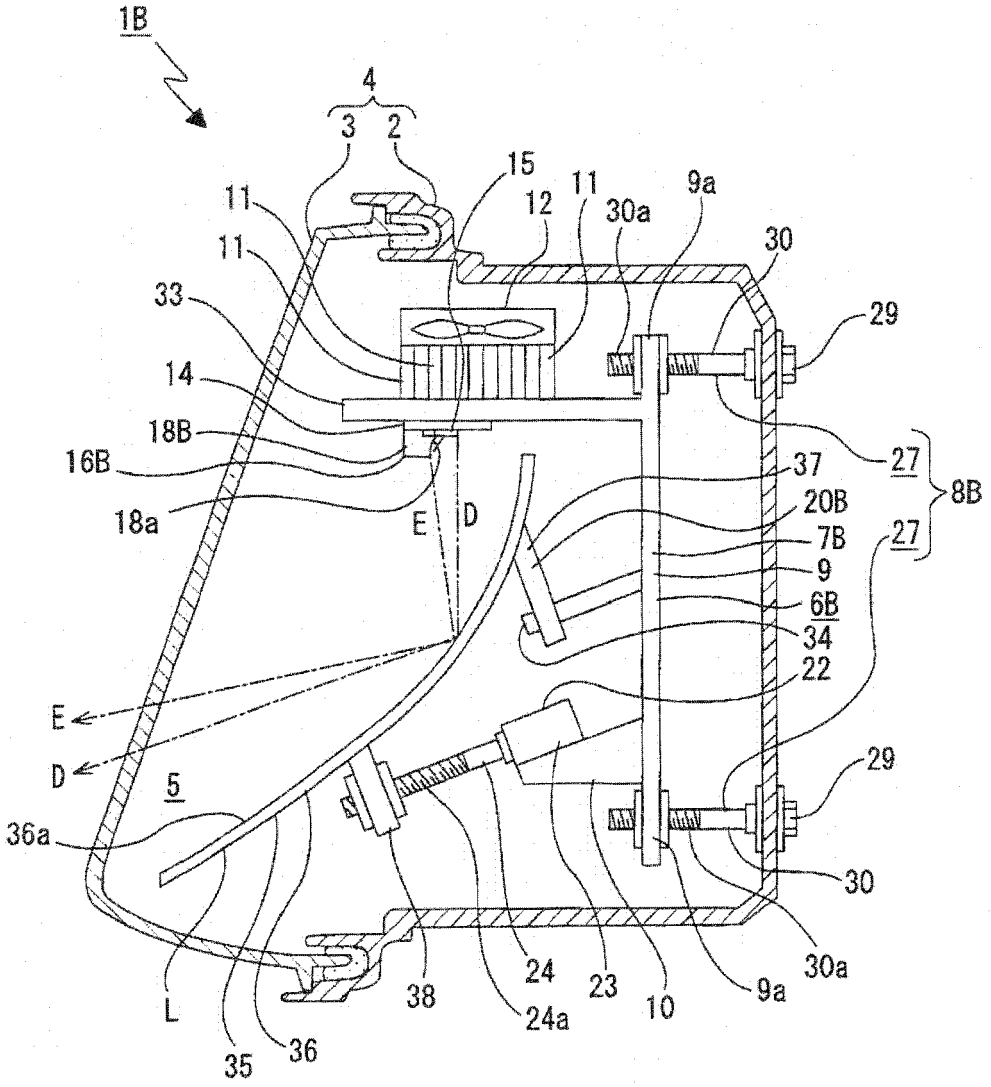
1B
4
3
2
15
11
12
11
30a
9a
30
11
33
29
14
18B
16B
18a
E
D
37
27
8B
20B
7B
9
6B
34
22
27
E
D
5
29
36a
30
30a
L
35
36
38
24
24a
23
10
9a

FIG. 12

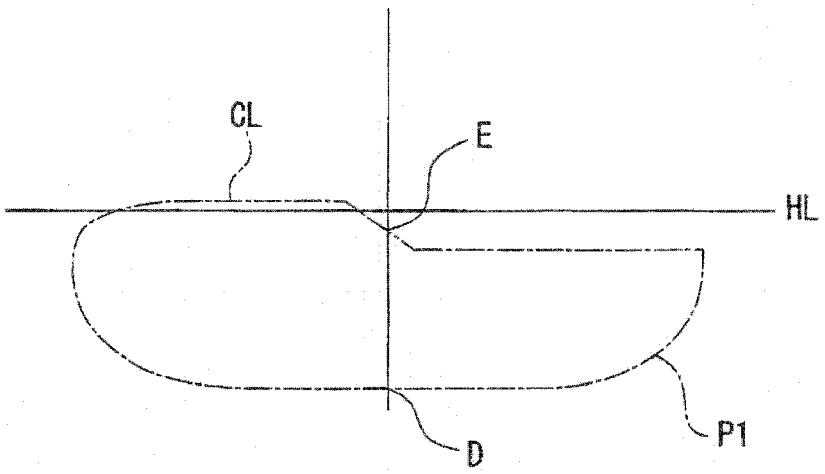

FIG. 13

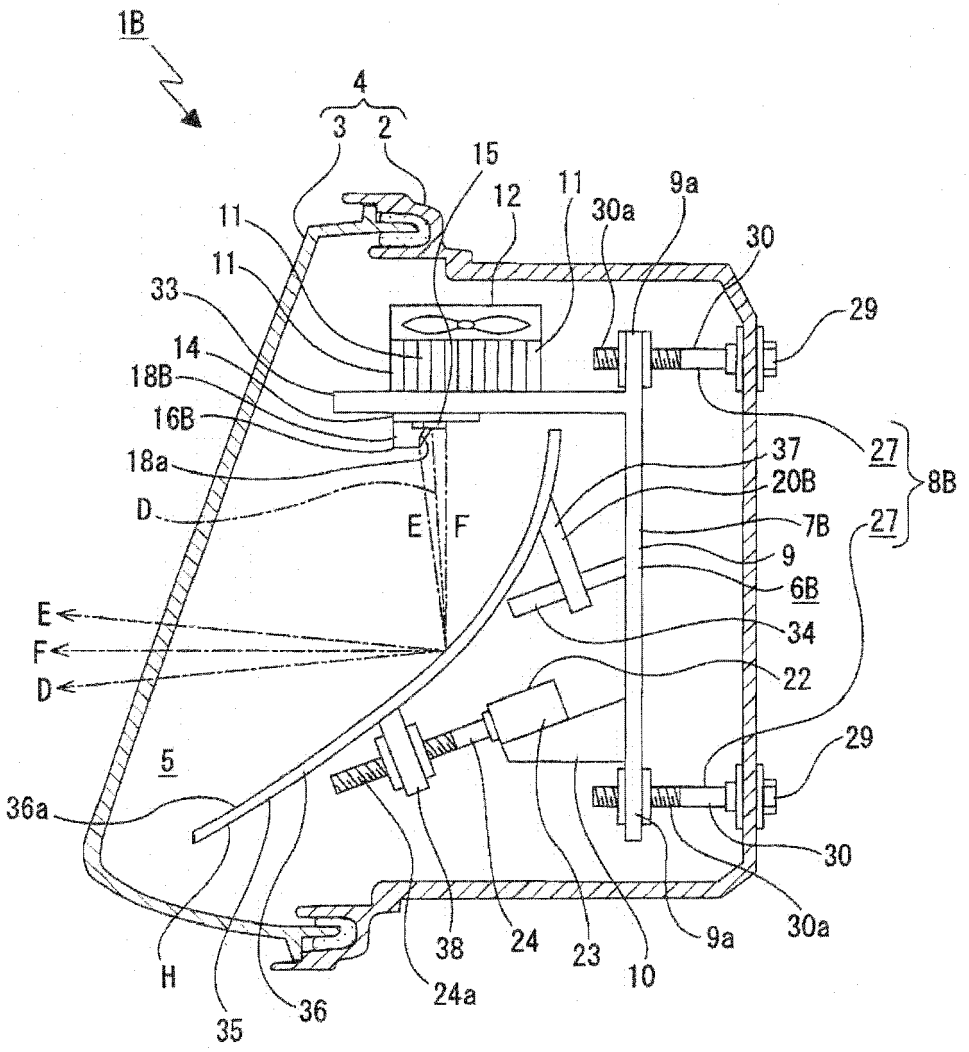
1B
4
3
2
15
12
11
30a
9a
30
11
11
33
14
18B
16B
18a
D
29
27
8B
37
20B
7B
9
6B
34
22
E
F
D
5
36a
H
35
36
24a
38
24
23
10
9a
30a
30
29
27

FIG. 14

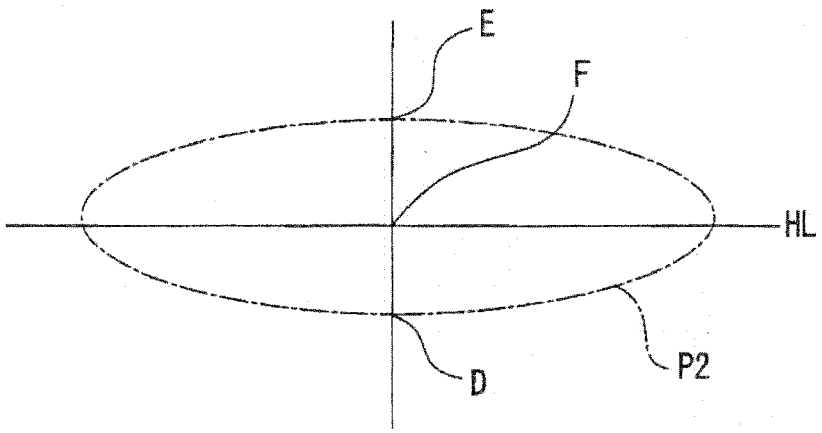

REFERENCES CITED IN THE DESCRIPTION

This list of references cited by the applicant is for the reader's convenience only. It does not form part of the European patent document. Even though great care has been taken in compiling the references, errors or omissions cannot be excluded and the EPO disclaims all liability in this regard.

Patent documents cited in the description

- JP 2010153333 A **[0002] [0003] [0004] [0005]**