J. J. M. GUEUX.

APPARATUS FOR CONTROLLING THE FLOW OF FLUIDS THROUGH CONDUITS,

APPLICATION FILED FEB. 24, 1914.

1,159,214. Patented Nov. 2, 1915.

Fig. 1.

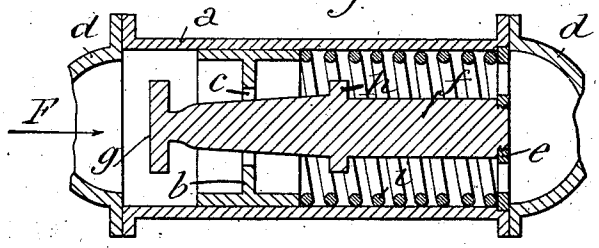

Fig. 2.

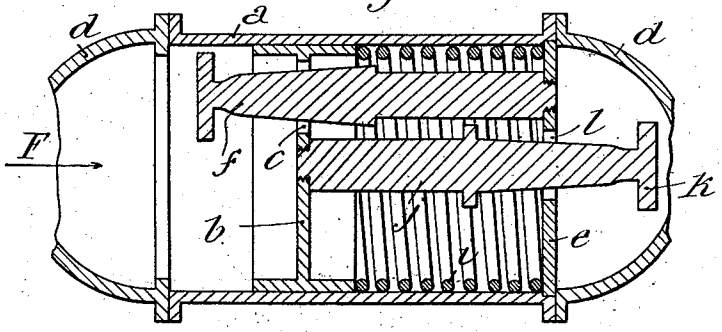

Fig. 3.

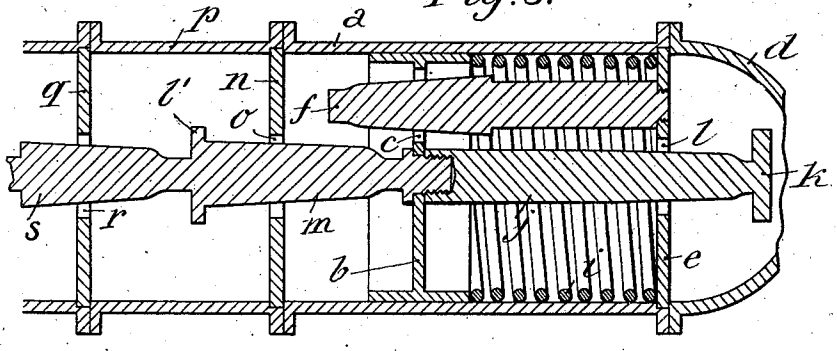

Fig. 4.

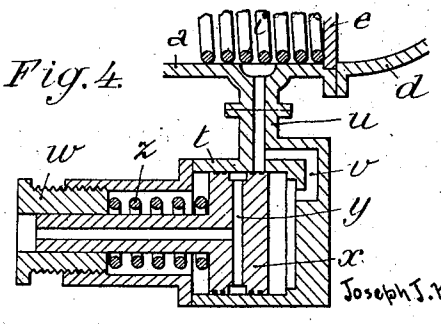

Witnesses

D. H. Johnson

L. Morrill

Inventor

Joseph J. M. Gueux.

By

Mason, Fenwick & Lawrence

Attorneys,

UNITED STATES PATENT OFFICE.

JOSEPH JEAN MARIE GUEUX, OF PARIS, FRANCE.

APPARATUS FOR CONTROLLING THE FLOW OF FLUIDS THROUGH CONDUITS.

1,159,214. Specification of Letters Patent. Patented Nov. 2, 1915.

Application filed February 24, 1914. Serial No. 820,772.

To all whom it may concern:

Be it known that I, JOSEPH JEAN MARIE GUEUX, a citizen of the Republic of France, residing at Paris, France, have invented new and useful Improvements in or Relating to Apparatus for Controlling the Flow of Fluids Through Conduits, of which the following is a specification.

This invention relates to apparatus for use in a conduit for fluids, such as a water pipe, in order to regulate and limit the output to a constant quantity, whatever be the variations of pressure that take place in the pipe. This apparatus can also be used as a meter, as will be hereinafter explained.

Several constructions according to this invention are illustrated in the accompanying drawing in which—

Figure 1 is a longitudinal section of the device. Fig. 2 is a longitudinal section of a modified construction of the apparatus, Fig. 3 is a longitudinal section of a further construction, and Fig. 4 is a section of a device that can be used for placing the apparatus in communication with the atmosphere.

The apparatus comprises a tubular cylindrical body *a* divided into two compartments by a piston *b* provided with a central hole *c*. The body *a* is connected to the pipe at its two ends by suitable branches *d*. Near one of the ends of the body *a*, a transverse partition *e* is secured provided with holes for the escape of the fluid and provided in the center with a rod *f*, the operative portion of which is conical and can terminate at its free end in a disk *g* forming a valve, as will be explained hereinafter. A collar *h* can be arranged on the central portion of the rod, at the beginning of the cone, for the purpose of closing the orifice *c* of the piston when the latter reaches the end of its stroke toward the right (Fig. 1). The piston is controlled by an antagonistic spring *i* resting at one end against the partition *e* and having the tendency to push the piston *b* toward the left. When the fluid is admitted into the apparatus in the direction of the arrow F, its pressure acts on the piston *b* so as to move it back to an extent corresponding with the pressure in question, and the fluid then passes through the annular space between the conical portion of the rod *f* and the edge of the hole *c*; it fills the body *a* and escapes through the holes in the partition *e* into the pipe.

In view of the taper of the rod *f*, it will be seen that the farther to the right the piston is moved, the more completely the central portion of the orifice *c* will be closed by the rod *f*, the diameter of which gradually increases. It follows therefore that the greater the pressure, the smaller will be the cross-section of the passage left open, and if the dimensions of the elements have been properly determined, the output of the fluid will be constant at any pressure. If the latter becomes too strong, the diaphragm piston provided with the hole *c*, will press against the collar *h* and close the hole *c* so that the output is stopped. If the pipe breaks at a point upstream of the apparatus, there will be produced at that side a depression which will result in the spring *i* immediately moving the piston to that side, and the piston will press against the disk *g* and close the hole *c* and thus prevent the contents of the portion of the conduit situated below stream, from passing through the apparatus and escaping through the break. If the breakage takes place below stream, the pressure above stream will cause the piston *b* to press against the collar *h*, and so stop the escape. This arrangement which is suitable for simple installations and comparatively small pressures, may not be sufficient in other cases, and then the construction shown in Fig. 2 could be used, in which the rod *f* is no longer in the center of the partition *e*, but at the side of the latter, while the piston *b* is provided with a central rod *j*, the operative portion of which is conical, and can terminate in a disk *k*, in order to close the central orifice *l* provided in the partition *e* for the passage of the rod *j*.

In this construction, the fluid arriving in the direction of the arrow F, first passes through the orifice *c* of the piston, fills the second portion of the body *a* and escapes through the orifice *l*. The conical portions of the rods *f* and *j* are of equal length and of the same cross-section, and the hole *l* is of a diameter equal to that of the hole *c*, so that the fluid in its passage, meets two resistances instead of only one, as in the construction previously described, which results in the effect of the pressure changes being less sudden.

In the case of a breakage or leak in the pipe, either above or below stream, the phenomena hereinbefore described are repro-

duced, in which case the orifice c can be closed by the disk g, and the orifice l by the disk k.

When larger differences of pressure have to be dealt with, the arrangement shown in Fig. 3 can be used, which differs from that previously described in certain respects, especially by the fixing of a second conical rod m to the center of the piston b, and by the fixing, in front of the body a, of a partition n provided with a central hole o for the passage of the rod m. In this case, the fluid, in its passage, meets three resistances, as it has to pass the orifices o, c and l, the cross-section of which is equal and, is the smaller, the greater the pressure. This latter arrangement is suitable in the majority of cases, but nevertheless when very high pressures are involved which, in the case of a sudden stoppage of the output for any reason, may produce hammering, the tubular body a is extended in front of the apparatus by a tubular portion p of the same diameter, formed by several elements arranged side by side and clamping between them, two by two, a partition q similar to the other partitions and provided with a central hole r. The central rod m is extended to form corresponding conical portions s which will close the orifices r to an extent corresponding with the pressure. In these circumstances, the fluid will have already undergone a series of resistances, and consequently losses of head, before reaching the apparatus proper, that is to say the partition n, and consequently no hammering is to be feared. It will be understood, on the other hand, that the greater the number of conical rods and orifices regulated thereby, the greater will be the sensitiveness and regularity of the apparatus.

The apparatus is generally regulated by its spring i for working at given differences of pressure. Thus, it can be regulated for a pressure of 40 kg. per sq. centimeter at the inlet, and a pressure of 15 kg. at the outlet; this difference being due to the losses of head in the apparatus, which result in the pressures varying in the various compartments formed by the partitions and by the piston. In these conditions, when the pressure at the outlet sinks below 15 kg. it is necessary that the drawing of water should cease, because a greater quantity of fluid would then escape than is provided for. The disks such as g or k properly close the apparatus in these conditions, but cannot insure an absolute closing, and in order to obviate the drawback in question, the tubular body a is provided with the device shown in Fig. 4, which consists of a small cylinder t connected to the tubular body by a conduit u on which another part v is connected opening behind the piston x arranged in the cylinder t. This piston itself is provided with an angular conduit y communicating with the atmosphere, and exposed to the action of an antagonistic spring z, the tension of which can be regulated by a nut w screwed into a branch of the cylinder t, as shown in the drawing. By screwing or unscrewing the said nut w, the tension of the spring z is easily regulated, and assuming the example previously mentioned, the said spring can be regulated so that it should be able to overcome a pressure of 15 kg. In normal working, the pressure being greater than that figure, the fluid enters through the conduits u and v behind the piston x in order to push the latter to the left (Fig. 4) and to move the conduit y away from the conduit u. If however, the pressure behind the piston b, that is to say, in the second compartment, sinks below 15 kg. the spring z will push the piston x toward the right, the conduit y is brought into communication with the conduit u and consequently the body a is in communication with the atmosphere. The depression immediately produced behind the piston b, causes the latter to be pushed toward the right (Fig. 3) with the maximum of intensity, and the hole o of the partition n to be closed by disk l' in order to stop the output.

Only one opening corresponding to one conical rod, has been shown for the piston, as well as for the partitions, but it is obvious, more particularly for apparatus of large dimensions, that each partition, as well as membranes of the piston b, may be provided with several holes, one rod corresponding to each of the said holes. In this case, as the sum of the cross-sections of the holes of each partition or piston must be of course equal to the cross-section of the single hole, the cross-sections of the conical rods would be reduced accordingly.

The rods f, j, m and s have been described as being conical, but theoretically this is inaccurate, as the generatrix of the said rods must be a curve, so that the cross-section of the three annular orifices should be always exactly in inverse ratio to the pressure. Moreover, in practice, the conical portion of the said rods is given a length which is the greater, the greater is the sensitiveness to be obtained. Finally, the shape of the rods need not be conical or approximately conical; they can be for instance pyramidal or have any other cross-section than circular cross-section, in which case the cross-section of the orifices must be of course a polygon or a figure similar to that of the cross-section of the rods.

Having now particularly described and ascertained the nature of my said invention and in what manner the same is to be performed, I declare that what I claim is:—

1. In a device of the class described, a casing, a piston therein provided with an

opening, a spring bearing against said piston and a stationary member of varying cross section arranged to project into the opening of the piston and to partly close the opening when the spring is compressed, a diaphragm within the casing having an opening therein, and a second member of varying cross section carried by the piston and arranged to project through the opening in the diaphragm for partly closing said opening.

2. In a device of the class described, a casing, a piston therein provided with an opening, a spring bearing against the piston, a diaphragm in the casing having an opening therein, and a plurality of members having ends tapering in opposite directions mounted to partly close the aforesaid openings.

3. In a device of the class described, a casing, a piston therein provided with an opening, a spring bearing against the piston, a diaphragm in the casing having an opening therein, a plurality of members having ends tapering in opposite directions mounted to partly close the aforesaid openings, and a collar on the reduced end of one of the tapering members.

4. In a device of the class described, a casing, a piston therein provided with an opening, a spring bearing against said piston, a stationary member of varying cross section arranged to project into the opening of the piston and partly close the same when the spring is compressed, and a collar on the reduced end of said member adapted to close the opening at times.

5. In a device of the class described, a casing, a piston therein provided with an opening, a spring bearing against said piston, a stationary member of varying cross section arranged to project into the opening of the piston and partly close the same when the spring is compressed, a collar on the reduced end of said member adapted to close the opening at times, and means for connecting one end of the casing with the atmosphere when the pressure is reduced at that end.

In testimony whereof I affix my signature in presence of two witnesses.

JOSEPH JEAN MARIE GUEUX.

Witnesses:
EDMOND JACQUOT,
HANSON C. COXE.