March 14, 1939. C. JACKSON 2,150,326

CONCRETE PLACING APPARATUS

Filed Sept. 16, 1936

Fig. 1.

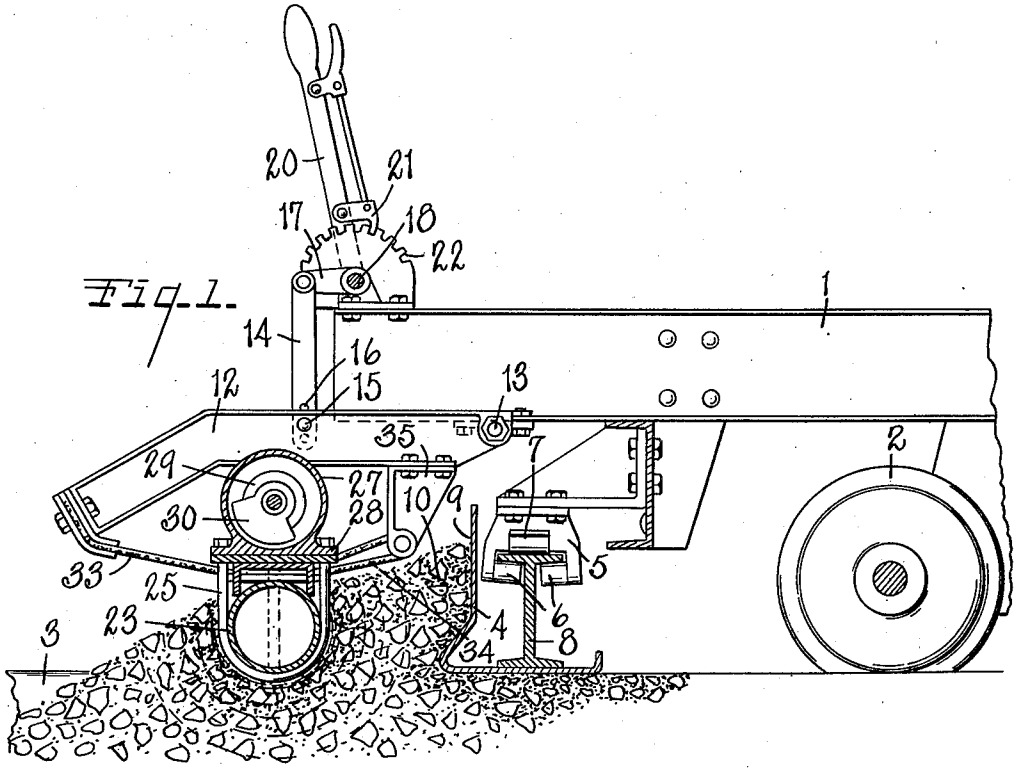

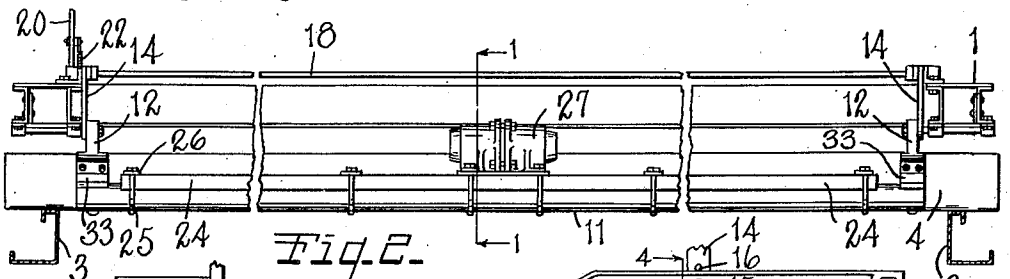

Fig. 2.

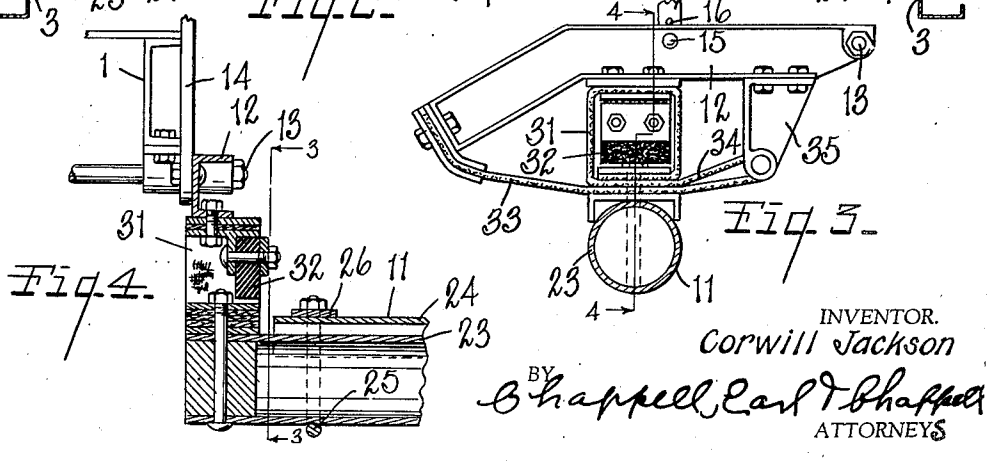

Fig. 4.

Fig. 3.

INVENTOR.
Corwill Jackson
BY
Chappell, Earl & Chappell
ATTORNEYS

Patented Mar. 14, 1939 2,150,326

UNITED STATES PATENT OFFICE

2,150,326

CONCRETE PLACING APPARATUS

Corwill Jackson, Ludington, Mich.

Application September 16, 1936, Serial No. 101,007

15 Claims. (Cl. 94—48)

This invention relates to improvements in concrete placing apparatus.

The main objects of this invention are:

First, to provide a machine for the placement of concrete, such as concrete slabs, pavement, the walls of ditches or conduits, and the like which is highly efficient in the rapid and effective placement of concrete masses, particularly those having large aggregate and of low water content.

Second, to provide a machine of this character which is economical in structure and at the same time very durable.

Third, to provide a machine of this character which has a very wide range of adaptability for the placement of different concrete mixes both in the matter of placement situations and the concrete mixes and the particular conditions or specifications it is desired to meet.

Objects relating to details and economies of the invention will appear from the description to follow. The invention is defined and pointed out in the claims.

A structure which is a preferred embodiment of the invention is illustrated in the accompanying drawing, in which:

Fig. 1 is a fragmentary view partially in section on line 1—1 of Fig. 2 of a machine embodying the features of my invention, certain parts being shown conventionally and no effort being made to maintain the relative proportions of the parts.

Fig. 2 is a fragmentary front elevation, the forms being shown in section.

Fig. 3 is an enlarged detail view in section on line 3—3 of Fig. 4.

Fig. 4 is a detail view in section on line 4—4 of Fig. 3.

In the accompanying drawing, 1 is the frame of a paving machine carriage provided with wheels 2 designed to travel on the forms 3. These parts are shown conventionally.

A screed 4 is mounted for horizontal reciprocatory motion on the supports 5 which are provided with rollers 6, 6 and 7 engaging the tubular flange of the I-beam 8 which is secured on the shoe portion of the screed. The screed is provided with a front wall 9 adapted to support a substantial mass of concrete as indicated at 10. The means for horizontally reciprocating the screed are not illustrated as the manner of reciprocating the screed forms no part of this invention.

At the front of the screed, I mount an elongated vibratory element designated generally by the numeral 11, this being disposed horizontally so that it may be more or less submerged or embedded in the mass of concrete and so that it may be operated in various positions of vertical adjustment relative to the screed.

The supporting and adjusting means in this embodiment comprise forwardly projecting arms 12 which are pivotally mounted on the carriage at 13 and supported for vertical adjustment by means of the links 14 connected to the arms by pins 15, the links being provided with a series of holes 16 to vary the effective length of the links. These links are carried by arms 17 on the rockshaft 18 which is provided with an adjusting lever 20 having a pawl 21 coacting with the toothed segment 22.

In the embodiment illustrated the vibratory element comprises a pipe or tubular member 23 upon which is clamped inverted channel members 24, these members being secured together by means of U-bolts 25 embracing the tubular member and also the channel member, clips 26 being arranged across the top of the channel member.

The vibratory motor 27 is clamped centrally upon the channel member, certain of the U-bolts being arranged through the base 28 of the vibratory motor. This motor is preferably an electric motor, the rotor 29 of which is provided with an unbalancing weight 30 so that high frequency vibrations are produced and imparted to the vibratory element throughout its length.

The vibratory element made up of the members 23 and 24 securely clamped together may be of very considerable length. The applicant has done satisfactory work with the vibratory member having a length of 20 feet, at the same time the vibrations are substantially uniform throughout the entire length of the vibratory member. This vibratory movement imparted with the vibratory element centrally as described necessitates an exceedingly stable or rigid vibratory element—otherwise nodes or dead spots are likely to occur at some point or points in the length of the vibratory element.

To permit the vibratory element to vibrate freely and at the same time translate or carry it forward against a mass of concrete and also to permit it to vibrate in an orbital path which is found to be very desirable, I provide at each end of the vibratory element a flexible hanger 31, any strong belting-like material being found quite satisfactory. These hangers are carried by the arms 12 so that vibratory element is raised and lowered with the arms and is free to vibrate thereon.

Resilient buffers 32 are arranged on the arms to receive the upward thrust of the vibratory element and hold it yieldingly to the work while permitting the vibratory movement thereof. These buffers are preferably rubber blocks.

Front and rear combined draft and guy members 33, 34 are provided, the forward end of the portion 33 being attached to the forward ends of the arms 12 while the rear ends of the portion 34 are attached to the depending brackets 35 on the arms 12. These flexible draft and guy members support the vibratory element in its upright position and in proper relation to the screed and as the machine is advanced against the concrete it is more or less embedded therein depending upon the mass of concrete in front of the screed. This forms an effective support for the vibratory element and permits it to vibrate at high frequency throughout and so that its vibratory movement may take an orbital path and does take such path when the vibrations are imparted thereto by a vibratory motor of the character illustrated—that is, a motor having an unbalancing weight.

I have not illustrated the electrical connections for the motor as it will be understood that suitable electrical connections must be provided. While I preferably employ an electric motor, the vibratory means may be driven from other sources of power.

The screed is designed to travel along on top of the forms as is indicated and concrete, after being subjected to the treatment of the vibratory element, is very effectively placed and smoothed out by the screed so that a single passage of the machine over the concrete is usually effective.

The machine is especially designed by me for the practice of the method of my Patent No. 1,787,449, dated January 6, 1931. It is however adapted and desirable for placing concrete varying widely in moisture contents and in aggregate. The vibrating element may be raised and lowered to meet varying conditions of the concrete mix and to produce the desired condition when acted upon by the screed.

I have illustrated and described my improvements in an embodiment which I have found very practical. I have not attempted to illustrate certain embodiments and adaptations which I contemplate as it is believed that this disclosure will enable those skilled in the art to embody or adapt my improvements as may be desired.

Having thus described my invention, what I claim as new and desire to secure by Letters Patent, is:

1. In a machine of the class described, the combination of a carriage, an elongated submersible vibratory element disposed horizontally and comprising a cylindrical tubular member, an inwardly facing channel extending substantially the length of said tubular element and fixedly secured thereto, a vibrating motor mounted centrally upon said channel iron, flexible hangers on said carriage attached to said vibratory element, front and rear flexible combined draft and guy members connected to said vibratory element, and resilient buffers for said vibratory element acting to yieldingly sustain the thrust of said vibratory element.

2. In a machine of the class described, the combination of a carriage, an elongated horizontally disposed submersible vibratory element comprising a cylindrical tubular member, an inverted channel extending substantially the length of said tubular element and fixedly secured thereto, a vibrating motor mounted centrally upon said channel iron, forwardly projecting arms pivotally mounted on said carriage, means for vertically adjusting said arms and supporting them in their adjusted position, flexible hangers on said arms attached to the ends of said vibratory element, flexible draft members connected to said vibratory element at the ends thereof, and resilient buffers for said vibratory element mounted on said arms and associated with said hangers to yieldingly sustain the thrust of said vibratory element.

3. In a machine of the class described, the combination of a carriage, an elongated horizontally disposed submersible vibratory element, means for vibrating said vibratory element, forwardly projecting arms pivotally mounted on said carriage, means for vertically adjusting said arms and supporting them in their adjusted position, flexible hangers on said arms attached to the ends of said vibratory element, flexible draft members connected to said vibratory element at the ends thereof, and resilient buffers for said vibratory element mounted on said arms and associated with said hangers to yieldingly sustain the thrust of said vibratory element.

4. In a machine of the class described, the combination of a carriage, an elongated horizontally disposed submersible vibratory element comprising a cylindrical tubular member, an inwardly facing channel extending substantially the length of said tubular element and fixedly secured thereto, a vibrating motor mounted centrally upon said channel iron, flexible hangers on said carriage attached to said vibratory element, flexible draft members connected to said vibratory element, and resilient buffers acting to yieldingly sustain the upward thrust of said vibratory element.

5. In a machine of the class described, the combination of a carriage, an elongated submersible vibratory element disposed horizontally and comprising a cylindrical tubular member, an inwardly facing channel extending substantially the length of said tubular element and fixedly secured thereto, a vibratory motor mounted centrally upon said channel iron, forwardly projecting arms pivotally mounted on said carriage, means for vertically adjusting said arms and supporting them in their adjusted position, and means carried by said arms for supporting said vibratory member permitting vibratory movement thereof in an orbital path while supporting it in operative relation to a mass of concrete.

6. In a machine of the class described, the combination of a carriage, an elongated submersible vibratory element disposed horizontally, means for vibrating said vibratory element at high frequency in an orbital path, forwardly projecting arms pivotally mounted on said carriage, means for vertically adjusting said arms and supporting them in their adjusted position, and means carried by said arms for supporting said vibratory member permitting vibratory movement thereof in an orbital path while supporting it in operative relation to a mass of concrete.

7. In a machine of the class described, the combination of a carriage, an elongated submersible vibratory element disposed horizontally and comprising a cylindrical tubular member, an inwardly facing channel extending substantially the length of said tubular element and fixedly secured thereto, a vibratory motor mounted centrally upon said channel iron, and means carried by said carriage for supporting said vibratory

member permitting vibratory movement thereof in an orbital path while supporting it in operative relation to a mass of concrete.

8. In a machine of the class described, the combination of a carriage, an elongated horizontally disposed submersible vibratory element, a vibratory motor mounted upon said vibratory member, forwardly projecting arms pivotally mounted on said carriage, means for vertically adjusting said arms and supporting them in their adjusted position, and means carried by said arms for supporting said vibratory member permitting vibratory movement thereof while supporting it in submerged relation to a mass of concrete.

9. In a machine of the class described, the combination of a carriage, an elongated horizontally disposed submersible vibratory element, means for vibrating said vibratory element, forwardly projecting arms pivotally mounted on said carriage, means for vertically adjusting said arms and supporting them in their adjusted position, and means carried by said arms for supporting said vibratory member permitting vibratory movement thereof while supporting it in submerged relation to a mass of concrete.

10. In a machine of the class described, the combination of a carriage, an elongated horizontally disposed submersible vibratory element, means for vibrating said vibratory element, forwardly projecting arms pivotally mounted on said carriage, means for vertically adjusting said arms and supporting them in their adjusted position, flexible non-extensible hangers for said vibratory element depending from said arms, and flexible non-extensible draft members connected to the forward ends of said arms and to said vibratory element.

11. In a machine of the class described, the combination of a carriage, an elongated submersible vibratory element disposed horizontally and transversely of the path of travel of the carriage, arms pivotally mounted on said carriage, means for vertically adjusting said arms and supporting them in their adjusted positions, and flexible non-extensible supporting elements for said vibratory element carried by said arms.

12. In a machine of the class described, the combination of a carriage, an elongated horizontally disposed submersible vibratory element disposed transversely relative to the path of travel of the carriage, means for vibrating said vibratory element, flexible non-extensible supporting hangers on said carriage attached to said vibratory element, flexible non-extensible draft members connected to said vibratory element, said draft and hanger members being carried by a vertically swingable support, and means for vertically adjusting said support and maintaining it in its adjusted positions.

13. In a machine of the class described, the combination of a carriage, an elongated horizontally disposed submersible vibratory element disposed transversely relative to the path of travel of the carriage, means for vibrating said vibratory element, flexible non-extensible hangers on said carriage attached to said vibratory element, and means for vertically adjusting said hangers and maintaining them in adjusted positions.

14. In a machine of the class described, the combination of a carriage, an elongated submersible vibratory element disposed horizontally and transversely of the path of travel of the carriage, arms pivotally mounted on said carriage, means for vertically adjusting said arms and supporting them in their adjusted positions, flexible non-extensible hangers for said vibratory element depending from said arms, and resilient buffers for said vibratory element acting to yieldingly sustain the thrust of said vibratory element.

15. In a machine of the class described, the combination of a carriage, an elongated submersible vibratory element disposed horizontally transversely of the path of travel of the carriage and comprising a cylindrical tubular member and an inwardly facing channel extending substantially the length of said tubular element and fixedly secured thereto, a vibratory motor mounted on said vibratory element and directly secured to both members thereof, and means carried by said carriage for supporting said vibratory member permitting vibratory movement thereof while supporting it in submerged relation to a mass of concrete.

CORWILL JACKSON.