US00D922950S

(12) United States Design Patent

Tachibana et al.

(10) Patent No.: US D922,950 S
(45) Date of Patent: ** Jun. 22, 2021

(54) **INVERTER**

(71) Applicant: **Mitsubishi Electric Corporation**, Tokyo (JP)

(72) Inventors: **Atsuki Tachibana**, Tokyo (JP); **Tetsuo Tanaka**, Tokyo (JP); **Hidenori Suzuki**, Tokyo (JP); **Yukihiro Maenosono**, Tokyo (JP)

(73) Assignee: **Mitsubishi Electric Corporation**, Tokyo (JP)

(**) Term: **15 Years**

(21) Appl. No.: **29/722,863**

(22) Filed: **Feb. 3, 2020**

(30) **Foreign Application Priority Data**

Sep. 9, 2019 (JP) 2019-020093

(51) **LOC (13) Cl.** **13-02**

(52) **U.S. Cl.**
USPC **D13/110**

(58) **Field of Classification Search**
USPC D13/110, 101, 107, 108, 118, 123, 162, D13/164, 184, 199
CPC H02M 7/00; H02M 7/02; H02M 7/003; H05K 5/00; H05K 5/0017; H05K 7/00; H05K 7/1427; H05K 7/20918
See application file for complete search history.

(56) **References Cited**

U.S. PATENT DOCUMENTS

4,620,263 A * 10/1986 Ito H05K 7/20918 361/690
5,497,289 A * 3/1996 Sugishima H02M 7/003 318/558
D372,017 S * 7/1996 Suematsu D13/110
D455,399 S * 4/2002 Imamura D13/110
6,521,848 B2 * 2/2003 Shibata ..... H01H 9/26 200/5 R
D494,132 S * 8/2004 Song D13/110
D527,611 S * 9/2006 Sato D8/307
D558,141 S * 12/2007 Kwon, Il D13/110
D569,795 S * 5/2008 Higuchi D13/110
D627,725 S * 11/2010 Gebert D13/118
D675,565 S * 2/2013 Choi D13/110
D684,533 S * 6/2013 Nakahira D13/110
D707,176 S * 6/2014 Choi D13/110
D745,847 S * 12/2015 Ho D13/110

* cited by examiner

Primary Examiner — Derrick E Holland
(74) *Attorney, Agent, or Firm* — Studebaker & Brackett PC

(57) **CLAIM**

The ornamental design for an inverter, as shown and described.

DESCRIPTION

FIG. **1** is a front perspective view of the front, right, and top sides of an inverter showing our new design;
FIG. **2** is a rear perspective view of the rear, left, and bottom sides thereof;
FIG. **3** is a front view thereof;
FIG. **4** is a rear view thereof;
FIG. **5** is a top plan view thereof;
FIG. **6** is a bottom plan view thereof;
FIG. **7** is a right side view thereof; and,
FIG. **8** is a left side view thereof.
The broken lines shown represent portions of the inverter and form no part of the claimed design.

1 Claim, 8 Drawing Sheets

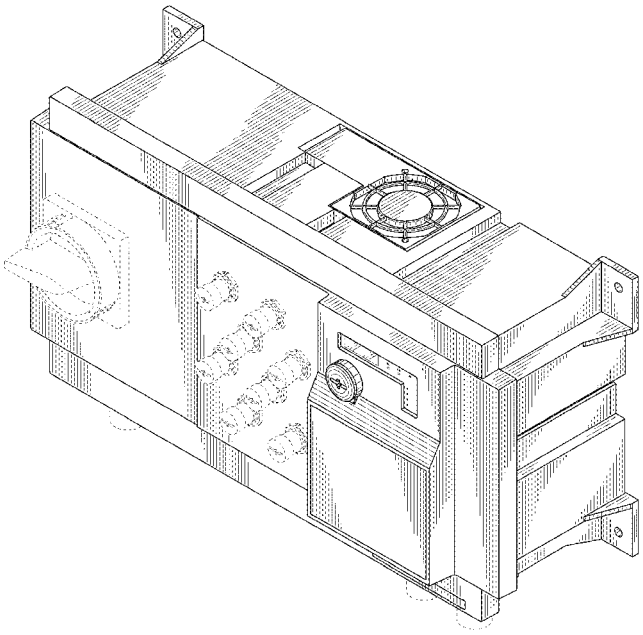

FIG. 1

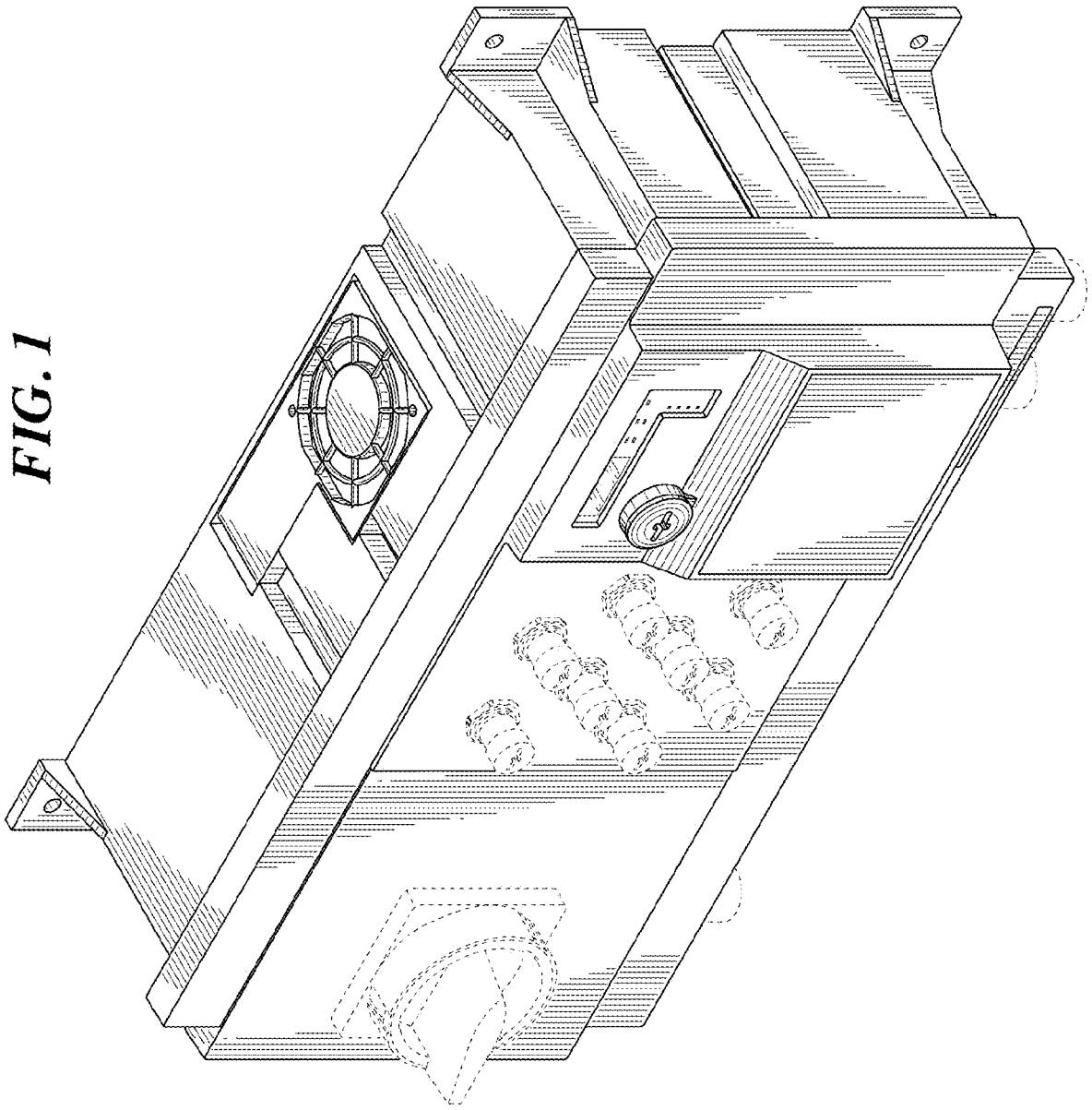

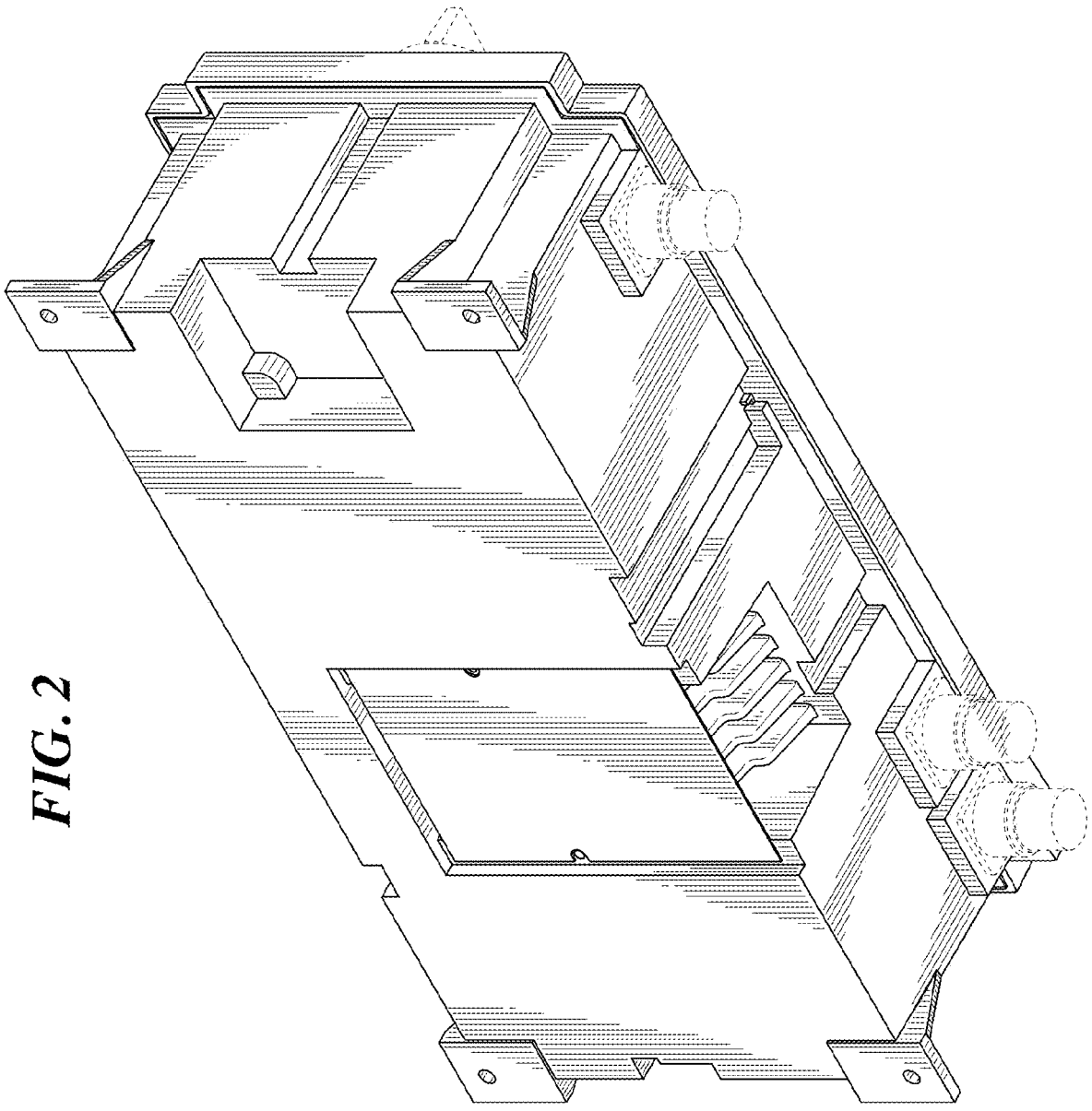

FIG. 2

FIG. 3

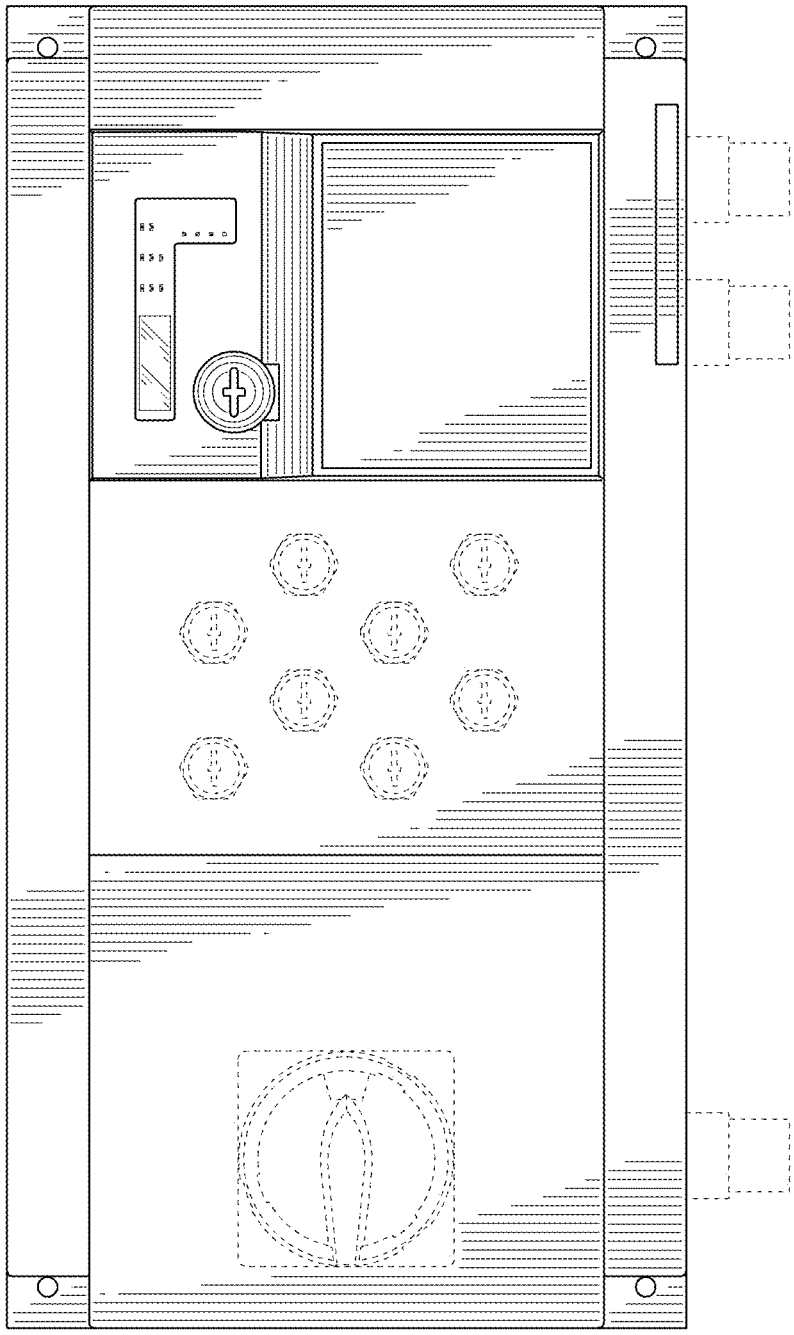

FIG. 4

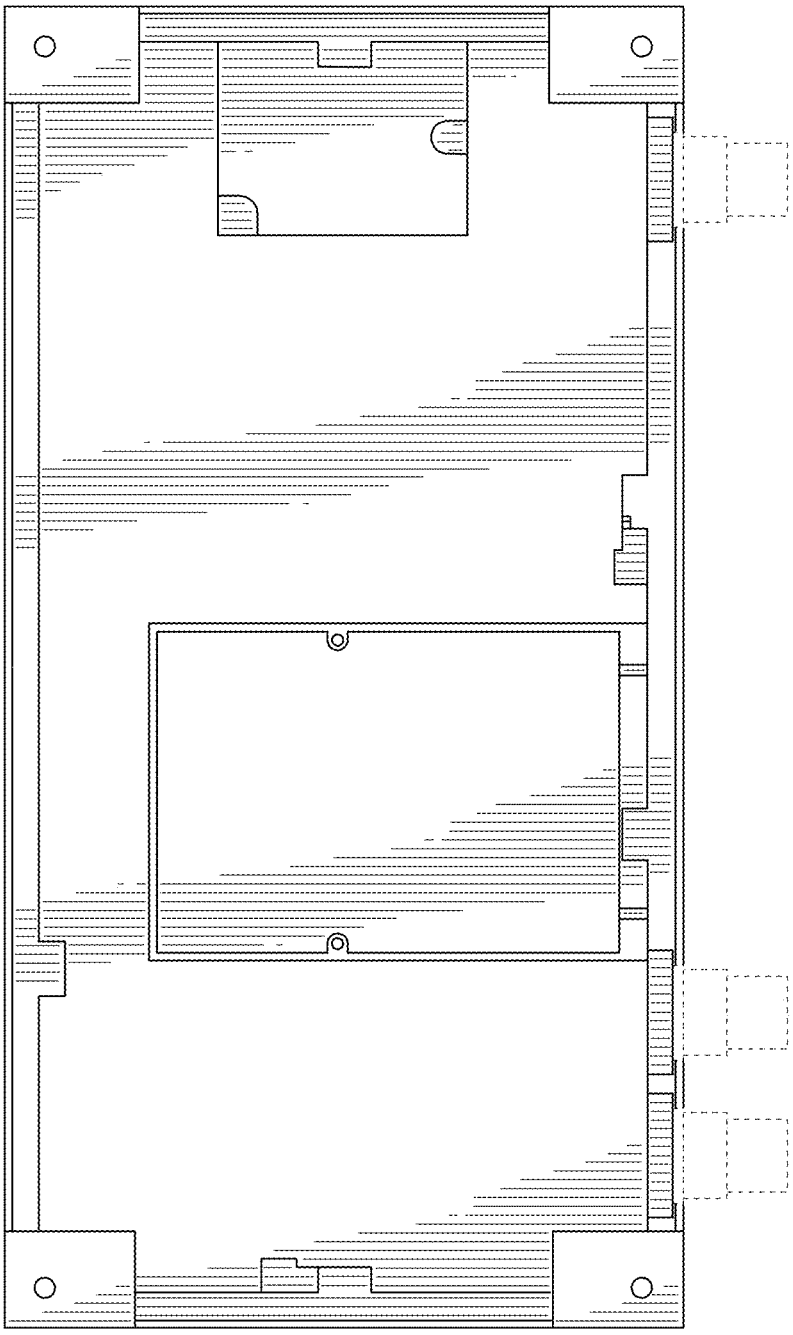

FIG. 5

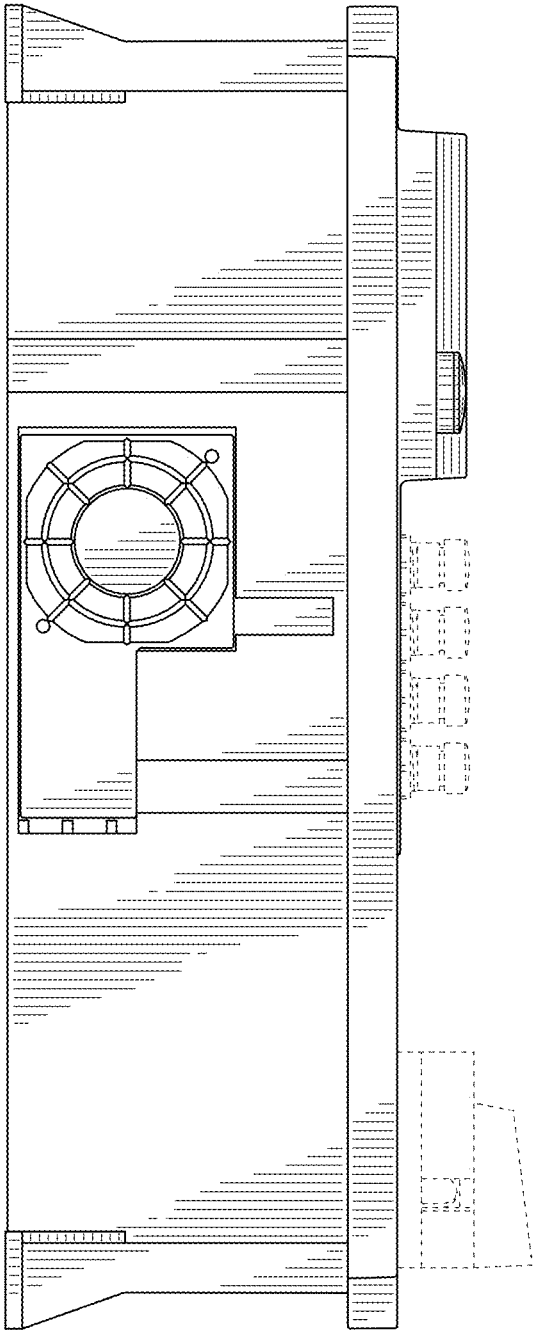

FIG. 6

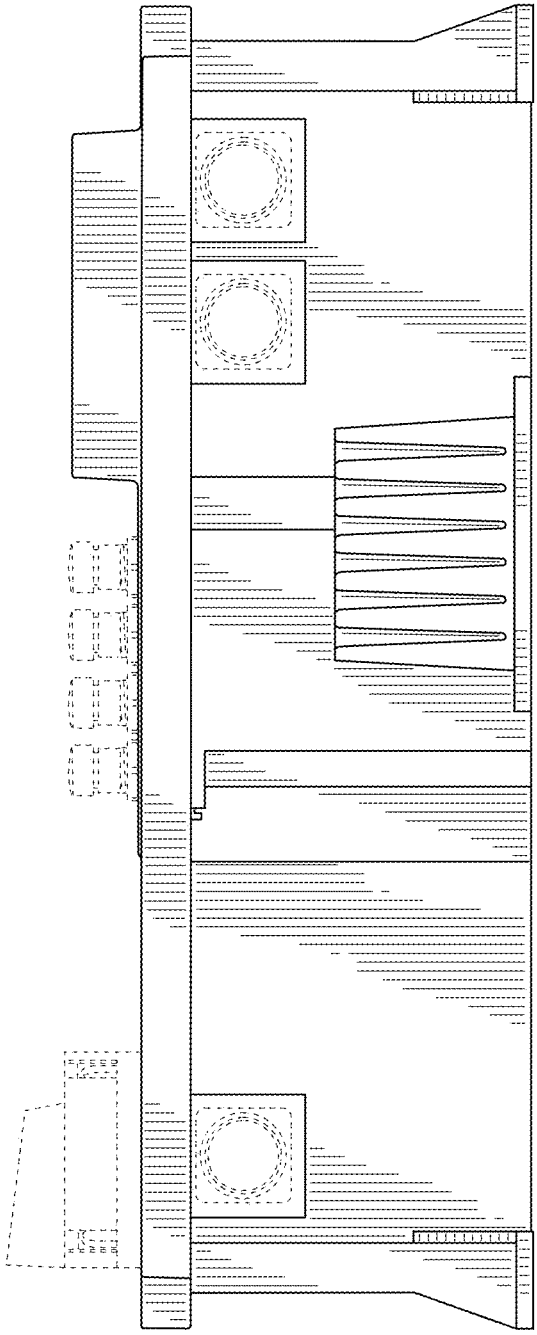

FIG. 7

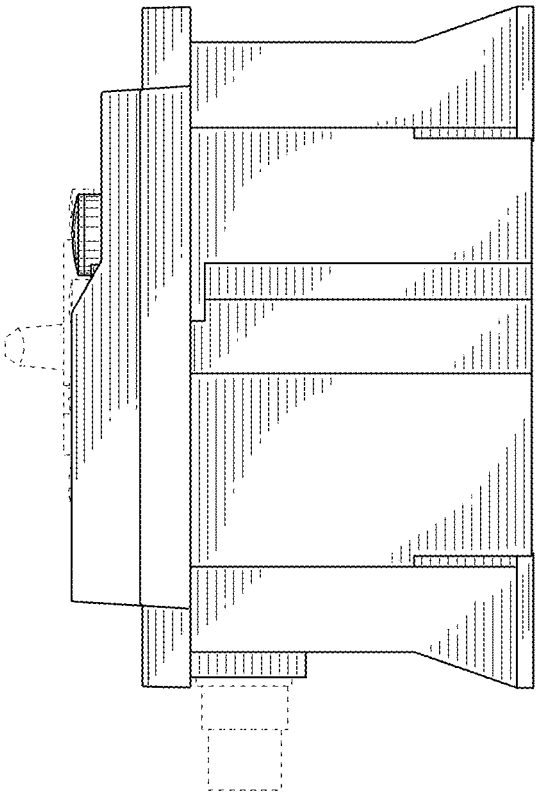

FIG. 8

