Feb. 27, 1968 P. RADKOWSKI ET AL 3,371,299

TRANSFORMER APPARATUS COOLING SYSTEM

Filed Feb. 10, 1966 2 Sheets-Sheet 1

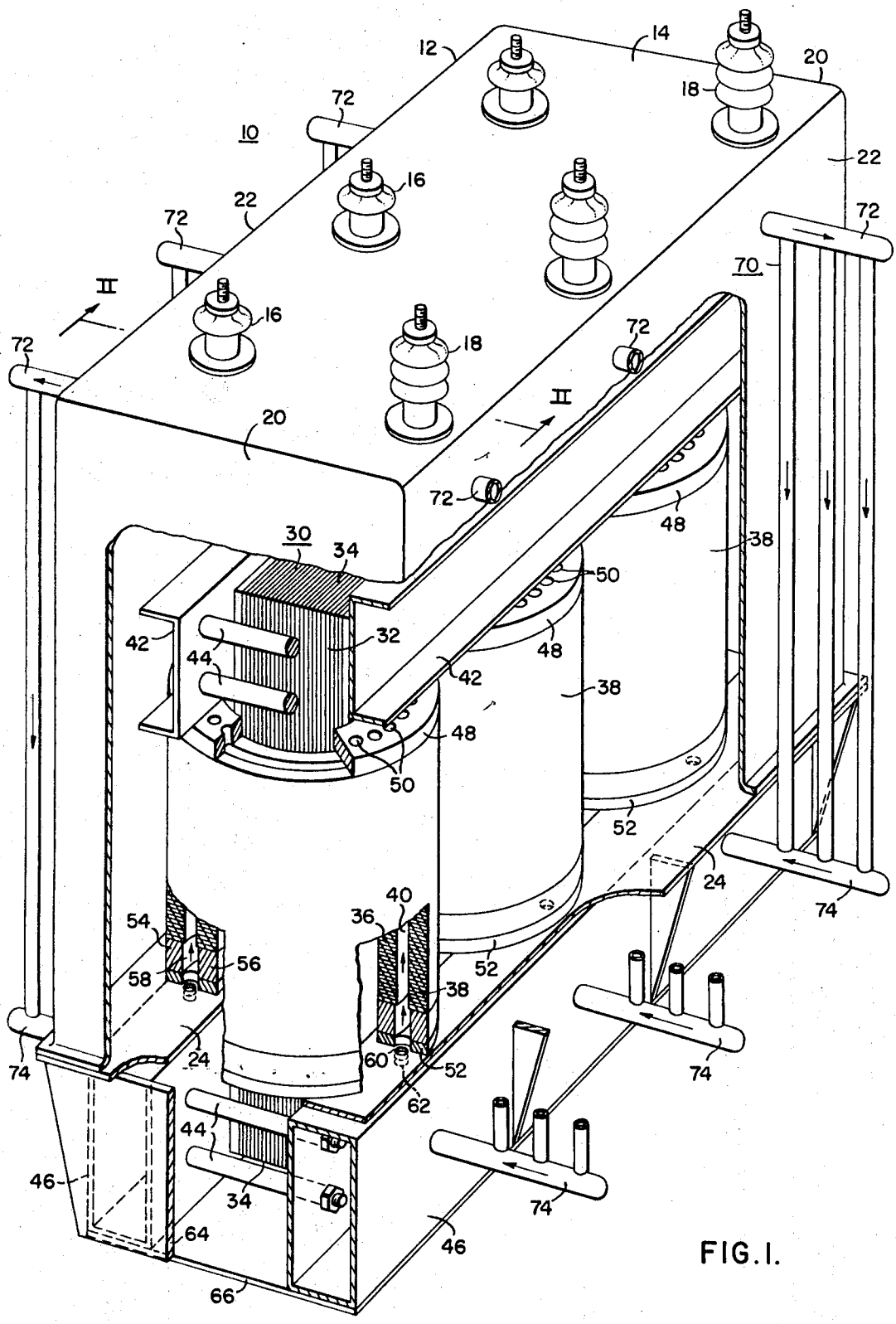

FIG. 1.

Feb. 27, 1968 P. RADKOWSKI ET AL 3,371,299

TRANSFORMER APPARATUS COOLING SYSTEM

Filed Feb. 10, 1966

2 Sheets-Sheet 2

FIG. 2.

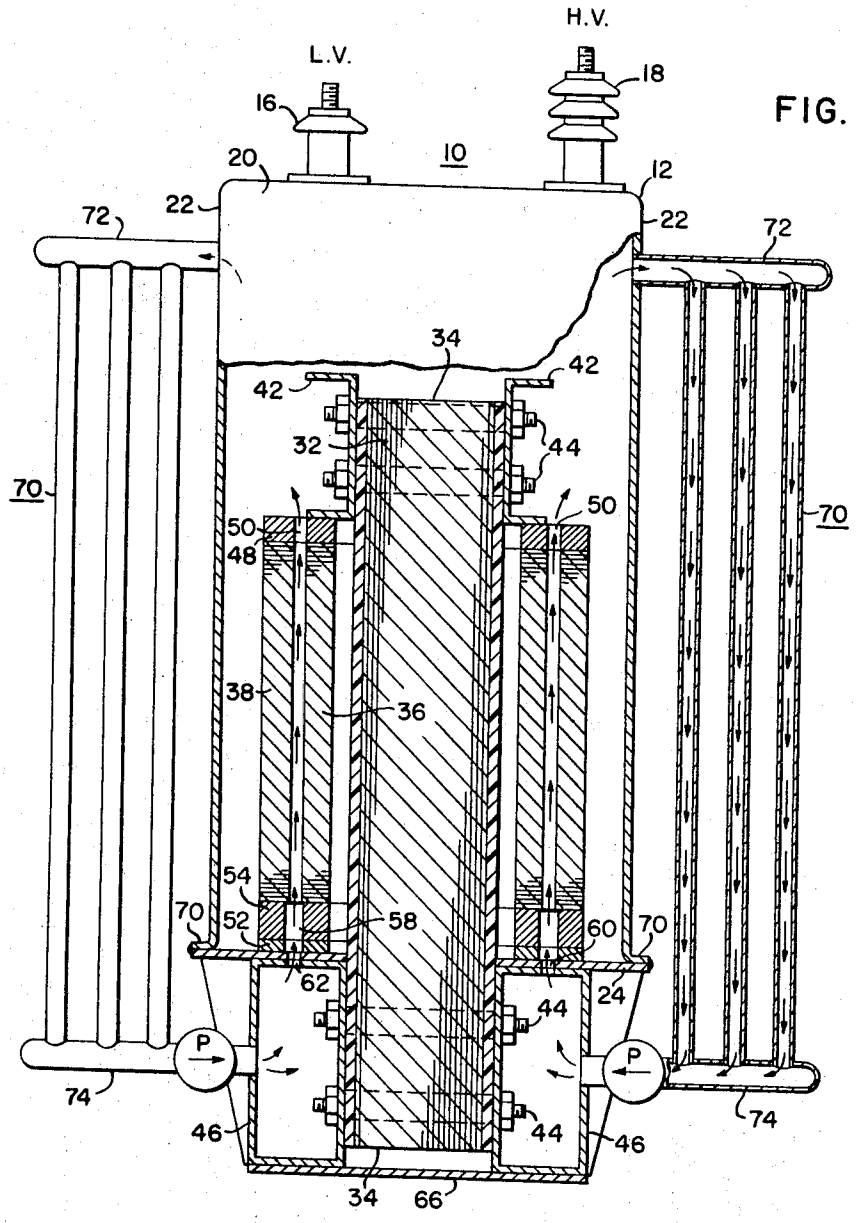

WITNESSES

Edwin E. Bassler

James F. Young

INVENTORS

Leo Radkowski &

Paul Radkowski

BY

J. E. Browder

ATTORNEY

United States Patent Office 3,371,299
Patented Feb. 27, 1968

3,371,299

TRANSFORMER APPARATUS COOLING SYSTEM

Paul Radkowski, Pulaski, and Leo Radkowski, Sharon, Pa., assignors to Westinghouse Electric Corporation, Pittsburgh, Pa., a corporation of Pennsylvania

Filed Feb. 10, 1966, Ser. No. 526,623
5 Claims. (Cl. 336—57)

This invention relates to power transformers of the core form type, and more particularly to an improved housing and cooling system for power transformers of the core form type.

It is an object of this invention to provide an improved power transformer of the core form type wherein the primary and secondary coils or windings of the transformer are concentric, and cooling fluid is circulated between the concentric coils or windings to provide cooling of the coils or windings.

It is another object of the present invention to provide an improved and lower cost housing for power transformers of the core form type.

It is another object of the present invention to provide an improved transformer of the core form type wherein definite ducts are provided for circulating cooling fluid from the top of the housing or casing back to the bottom of the housing or casing and up through the coils or windings of the transformer to provide cooling of the coils or windings.

It is also another object of the present invention to provide an improved transformer of the core form type wherein a manifold to which a cooling fluid is returned from the top of the transformer housing or casing to the bottom of the housing or casing also provides a bottom support for the transformer housing.

These and other objects are effected by this invention as will be apparent from the following description taken in accordance with the accompanying drawings, forming a part of this application, in which:

FIGURE 1 is a perspective view of a core form transformer constructed according to this invention, with parts broken away for the purpose of clarity; and

FIG. 2 is a cross sectional view of the transformer similar to the transformer illustrated in FIG. 1, with the exception that pumps are illustrated for circulating a cooling fluid.

In the prior art it has been the practice to construct power transformers of the core form type with concentric primary and secondary coils or windings. This type of transformer is usually cooled with some type of fluid coolant. In the prior art it has been the practice to circulate the hot cooling fluid from the top of the transformer housing through external coolers to cool the fluid and return the cooled fluid coolant to the bottom of the transformer housing. In order to make this cool fluid coolant recirculate up through the concentric windings to cool the windings it was necessary to provide extensive baffling in the bottom of the transformer tank. This baffling was usually constructed from cellulosic pressboard. It has been found from prior experience that after extensive use that this baffling often became ineffective to direct the cooling fluid up through the concentric windings due to the deterioration of the pressboard with age. This method of directing the cool cooling fluid up through the concentric windings was also expensive since the pressboard used has to be a good grade of electrical insulating cellulosic material which meant that the material was expensive and it also required extensive labor to properly construct the baffling during the assembly of the transformer.

This invention provides a transformer of the core form type having concentric cores or windings wherein an efficient cooling system is provided which eliminates the above pointed out objections to the prior art systems.

Referring to FIG. 1 in detail, a three-phase core form transformer **10** is illustrated. The transformer **10** includes a housing or casing **12** which is comprised of a top wall **14** through which low voltage bushings **16** and high voltage bushings **18** extend. The casing **12** also comprises two end walls **20**, two side walls **22** and a bottom wall **24**. The transformer **10** illustrated in FIG. 1 is a three-phase power transformer and includes a laminated magnetic core **30** having three winding legs **32** and two yoke portions **24** connecting the winding legs **32**. A set of windings comprising concentric low voltage winding **36** and high voltage windings **38** are fitted over each of the winding legs **32** of the core **30**. It is seen that the concentric windings **36** and **38** are spaced from each other to provide a duct **40** therebetween for circulating cooling fluid. The core is held in assembled relationship by means of two frame members **42** which are clamped to the top yoke member **34** by means of clamping bolts **44**. The bottom yoke member of the core is clamped between two hollow manifold members **46** by means of bolts **44**. The hollow members **46** in addition to serving as the lower frame members for holding the lower yoke portion **34** of the core **30** in assembled relationship; but, also, as will be pointed out hereinafter functions as manifolds for the return of the cool cooling fluid to the bottom of the transformer housing **12**.

As seen in FIG. 1 a cooling fluid distribution ring **48** is placed between the upper ends of the windings **36** and **38** and the upper frame members **42**. The cooling fluid distribution rings **48** have a series of openings **50** therein for evenly distributing the cooling fluid as it is forced up between the windings **36** and **38**. It is also seen from FIG. 1 that a similar fluid distribution ring **52** is placed between the ends adjacent the bottom wall **24** of the housing or enclosure **12**. However, between the ring **52** and the ends of the windings **36** and **38** there is positioned an oil distribution ring which comprises two concentric rings **54** and **56**. The rings **54** and **56** have an opening **58** therebetween which evenly distributes the cooling fluid as it starts up through the opening **40** between the windings **36** and **38**. It is seen that the ring **52** has openings therein which correspond or match with openings **60** in the bottom wall **24** of the tank **12**. These openings **60** in the bottom wall **24** of the tank **12** also match openings **62** in the top of each of the manifold members **46**. The ends of the manifold members are closed by plates **64** which are attached thereto to provide a fluid tight connection between the ends of the manifold members **46** and the plates **64**.

A metal plate member **66** is attached, by welding or some other means, to the bottom side of the two manifold members **46** to provide a smooth base support for the transformer **10**. As seen from the description hereinbefore the manifold members **46** serve the dual purpose of providing frame members for holding the lower yoke portion **34** of the core **30** in assembled relationship and also provide a bottom support for the entire transformer **10** and provide means for returning the cooling fluid to the bottom of the transformer housing and directing the cooling fluid up through the opening **40** between the concentric windings **36** and **38** to efficiently cool the windings of the transformer. With this arrangement it is seen that no ducting or baffling with cellulosic material is necessary inside the transformer housing or casing **12**.

In the operation of the transformer the entire housing or casing **12** is usually filled with a cooling fluid such as oil or a suitable gas, with the exception of an air space at the top of the housing. It is seen from FIG. 1 that a plurality of coolers **70** is attached to the casing **12** on each side thereof near the top by means of a pipe **72** and near

the bottom by means of a pipe **74**. These coolers permit the circulation of the cooling fluid from near the top of the casing **12** down through the coolers **70** in the direction indicated by the arrows thereon to the lower pipes **74** and from the lower pipes **74** into the main headers **46** where it is then forced through the openings **62** and **60** into the ducts **40** between the concentric windings **36** and **38** and up through the coils or windings **36** and **38** where it is again forced from the openings **50** in the upper distribution rings **48**. This arrangement provides a positive and direct duct system for directing the cooling fluid from near the top of the transformer casing **12** back to the bottom of the casing and up through the space **40** between the concentric windings **36** and **38** and around the windings **36** and **38**. This structure not only provides an efficient cooling system for a core form transformer utilizing concentric windings, but also provides a system which is cheaper that the prior art systems since it is not necessary to provide baffling with cellulosic material inside the transformer casing or housing **12** to obtain proper circulation of the cooling fluid to cool the transformer. If desired coolers of the type illustrated by the reference character **70** might also be attached to the end plates **64** to provide additional cooling of the fluid coolant.

The structure described herein also further permits more economical construction than the prior art since it is seen that the entire transformer may be assembled on the bottom wall **24** which has been positioned on top of the manifold members **46** and then the upper portion of the housing **12** may be lowered over the transformer and the flange **70** welded to the bottom wall **24** of the transformer with any suitable welding equipment.

FIG. 2 is a cross sectional view of a transformer utilizing the present invention. FIG. 2 may be considered as being taken along line II—II of FIG. 1. The transformer in FIG. 2 is identical to that shown in FIG. 1, except that pumps P have been illustrated in the lower pipes **74** of the coolers **70** for force circulating the cooling fluid from near the top of the transformer casing **12** back to the manifolds **46** and up through the openings **40** between concentric windings **36** and **38**. In all other respects the transformer illustrated in FIG. 2 is identical to that illustrated in FIG. 1.

As pointed out hereinbefore, the transformer illustrated in FIGS. 1 and 2 provides an improved transformer wherein the lower frame members **46** for the lower yoke portion **34** of the core **30** also provides manifolds for receiving the cooled cooling fluid when it is returned from near the top of the transformer casing **12** and positive duct

means are provided for conducting this cooled cooling fluid from the manifold members **46** up through a fluid distribution ring **52** and up through the opening **40** between the concentric windings **36** and **38** to and around the windings **36** and **38** to cool the windings **36** and **38**. This structure is also more economical to manufacture than the prior art structures, since no internal baffling is required inside of the casing or housing **12**.

Although this invention has been described in connection with a three phase core form type transformer it is understood that it may be incorporated in any size or phase core form type transformer with the attendant advantages described.

While we have shown our invention in only one form it will be obvious to those skilled in the art that it is not so limited, but is susceptible to various changes and modifications without departing from the spirit thereof.

We claim as our invention:

1. A transformer comprising a magnetic core having a winding leg, concentric windings on said winding leg, said concentric windings having a duct therebetween, a housing enclosing said core and said windings, said housing including a bottom wall for supporting said windings, manifold means below said bottom wall, fluid coolant in said housing for cooling said windings, means for conducting said fluid coolant from said housing to said manifold means, and means for directing said fluid coolant from said manifold means through said duct between said concentric windings.

2. The transformer as claimed in claim **1** wherein said manifold means provides a frame for said magnetic core.

3. The transformer as claimed in claim **1** wherein said manifold provides a support for said transformer.

4. The transformer as claimed in claim **1** wherein said means for directing said coolant fluid from said manifold means through said duct between said concentric windings comprises a fluid distribution ring for uniformly distributing the fluid between said concentric windings.

5. The transformer as claimed in claim **1** wherein said magnetic core has three winding legs with concentric windings on each said leg.

References Cited

UNITED STATES PATENTS

3,137,829 6/1964 Dillow et al. ---------- 336—57

LARAMIE E. ASKIN, *Primary Examiner.*

D. A. TONE, *Assistant Examiner.*